Appendix D

USFWS

Mowing a woodcock roosting area on the Nulhegan Basin Division

Findings of Appropriateness and Compatibility Determinations

Findings of Appropriateness and Compatibility Determinations

Finding of Appropriateness—All-terrain Vehicles and Other Off-road Vehicles D-1

Finding of Appropriateness—Manned and Unmanned Aircraft Use for Recreational or Commercial Purposes D-5

Finding of Appropriateness—Target Shooting D-9

Finding of Appropriateness—Camping Along the Nulhegan River in Support of the Northern Forest Canoe Trail D-13

Compatibility Determination—Camping Along the Nulhegan River in Support of Northern Forest Canoe Trail D-15

Finding of Appropriateness—Commercial Forestry for Habitat Management D-25

Compatibility Determination—Commercial Forestry for Habitat Management D-27

Finding of Appropriateness—Commercial Guiding for Wildlife-dependent Recreation D-39

Compatibility Determination—Commercial Guiding for Wildlife-dependent Recreation D-41

Finding of Appropriateness—Commercial Haying to Manage Grassland Habitat D-49

Compatibility Determination—Commercial Haying to Manage Grassland Habitat D-51

Finding of Appropriateness—Non-traditional Geocaching D-63

Compatibility Determination—Non-traditional Geocaching D-65

Finding of Appropriateness—Pet Walking D-75

Compatibility Determination—Pet Walking D-77

Finding of Appropriateness—Privately Owned Recreational Cabins at the Nulhegan Basin Division D-85

Compatibility Determination—Privately Owned Recreational Cabins at the Nulhegan Basin Division D-87

Finding of Appropriateness—Research Conducted by Non-Service Personnel D-101

Compatibility Determination—Research Conducted by Non-service Personnel D-103

Finding of Appropriateness—Recreational Gathering of Blueberries, Blackberries, Strawberries, Raspberries, Mushrooms, Fiddleheads, and Antler Sheds D-117

Compatibility Determination—Recreational Gathering of Blueberries, Blackberries, Strawberries, Raspberries, Mushrooms, Fiddleheads, and Antler Sheds D-119

Finding of Appropriateness—Snowmobiling on Designated Snowmobile Trails on the Dead Branch Division D-129

Compatibility Determination—Snowmobiling on Designated Snowmobile Trails on the Dead Branch Division D-133

Finding of Appropriateness—Snowmobiling on Designated Snowmobile Trails on the Nulhegan Basin Division . . . D-147

Compatibility Determination—Snowmobiling on Designated Snowmobile Trails on the Nulhegan Basin Division . . D-149

Finding of Appropriateness—Snowmobiling on Designated Snowmobile Trails on the Pondicherry Division D-169

Compatibility Determination—Snowmobiling on Designated Snowmobile Trails on the Pondicherry Division D-171

Compatibility Determination—Furbearer Management (Trapping) on the Nulhegan Basin Division D-187

Compatibility Determination—Hunting on Silvio O. Conte Refuge Lands in Vermont D-211

Compatibility Determination—Interpretation, Environmental Education, Wildlife Observation, and Wildlife Photography D-231

List of Figures

Figure D.1. Acceptable Impact Thresholds for Camping. D-23

List of Maps

Map D.1. Proposed Northern Forest Canoe Trail Campsite at Nulhegan Basin Division. D-22

Map D.2. Mowed and hayed fields at the Fort River Division of the Silvio O. Conte National Fish and Wildlife Refuge. D-53

Map D.3. Mowed Fields at the Pondicherry Division of the Silvio O. Conte National Fish and Wildlife Refuge. D-54

Map D.4. Snowmobile Trail at Dead Branch Division. D-134

Map D.5. Proposed Snowmobiling Trails at the Nulhegan Basin Division. D-168

Map D.6. Snowmobile Trails at Pondicherry Division. D-173

FWS Form 3-2319 02/06

FINDING OF APPROPRIATENESS OF A REFUGE USE

Refuge Name: Silvio O. Conte National Fish and Wildlife Refuge

Use: All-terrain Vehicles and Other Off-road Vehicles

This form is not required for wildlife-dependent recreational uses, take regulated by the State, or uses already described in a refuge CCP or step-down management plan approved after October 9, 1997.

Decision Criteria:	**YES**	**NO**
(a) Do we have jurisdiction over the use?	✔	
(b) Does the use comply with applicable laws and regulations (Federal, State, Tribal, and local)?		✔
(c) Is the use consistent with applicable Executive orders and Department and Service policies?		✔
(d) Is the use consistent with public safety?	✔	
(e) Is the use consistent with goals and objectives in an approved management plan or other document?		✔
(f) Has an earlier documented analysis not denied the use or is this the first time the use has been proposed?		✔
(g) Is the use manageable within available budget and staff?		✔
(h) Will this be manageable in the future within existing resources?		✔
(i) Does the use contribute to the public's understanding and appreciation of the refuge's natural or cultural resources, or is the use beneficial to the refuge's natural or cultural resources?		✔
(j) Can the use be accommodated without impairing existing wildlife-dependent recreational uses or reducing the potential to provide quality (see section 1.6D, 603 FW 1, for description), compatible, wildlife-dependent recreation into the future?		✔

Where we do not have jurisdiction over the use ["no" to (a)], there is no need to evaluate it further as we cannot control the use. Uses that are illegal, inconsistent with existing policy, or unsafe ["no" to (b), (c), or (d)] may not be found appropriate. If the answer is "no" to any of the other questions above, we will **generally** not allow the use.

If indicated, the refuge manager has consulted with State fish and wildlife agencies. Yes ____ No ✔.

When the refuge manager finds the use appropriate based on sound professional judgment, the refuge manager must justify the use in writing on an attached sheet and obtain the refuge supervisor's concurrence.

Based on an overall assessment of these factors, my summary conclusion is that the proposed use is:

Not Appropriate ✔ **Appropriate** ____

Refuge Manager: _____ Date: _____

If found to be **Not Appropriate**, the refuge supervisor does not need to sign concurrence if the use is a new use.

If an existing use is found **Not Appropriate** outside the CCP process, the refuge supervisor must sign concurrence.

If found to be **Appropriate**, the refuge supervisor must sign concurrence:

Refuge Supervisor: _____ Date: _____

A compatibility determination is required before the use may be allowed.

JUSTIFICATION FOR A FINDING OF APPROPRIATENESS OF A REFUGE USE

Refuge Name: Silvio O. Conte National Fish and Wildlife Refuge

Use: All-terrain Vehicles and Other Off-road Vehicles[1]

NARRATIVE:

As part of the Comprehensive Conservation Plan (CCP) planning process for Silvio O. Conte National Fish and Wildlife Refuge (Conte Refuge, refuge), refuge staff have evaluated all existing or requested non-priority public uses to determine if they are an appropriate use for the refuge. The use of all-terrain vehicles (ATVs) and other off-road vehicles, such as dirt bikes, is a not a priority public use of the National Wildlife Refuge System (Refuge System), as defined under the National Wildlife Refuge System Administration Act of 1966 (16 U.S.C. 668dd-668ee), as amended by the National Wildlife Refuge System Improvement Act of 1997 (Public Law 105-57). The use of ATVs and other off-road vehicles on the refuge does not contribute to any priority public uses. This finding of appropriateness also covers the off-road use of bicycles, cars, and motorcycles. Although these vehicles are allowed on designated refuge roads, they are not allowed off of these roads.

Based on our evaluation, we have found the use of ATVs and other off-road vehicles is not appropriate at Conte Refuge for the reasons listed below.

- ATVs are specifically prohibited by Federal regulations at the refuge's Pondicherry Division (50 CFR §32.48) and Nulhegan Basin Division (50 CFR §32.65).

- ATV use on the refuge is not consistent with Executive Order 11989, which requires the Service to close areas to ATVs when we determine the use causes or will cause considerable adverse impacts on soils, vegetation, wildlife, habitats, or cultural and historic resources.

- ATV and other off-road vehicle use has the potential to disturb migratory birds, other wildlife species, and refuge visitors because they can be used throughout much of the year and are capable of traveling at high speeds, causing damage to vegetation, soils and habitats (Marion and Olive 2006; Meadows et al. 2008). ATVs and other off-road vehicles can cause considerable soil compaction and erosion and negatively impact habitats' natural hydrology by creating ruts in roads and trails, particularly during wet and muddy conditions (Meyer, 2002), leading to soil erosion and siltation in refuge streams and wetlands. These types of vehicles can also damage refuge habitats and native plant communities by crushing and killing vegetation. Disturbance to wildlife and damage to soils and vegetation from ATVs and other off-road vehicles can be widespread because they are designed to, and generally are, used off roads and trails. Given many of the aforementioned factors, monitoring data demonstrates that trail impacts related to ATV use tend to be substantially greater than other forms of non-motorized trail uses (Marion and Olive 2006). Although snowmobiles are similar to ATVs and other off-road vehicles, the impacts of ATVs and other off-road vehicles on soils, vegetation, and wildlife are generally higher. This is because ATVs and other off-road vehicles can be used throughout much of the year, whereas snowmobiles are only used during the winter when soils are covered with snow and frozen and outside the growing and breeding season for most plants and wildlife. Also, on the Conte Refuge, snowmobiles are confined to designated, groomed trails—the majority of these trails follow the existing road network.

[1] This finding of appropriateness does not cover the use of snowmobiles; please see the separate finding of appropriateness and compatibility determinations for snowmobiling at the refuge's Nulhegan Basin, Pondicherry, and Dead Branch Divisions. Snowmobiling is only allowed on designated snowmobile trails on these divisions.

- The use of ATVs and other off-road vehicles can conflict with other existing wildlife-dependent recreational uses. These vehicles may disturb wildlife and cause animals to flush, thus affecting visitors engaged in priority public uses, such as wildlife observation, photography, and fishing. ATVs and other off-road vehicles also have the potential to cause damage to refuge habitats and decrease the quality of other visitors' experiences and their ability to engage in wildlife-dependent priority public uses. These issues are greatest when ATVs and other users occupy the same areas (e.g., share trails).

- Given the potential to severely damage soils and vegetation, disturb wildlife, and cause conflicts between user groups, ATVs and other off-road vehicles are not consistent with the refuge's goals to protect wildlife, promote environmental education, and support priority public uses, as defined in the Conte Refuge draft CCP/environmental impact statement. Nor is the use consistent with the refuge's purposes. The refuge's purposes are:

  - To conserve, protect, and enhance the Connecticut River populations of Atlantic salmon, American shad, river herring, shortnose sturgeon, bald eagles, peregrine falcons, osprey, black ducks, and other native species of plants, fish, and wildlife.

  - To conserve, protect, and enhance the natural diversity and abundance of plant, fish and wildlife species, and the ecosystem upon which these species depend within the refuge.

  - To protect species listed as endangered or threatened, or identified as candidates for listing, pursuant to the Endangered Species Act of 1973 as amended (16 U.S. 1531 et seq.).

  - To restore and maintain the chemical, physical, and biological integrity of wetland and other waters within the refuge.

  - To fulfill the international treaty obligations of the United States relating to fish and wildlife and wetlands.

  - To provide opportunities for scientific research, environmental education, and fish and wildlife oriented recreation and access to the extent compatible with the other purposes stated in this section.

This finding of appropriateness was distributed for public comment for 90 days from August 18, 2015 to November 16, 2015 as part of the review of the Silvio O. Conte Refuge's draft CCP/EIS. Comments we received on this use were considered as we developed this final determination. A summary of comments received on the draft plan is included in appendix O of the final CCP/EIS. This finding will undergo another 30-day review with release of the final CCP/EIS.

LITERATURE CITED:

Marion J. L. and N. Olive. 2006. Assessing and Understanding Trail Degradation: Results from Big South Fork National River and Recreational Area. National Park Service. Final Research Report. United States Department of the Interior, U.S. Geological Survey, Patuxent Wildlife Research Center, Virginia Tech Field Unit. February 2006.

Meyer K. G. 2002. Managing Degraded Off-Highway Vehicle Trails in Wet, Unstable, and Sensitive Environments. United States Department of Agriculture, Forest Service, Technology and Development Program, Missoula, MT. 2E22A68—NPS OHV Management. October 2002.

Meadows D., Foltz R., and N. Geehan. 2008 Effects of All-Terrain Vehicles on Forested Lands and Grasslands. United States Department of Agriculture, Forest Service, National Technology & Development Program, Recreation Management. 0823 1811—SDTDC. December 2008

FWS Form 3-2319
02/06

FINDING OF APPROPRIATENESS OF A REFUGE USE

Refuge Name: Silvio O. Conte National Fish and Wildlife Refuge

Use: Manned and Unmanned Aircraft Use for Recreational or Commercial Purposes

This form is not required for wildlife-dependent recreational uses, take regulated by the State, or uses already described in a refuge CCP or step-down management plan approved after October 9, 1997.

Decision Criteria:	**YES**	**NO**
(a) Do we have jurisdiction over the use?	✔	
(b) Does the use comply with applicable laws and regulations (Federal, State, Tribal, and local)?		✔
(c) Is the use consistent with applicable Executive orders and Department and Service policies?		✔
(d) Is the use consistent with public safety?		✔
(e) Is the use consistent with goals and objectives in an approved management plan or other document?		✔
(f) Has an earlier documented analysis not denied the use or is this the first time the use has been proposed?		✔
(g) Is the use manageable within available budget and staff?		✔
(h) Will this be manageable in the future within existing resources?		✔
(i) Does the use contribute to the public's understanding and appreciation of the refuge's natural or cultural resources, or is the use beneficial to the refuge's natural or cultural resources?		✔
(j) Can the use be accommodated without impairing existing wildlife-dependent recreational uses or reducing the potential to provide quality (see section 1.6D, 603 FW 1, for description), compatible, wildlife-dependent recreation into the future?		✔

Where we do not have jurisdiction over the use ["no" to (a)], there is no need to evaluate it further as we cannot control the use. Uses that are illegal, inconsistent with existing policy, or unsafe ["no" to (b), (c), or (d)] may not be found appropriate. If the answer is "no" to any of the other questions above, we will **generally** not allow the use.

If indicated, the refuge manager has consulted with State fish and wildlife agencies. Yes ____ No ___✔___.

When the refuge manager finds the use appropriate based on sound professional judgment, the refuge manager must justify the use in writing on an attached sheet and obtain the refuge supervisor's concurrence.

Based on an overall assessment of these factors, my summary conclusion is that the proposed use is:

Not Appropriate ___✔___ **Appropriate** _____

Refuge Manager: _____ Date: _____

If found to be **Not Appropriate**, the refuge supervisor does not need to sign concurrence if the use is a new use.

If an existing use is found **Not Appropriate** outside the CCP process, the refuge supervisor must sign concurrence.

If found to be **Appropriate**, the refuge supervisor must sign concurrence:

Refuge Supervisor: _____ Date: _____

A compatibility determination is required before the use may be allowed.

JUSTIFICATION FOR A FINDING OF APPROPRIATENESS OF A REFUGE USE

Refuge Name: Silvio O. Conte National Fish and Wildlife Refuge

Use: Manned and Unmanned Aircraft Use for Recreational or Commercial Purposes

NARRATIVE:

As part of the Comprehensive Conservation Plan (CCP) process for Silvio O. Conte National Fish and Wildlife Refuge (Conte Refuge, the refuge), refuge staff have evaluated all existing or requested non-priority public uses to determine if they are an appropriate use for the refuge. The use of manned and unmanned aircraft for recreational or commercial purposes on the refuge is not a priority public use of the National Wildlife Refuge System (Refuge System), as defined under the National Wildlife Refuge System Administration Act of 1966 (16 U.S.C. 668dd-668ee), as amended by the National Wildlife Refuge System Improvement Act of 1997 (Public Law 105-57). Manned and unmanned aircraft includes, but not limited to, airplanes, ultralights, hang-gliders, paragliders, parachutes, helicopters, hot air balloons, and other manned aircraft systems, as well as model aircraft/airplanes, powered gliders, drones, motorized aerial vehicles, remotely piloted vehicle (RPV), multicopters (quad-, hexa- and octocopter), and other unmanned aircraft systems.

Based on our evaluation, we have found the landing and launching of manned and unmanned aircraft for recreational or commercial purposes is not appropriate at Conte Refuge for several reasons:

- The landing and launching of aircraft is not consistent with Federal regulations. According to 50 CFR §27.34, "The unauthorized operation of aircraft, including sail planes, and hang gliders, at altitudes resulting in harassment of wildlife, or the unauthorized landing or take-off on a national wildlife refuge, except in an emergency, is prohibited. National wildlife refuge boundaries are designated on up-to-date FAA [Federal Aviation Administration] aeronautical charts."

- There is also clear regulatory guidance that prohibits aircraft use to disturb, or attempt to disturb, wildlife (50 CFR § 27.51).

- In addition, the Airborne Hunting Act (16 USC 742j1) provides regulatory authority to prohibit the use of aircraft to aid the hunting of wildlife and their pursuit and/or harassment.

- Aircraft operated without direct human intervention, such as unmanned aircraft systems, drones, model airplanes, etc. also fall under these regulations as they are considered aircraft regardless of size or weight. 50 CFR § 10.12 defines "aircraft" as "any contrivance used for flight in the air." In 14 CFR 1.1, aircraft means a device that is used or intended to be used for flight in the air. The U.S. Fish and Wildlife Service (Service) interprets the definition of "aircraft" in 50 C.F.R. § 10.12 to include any device that is used for flight in the air without the possibility of direct human intervention from within or on the device. All associated operational elements, including cameras, sensors, communication links, and all of the components that are required for the system operator to control the device are considered part of the device. The term "aircraft" includes all types of unmanned devices that meet this definition, including, but not limited to, model aircraft/airplanes, powered gliders, drones, motorized aerial vehicles, remotely piloted vehicle (RPV), multicopters (quad-, hexa- and octocopter), and other unmanned aircraft systems.

- The refuge goals, as defined in the Conte Refuge draft CCP, are focused on protecting the refuge's and Connecticut River's natural resources and offering priority, wildlife-dependent recreation. The refuge's purposes are:

  - To conserve, protect, and enhance the Connecticut River populations of Atlantic salmon, American shad, river herring, shortnose sturgeon, bald eagles, peregrine falcons, osprey, black ducks, and other native species of plants fish and wildlife.

  - To conserve, protect, and enhance the natural diversity and abundance of plant, fish and wildlife species, and the ecosystem upon which these species depend within the refuge.

  - To protect species, listed as endangered or threatened, or identified as candidates for listing, pursuant to the Endangered Species Act of 1973 as amended (16 U.S. 1531 et seq.).

  - To restore and maintain the chemical, physical, and biological integrity of wetland and other waters within the refuge.

  - To fulfill the international treaty obligations of the United States relating to fish and wildlife and wetlands.

  - To provide opportunities for scientific research, environmental education, and fish and wildlife oriented recreation and access to the extent compatible with the other purposes stated in this section.

- The use would conflict with Service policy 605 FW1 1.6 (C) and (D) and the Conte Refuge goals and purposes for the following reasons:

  - Aircraft have the potential to disturb migratory birds and other native wildlife (McEvoy et al. 2016; Lambertucci et al. 2015; Dolbeer 2006; Knight and Cole 1995; Belanger and Bedard 1995; Manci et al. 1988; Smith et al. 1988; and Owens 1977). This research shows that response to aircraft is influenced by many variables including aircraft size, proximity or visibility, altitude, flight profile, and aircraft noise. In particular, these activities could disturb birds and other species that rely on grasslands because these activities are most likely to occur in grassland habitats. Wildlife may be disturbed by noise from these aircraft, particularly from low-flying crafts and those that are landing or launching (Lambertucci et al. 2015; Owens 1977). This may cause birds and other wildlife to flush or disturb nesting birds and their nests. The launching and landing of these crafts can damage vegetation and directly impact wildlife by crushing nests or individuals. Additionally, aircraft users may need to leave roads and trails and/or enter fields to launch/retrieve their aircraft. This type of off-trail use may cause birds and other wildlife to flush, or may disturb nesting birds and their nest sites. While some wildlife can habituate to users on trails, wildlife may react most strongly to disturbance from users off trails (Taylor and Knight 2003).

  - The activities do not support and are not necessary to participate in any priority public uses. These activities do not contribute to visitors' appreciation or understanding of the refuge's resources.

  - The activities can conflict with existing wildlife-dependent recreational uses by disturbing other visitors engaged in priority public uses. Landing and launching aircraft for recreational or commercial purposes on refuge lands open to the public may degrade the experience of those participating in one or more priority public uses. Refuges are mandated to evaluate the quality of public uses permitted on refuge lands (605 FW1). For example, these aircraft may flush birds that photographers or hikers are observing, and loud noise from engines may detract from other visitors' enjoyment of the refuge. In this case, it would be in conflict of Service policy 605 FW1 1.6 (C) which directs the Service to minimize conflicts with fish and wildlife (which by extension affects the quality of a visitor's experience), and in part, (D) to minimize conflict with other users.

  - The activities may not be consistent with public safety because refuge visitors would not expect aircraft to attempt to land on the refuge and we can not guarantee pilots a safe place to land.

- Finally, given the potential volume of activities, expanse of lands over where the activities might occur, unpredictable location of activities, and current budget and staffing levels, managing the use with existing resources is not feasible. Refuge staff would be required to ensure that all aircraft are not launched or retrieved on refuge lands and that their use is not causing disturbance, harassing wildlife, or conflicting with other users. The difficulty in managing the activities to ensure that wildlife and compatible priority public uses are not negatively impacted would be significant. The activities are unpredictable in location across thousands of acres of the refuge, and are therefore difficult to evaluate the consequences of the activities or to utilize existing personnel to manage the use to ensure compatibility.

Two findings of appropriateness were distributed for public comment for 90 days from August 18, 2015 to November 16, 2015 as part of the review of the Silvio O. Conte Refuge's draft CCP/EIS: 1) landing and launching of ultralights and other aircraft; and 2) model airplane and kite flying. Comments we received on these uses were considered as we developed the final determination. A summary of comments received on the draft plan is included in appendix O of the final CCP/EIS. Based on similarities of the two uses, we combined the two findings of appropriateness into one, resulting in this final finding of appropriateness for manned and unmanned aircraft use for recreational or commercial purposes. Beyond model airplanes, we added several types of unmanned aircraft to the finding, such as drones, motorized aerial vehicles, remotely piloted vehicles, multicopters, etc. Kite flying was eliminated as a type of use from the final finding. This final finding will undergo another 30-day review with release of the final CCP/EIS.

REFERENCES:

Belanger L. and J. Bedard. 1990. Energetic Cost of Man-Induced Disturbance to Staging Snow Geese. Journal of Wildlife Management 54(1): 36-41.

Dolbeer, R.A. 2006. Height Distribution of Birds Recorded by Collisions with Civil Aircraft. The Journal of Wildlife Management, 70(5):1345-1350.

Knight, R.L., and D.N. Cole. 1995. Wildlife responses to recreation. Pages 51–69 In R. L. Knight and K. J. Gutzwiller, editors. Wildlife and recreationists: coexistence through management and research. Island Press, Washington, D.C., USA.

Lambertucci, S.A., E.C. Shepard, and R.P. Wilson. 2015. Human-wildlife Conflicts in a Crowded Airspace. Science, Vol. 348, Issue 6234 (01 May 2015), pp. 502-504.

Manci, K.M., D.N. Gladwin, R. Villella, and M.G. Cavendish. 1988. Effects of aircraft noise and sonic booms on domestic animals and wildlife: a literature synthesis. U.S. Fish and Wildlife Service, National Ecology Research Center, Ft. Collins, CO. NERC-88/29. 88

McEvoy, J.F., G.P. Hall, and P.G. McDonald. 2016. Evaluation of unmanned aerial vehicle shape, flight path and camera type for waterfowl surveys: disturbance effects and species recognition. PeerJ 4:e1831.

Owens, N.W. 1977. Responses of wintering brent geese to human disturbance. Wildfowl, 28:5-14.

Smith, D.G., D.H. Ellis, and T.H. Johnston. 1988. Raptors and Aircraft. In R.L Glinski, B. Gron-Pendelton, M.B. Moss, M.N. LeFranc, Jr., B.A. Millsap, and S.W. Hoffman, eds., Proceedings of the Southwest Raptor Management Symposium. National Wildlife Federation, Washington, D.C., pp. 360-367.

Taylor A.R. and R.L. Knight. 2003. Wildlife Responses to Recreation and Associated Visitor Perceptions. Ecological Applications, 13(4):951–963.

FWS Form 3-2319
02/06

FINDING OF APPROPRIATENESS OF A REFUGE USE

Refuge Name: Silvio O. Conte National Fish and Wildlife Refuge

Use: Target Shooting

This form is not required for wildlife-dependent recreational uses, take regulated by the State, or uses already described in a refuge CCP or step-down management plan approved after October 9, 1997.

Decision Criteria:	**YES**	**NO**
(a) Do we have jurisdiction over the use?	✔	
(b) Does the use comply with applicable laws and regulations (Federal, State, Tribal, and local)?		✔
(c) Is the use consistent with applicable Executive orders and Department and Service policies?		✔
(d) Is the use consistent with public safety?		✔
(e) Is the use consistent with goals and objectives in an approved management plan or other document?		✔
(f) Has an earlier documented analysis not denied the use or is this the first time the use has been proposed?	✔	
(g) Is the use manageable within available budget and staff?		✔
(h) Will this be manageable in the future within existing resources?		✔
(i) Does the use contribute to the public's understanding and appreciation of the refuge's natural or cultural resources, or is the use beneficial to the refuge's natural or cultural resources?		✔
(j) Can the use be accommodated without impairing existing wildlife-dependent recreational uses or reducing the potential to provide quality (see section 1.6D, 603 FW 1, for description), compatible, wildlife-dependent recreation into the future?		✔

Where we do not have jurisdiction over the use ["no" to (a)], there is no need to evaluate it further as we cannot control the use. Uses that are illegal, inconsistent with existing policy, or unsafe ["no" to (b), (c), or (d)] may not be found appropriate. If the answer is "no" to any of the other questions above, we will **generally** not allow the use.

If indicated, the refuge manager has consulted with State fish and wildlife agencies. Yes ___✔___ No ____.

When the refuge manager finds the use appropriate based on sound professional judgment, the refuge manager must justify the use in writing on an attached sheet and obtain the refuge supervisor's concurrence.

Based on an overall assessment of these factors, my summary conclusion is that the proposed use is:

Not Appropriate ___✔___ **Appropriate** _____

Refuge Manager: _____ Date: _____

If found to be **Not Appropriate**, the refuge supervisor does not need to sign concurrence if the use is a new use.

If an existing use is found **Not Appropriate** outside the CCP process, the refuge supervisor must sign concurrence.

If found to be **Appropriate**, the refuge supervisor must sign concurrence:

Refuge Supervisor: _____ Date: _____

A compatibility determination is required before the use may be allowed.

JUSTIFICATION FOR A FINDING OF APPROPRIATENESS OF A REFUGE USE

Refuge Name: Silvio O. Conte National Fish and Wildlife Refuge

Use: Target Shooting

NARRATIVE:

Prior to U.S. Fish and Wildlife Service acquisition of the Nulhegan Basin Division (division) in 1999, target shooting, involving multiple types of firearms (e.g., rifles, shotguns, pistols) occurred at the division's numerous borrow pits, as well as areas adjacent to recreational cabins, and occasionally at other locations across the ownership. Likewise, this use also occurred in a similar form on the surrounding industrial timber lands. While the use has been administratively prohibited on the division since at least 2006, the use, while not actively promoted by the landowner, continues at the neighboring West Mountain Wildlife Management Area (WMA) and Plum Creek timber lands. This use was practiced primarily by the area's cabin leaseholders, and an organization representing them–the Champion Lands Leaseholders and Traditional Interests Association-has requested a reinstatement of this use to include both formal (i.e., a developed shooting range) and informal (i.e., borrow pits, cabin sites, etc.) locations. In addition to constituting a recreational activity, this use is sometimes described as a way to improve an important hunting skill and sometimes to simply ensure that a rifle remains "well-sighted" after a jostling drive over miles of gravel roads.

Other options for target shooting exist in the vicinity of the division. Formal target shooting opportunities recently opened in 2016 at the State of Vermont's West Mountain Wildlife Management Area.

Target shooting poses numerous environmental, safety, and disturbance considerations–both to wildlife and refuge staff and visitors. Environmental issues relate primarily to the accumulation of lead, particularly in the backstop area (Cao et al. 2003). The myriad considerations necessary for range development is explained in National Shooting Sports Foundation (1997). In particular, they describe the two relevant Federal environmental statutes: Comprehensive Environmental Response, Compensation, and Liability Act and the Resource Conservation and Recovery Act. Both statutes place great responsibility on the site manager for addressing contaminant issues. Noise is also an issue, both to wildlife and people. Although many variables influence the distance that sound travels, it is likely that the sound emanating from a range will cause abandonment and disuse of an area by wildlife occurring within some radius of the activity. This can be especially damaging if shooting were to occur at several sites during the breeding season. Although the potential level of this use is unknown, it is expected to be highest on weekends, which are the highest public use period. Given that the sound of firearms can travel for miles, it is likely that the noise will constitute a nuisance to other refuge visitors. If shooting was to occur outside of designated hunting seasons, such sounds can also hinder our wildlife officer's ability to distinguish target shooting from the potential illegal use of firearms.

Hunting, fishing, wildlife observation and photography, and environmental education and interpretation are the six priority public uses of the National Wildlife Refuge System. The National Wildlife Refuge System Improvement Act of 1997 instructs refuge managers to seek ways to accommodate those six uses when found compatible. While allowing target shooting may in some circumstances contribute to a more humane kill in a hunting scenario, in its entirety, such an activity is not a wildlife-dependent priority public use nor does it further enhance the public's understanding and appreciation of the refuge's natural or cultural resources. In addition, this use would pose safety and environmental concerns beyond the refuge's capacity to administer. Furthermore, the exact opportunity desired by local users is already available within a few miles of the division on the neighboring WMA and private timber lands.

Target shooting on a national wildlife refuge is also not consistent with Federal regulations and policies. 50 CFR §27.41-27.42 states the following:

§ 27.41 General provisions. Carrying, possessing, or discharging firearms, fireworks, or explosives on national wildlife refuges is prohibited unless specifically authorized under the provisions of this subchapter C.

§ 27.42 Firearms. Only the following persons may possess, use, or transport firearms on national wildlife refuges in accordance with this section and applicable Federal and State law:

(a) Persons using firearms for public hunting under the provisions of 50 CFR part 32.

(b) Persons carrying unloaded firearms, that are dismantled or cased, in vehicles and boats over routes of travel designated under the provision of subchapter C.

(c) Persons authorized to use firearms for the taking of specimens of wildlife for scientific purposes.

(d) Persons authorized by special regulations or permits to possess or use firearms for the protection of property, for field trials, and other special purposes.

For these reasons, we have determined that allowing this use is not consistent with the Service policy on the appropriateness of refuge uses.

This finding of appropriateness was distributed for public comment for 90 days from August 18, 2015 to November 16, 2015 as part of the review of the Silvio O. Conte Refuge's draft CCP/EIS. Comments we received on this use were considered as we developed this final determination. A summary of comments received on the draft plan is included in appendix O of the final CCP/EIS. This finding will undergo another 30-day review with release of the final CCP/EIS.

REFERENCES:

Cao X, Ma LQ, M. Chen, D. W. Hardison, Jr., and W.G. Harris. 2003. Weathering of lead bullets and their environmental effects at outdoor shooting ranges. J. Environ. Qual. 2003 Mar-Apr; 32(2):526-34.

National Shooting Sports Foundation. 1997. Environmental Aspects of Construction and Management of Outdoor Shooting Ranges. 125 pp.

FWS Form 3-2319
02/06

FINDING OF APPROPRIATENESS OF A REFUGE USE

Refuge Name: Silvio O. Conte National Fish and Wildlife Refuge

Use: Camping Along the Nulhegan River in Support of the Northern Forest Canoe Trail

This form is not required for wildlife-dependent recreational uses, take regulated by the State, or uses already described in a refuge CCP or step-down management plan approved after October 9, 1997.

Decision Criteria:	**YES**	**NO**
(a) Do we have jurisdiction over the use?	✔	
(b) Does the use comply with applicable laws and regulations (Federal, State, Tribal, and local)?	✔	
(c) Is the use consistent with applicable Executive orders and Department and Service policies?	✔	
(d) Is the use consistent with public safety?	✔	
(e) Is the use consistent with goals and objectives in an approved management plan or other document?	✔	
(f) Has an earlier documented analysis not denied the use or is this the first time the use has been proposed?	✔	
(g) Is the use manageable within available budget and staff?	✔	
(h) Will this be manageable in the future within existing resources?	✔	
(i) Does the use contribute to the public's understanding and appreciation of the refuge's natural or cultural resources, or is the use beneficial to the refuge's natural or cultural resources?	✔	
(j) Can the use be accommodated without impairing existing wildlife-dependent recreational uses or reducing the potential to provide quality (see section 1.6D, 603 FW 1, for description), compatible, wildlife-dependent recreation into the future?	✔	

Where we do not have jurisdiction over the use ["no" to (a)], there is no need to evaluate it further as we cannot control the use. Uses that are illegal, inconsistent with existing policy, or unsafe ["no" to (b), (c), or (d)] may not be found appropriate. If the answer is "no" to any of the other questions above, we will **generally** not allow the use.

If indicated, the refuge manager has consulted with State fish and wildlife agencies. Yes ___✔___ No ___.

When the refuge manager finds the use appropriate based on sound professional judgment, the refuge manager must justify the use in writing on an attached sheet and obtain the refuge supervisor's concurrence.

Based on an overall assessment of these factors, my summary conclusion is that the proposed use is:

Not Appropriate _____ **Appropriate** ___✔___

Refuge Manager: _____ Date: _____

If found to be **Not Appropriate**, the refuge supervisor does not need to sign concurrence if the use is a new use.

If an existing use is found **Not Appropriate** outside the CCP process, the refuge supervisor must sign concurrence.

If found to be **Appropriate**, the refuge supervisor must sign concurrence:

Refuge Supervisor: _____ Date: _____

A compatibility determination is required before the use may be allowed.

603 FW 1
Exhibit 1
Page 2

JUSTIFICATION FOR A FINDING OF APPROPRIATENESS OF A REFUGE USE

Refuge Name: Silvio O. Conte National Fish and Wildlife Refuge

Use: Camping Along the Nulhegan River in Support of the Northern Forest Canoe Trail

NARRATIVE:

Throughout its 740-mile length, the Northern Forest Canoe Trail (NFCT) maintains many low-intensity infrastructure needs (e.g., launches, portage trails, campsites) for paddlers. This proposal is to build a tent site along the Nulhegan River to serve both through paddlers (i.e., those completing the full 740-mile length), as well as those who choose to paddle shorter segments. The site will consist of a 20-by-20-foot cleared area, with a seasonal log ladder to allow access from the river, picnic table, privy, and space for two tents. The use will be administered with a special use permit (SUP) granted to the NFCT. The SUP will contain requirements governing the use of the site, as well as those necessary to ensure compatibility.

Across the trail network, NFCT has projected a 5-mile spacing of campsites to accommodate projected use levels. This proposed campsite would fill a 15-mile gap between Brighton State Park (10 miles upstream and the Bloomfield campsite 5 miles downstream). In addition to being somewhat centrally located within this reach, the proposed site is the only location with relatively easy access for a land-based trail maintainer, yet far enough from a roadway to discourage misuse of the site.

Establishment of this campsite will provide a means to reach a user group who may otherwise be only peripherally aware of the refuge and National Wildlife Refuge System (Refuge System). More specifically, with the creation of a short spur trail, the campsite can link to the Nulhegan River Trail, which accesses the division's visitor contact station. Paddlers can therefore have an opportunity to view the exhibits and talk with staff, thereby becoming better informed about the refuge, the Refuge System, and the collective conservation mission. Finally, establishment of the campsite can enhance the already strong partnership with NFCT and be of mutual benefit to both entities. For these reasons, we have found that creating a campsite along the Nulhegan River contributes to the purposes for which the refuge was established and the mission of the Refuge System and, therefore, is an appropriate refuge use under the U.S. Fish and Wildlife Service's policy on the appropriateness of refuge uses (603 FW 1).

This finding of appropriateness and the compatibility determination for this use was distributed for public comment for 90 days from August 18, 2015 to November 16, 2015 as part of the review of the Silvio O. Conte Refuge's draft CCP/EIS. Comments we received on this use were considered as we developed this final determination. A summary of comments received on the draft plan is included in appendix O of the final CCP/EIS. This finding will undergo another 30-day review with release of the final CCP/EIS.

COMPATIBILITY DETERMINATION

USE:

Camping Along the Nulhegan River in Support of Northern Forest Canoe Trail

REFUGE NAME:

Silvio O. Conte National Fish and Wildlife Refuge (Conte Refuge)

DATE ESTABLISHED:

October 3, 1997

ESTABLISHING AND ACQUISITION AUTHORITY(IES)

- Silvio O. Conte National Fish and Wildlife Refuge Act (Public Law 102-212).
- Migratory Bird Conservation Act of 1929.
- Land and Water Conservation Fund Act of 1965.

REFUGE PURPOSE(S):

- To conserve, protect, and enhance the Connecticut River populations of Atlantic salmon, American shad, river herring, shortnose sturgeon, bald eagles, peregrine falcons, osprey, black ducks, and other native species of plants, fish, and wildlife.
- To conserve, protect, and enhance the natural diversity and abundance of plant, fish and wildlife species and the ecosystem upon which these species depend within the refuge.
- To protect species, listed as endangered or threatened, or identified as candidates for listing, pursuant to the Endangered Species Act of 1973 (ESA) as amended (16 U.S. 1531 et seq.).
- To restore and maintain the chemical, physical, and biological integrity of wetland and other waters within the refuge.
- To fulfill the international treaty obligations of the United States relating to fish and wildlife and wetlands.
- To provide opportunities for scientific research, environmental education, and fish and wildlife oriented recreation and access to the extent compatible with the other purposes stated in this section.

NATIONAL WILDLIFE REFUGE SYSTEM MISSION:

To administer a national network of lands and waters for the conservation, management, and where appropriate, restoration of the fish, wildlife, and plant resources and their habitats within the United States for the benefit of present and future generations of Americans.

DESCRIPTION OF USE:

(a) What is the use? Is it a priority public use?
The use is overnight camping at a designated site along the Nulhegan River. Camping is not a priority public use of the National Wildlife Refuge System (Refuge System) under the National Wildlife Refuge System Administration Act of 1966 (16 U.S.C. 668dd-668ee), and the National Wildlife Refuge System Improvement Act of 1997 (Public Law 105-57). Camping is a secondary use that facilitates and supports wildlife-dependent priority public uses including fishing, hunting, wildlife observation, and photography.

(b) Where would the use be conducted?
A campsite will be developed on a flat river terrace on the south shore of the Nulhegan River. The site will be approximately 100 feet from the shore of Nulhegan River and 650 feet from the Nulhegan River Trail and provide visitor access to the division's visitor contact station (map D.1).

(c) When would the use be conducted?
The campsite will be available for use during the typical paddling season: May 1 through October 31. The site will be closed to camping outside of these dates.

(d) How would the use be conducted?
The campsite will contain similar amenities and resemble similar Northern Forest Canoe Trail (NFCT) campsites along the 740-mile trail network. The campsite will be established in a flat area along the river shoreline. Woody vegetation will be cut at ground level within an approximately 20-by-20-foot area. Grasses and forbs will remain and their continued growth will be encouraged to maintain soil stability. The site will contain a seasonal floating log ladder placed along the river's edge to allow safe access to the site, privy, picnic table, and informational/directional signage. The site will be administered and maintained by the NFCT pursuant to a special use permit (SUP). The permit will specify maintenance and hygiene standards. Drinking water is not provided. No trash pick-up is provided and campers must carry out all trash.

Campsite regulations consist of the following:

- The site is available on a first-come basis.
- The maximum number of tents allowed is two.
- The maximum length of stay is 2 nights.
- The maximum number of people occupying the campsite is 6.
- Quiet hours are from 10 p.m. to 7 a.m.
- Pets are permitted, but must be leashed.
- No fires are allowed.

We list additional refuge-specific regulations below under the section "Stipulations Necessary to Ensure Compatibility."

The NFCT has developed a tiered system for maintaining the trail and building needed infrastructure. Each year they rely on the following sources to accomplish work across the NFCT:

- **Trail Maintainer Program:** The NFCT has been divided into 10- to 15-mile adoptable segments. Trail Maintainers visit their trail segments a minimum of twice a year to perform general maintenance and observe and report trail conditions to the NFCT Trail Director.
- **Stewardship Intern Program:** A crew of four interns and one field coordinator perform trail infrastructure work across the NFCT. A minimum of one project is performed in each state. The Stewardship Intern Crew also supports all Waterway Work Trips (weekend projects with up to six additional volunteers).
- **Contracted Projects:** For larger projects involving heavy equipment or over 4 weeks of crew time the NFCT will contract with professional trail builders or construction workers as needed.

The NFCT relies on Landowner Agreement Forms to describe the stewardship plan for the parcel and outline the responsibilities of the NFCT.

(e) Why is this use being proposed?
The NFCT is a 740-mile water trail, linking Old Forge, New York, to Fort Kent, Maine. Trail use occurs under two categories; through paddlers (traveling the entire length of the NFCT in one expedition) and section paddlers (paddlers performing day or overnight trips on sections of the NFCT). Through Paddler numbers

average around 20 a year, with slight increases most years since the NFCT was established in 2006. With the installation of sign-in boxes in 2012, they will be able to obtain more accurate data for section paddlers. The Nulhegan River has not in recent times been a very active paddling corridor. The NFCT has brought increased activity to this corridor and current use is estimated at 50 to 60 paddlers per season. A majority of paddlers will extend their outing to several days, necessitating overnight accommodations. Throughout its length, the NFCT contains 456 campsites, most along the shores of lake and rivers. Providing such rustic amenities on the refuge will support this growing recreational use. Further, it will provide the U.S. Fish and Wildlife Service (Service) with an opportunity to engage with an additional outdoor recreation-based user group. Paddlers will have access to the division's visitor contact station, including its staff and exhibits. Providing this use will also support priority wildlife-dependent activities given that users often also participate in fishing and wildlife observation.

AVAILABILITY OF RESOURCES:

The resources necessary to provide and administer this use are available within current and anticipated refuge budgets. The bulk of the cost will involve staff time to prepare and administer the SUP, and to maintain the spur trail. NFCT will maintain the integrity of the camp site amenties and keep the site clean.

We estimate below the annual costs associated with the administration of this use.

Spur trail maintenance:	$800
Prepare and administer special use permit, general coordination with NFCT:	$900
Camp site inspection/monitoring:	$700
Total Annual Cost of Program:	**$2,400**

ANTICIPATED IMPACTS OF THE USE:

We describe below the potential impacts of camping, as reported in the literature. Impacts may be locally quite severe, but are usually restricted to a relatively small area (i.e., the campsite itself) (Marion and Cole 1996). Significant impacts on vegetation and soil generally occur quickly, even with light use (Cole 1981). Much of the impact occurs when the campsite is first opened and during the first year of use.

Soil: Camping results in soil compaction and reduction in soil moisture content. It may reduce or remove the organic litter and soil layer, and run-off and soil erosion may increase. Those changes affect soil invertebrates and microbial processes, as well as inhibit plant growth. Fine-textured soils are particularly susceptible to compaction. Campsites with vegetated shorelines that are accessed by boat may also undergo shoreline erosion from the effects of repeated boat landings compacting soil and removing vegetation. Visitor use of the shoreline for fishing, swimming, dish washing, and collecting water may also trample vegetation, compact soil, and accelerate erosion. That erosion may expose tree roots, resulting in increased tree mortality due to wind throw. The presence of a 20-by-20-foot cleared area with a picnic table and privy will tend to concentrate the use of the campsite and limit campsite "creep." The refuge will work with NFCT to evaluate the condition of the campsite and to ensure the availability of signage to educate visitors about low-impact camping techniques.

Vegetation: The impacts of camping on vegetation are usually locally severe, even with low to moderate use. They include loss of ground vegetation cover, reduced vegetation height and vigor, loss of rare or fragile species, and changes in plant community composition (Leung and Marion 2000). Vegetation may be removed or trampled. Shrubs and trees are commonly lost from the site or damaged. Axes or fire may scar tree trunk, branches may be broken, bark removed or damaged, or nails placed in trees. Tree regeneration (seedlings and saplings) is generally lost, thus facilitating conversion to a non-forested site. Marion and Cole (1996) found on campsites they studied in Delaware that an average of 19 percent of trees had been felled and 77 percent of the standing trees had been damaged (primarily branches cut for firewood or trunks scarred by axes and nails). Such impacts should be reduced given the prohibition on campfires. Trampling resistant vegetation (often grasses or exotics) tend to replace existing understory vegetation (forbs) (Marion and Cole 1996).

The indirect effects of vegetation disturbance include microclimate changes and increased erosion. The extent of camping impacts on vegetation is generally related to the frequency sites are used, their durability, and group size (Cole 1995). Larger groups are usually responsible for enlarging campsites more than small groups (Cole 1992, Marion 2003). Campsite enlargement is particularly a problem when campsites are located on flat, open sites. Campers may also enlarge the affected area by developing multiple, uncontrolled "social trails" between tents, to water sources, to viewing points or favored fishing locations. Some visitors have a much greater impact on vegetation than others, because they are more likely to cut down vegetation, dig trenches around tents, and otherwise modify the sites. Many of these potential impacts will be mitigated with this proposal given that only a single site will be developed and it will be limited to two tents, hence a small group size. Riverside camping will be permitted only at a single designated campsite, so any disturbance to vegetation will be limited to a small area of the refuge.

Water Quality: Improperly disposed human and pet wastes at campsites may compromise water quality by introducing pathogens, and affect campsite aesthetics. Human waste, food disposal, and dishwashing may increase aquatic nutrient loads. That may result in limited, localized increases in algal growth, facilitating oxygen depletion and altering the composition of aquatic vegetation and invertebrate communities. Run-off from eroded campsites can increase turbidity and sedimentation, which may affect fish and invertebrates (Marion 2003, Leung and Marion 2000). Soap from improper dishwashing, trash, and fish-cleaning waste, may all pollute water and have an aesthetic impact. Pit toilets located near water on shallow, permeable soils can sometimes introduce coliform bacteria into the water (Hammitt and Cole 1998). However, camping generally does not affect water quality to the extent of creating a public health concern, even in areas that receive heavy use (Cole, 1981).

The NFCT will be responsible for maintaining the campsite and privy. The refuge will cooperate with the NFCT in providing educational outreach on low-impact washing methods and proper waste disposal.

Wildlife: Camping can alter or destroy wildlife habitat, or displace wildlife from preferred habitat or resources (food, water, nest sites). Camping may also modify or disrupt wildlife behavior. Larger groups are generally more likely to disturb wildlife (Marion 2003). The restrictions on the number of tents and occupants should assist with limiting the level of impacts.

Human visitors or their pets may "harass" wildlife. Even leashed pets may disturb wildlife. Pets may also transmit diseases to wildlife (Hammitt and Cole 1998). Disturbance related to camping may also affect wildlife health, fitness, reproduction, and mortality rates (Leung and Marion 2000).

Indirect effects may include a change in vertebrate species composition near the campsite. Changes in vertebrate communities at campgrounds (as compared to control sites) have been reported for birds (Blakesley and Reese 1988, Garton et al. 1977, Foin et al. 1977, Knight and Gutzwiller 1995) and small mammals (Clevenger and Workman 1977). In the case of songbirds, changes in species composition were due primarily to a reduction in ground cover vegetation (for nesting, feeding) at campsites and different levels of sensitivity to human disturbance. Rarer species are generally absent from campgrounds.

The presence of humans attracts some species, while others avoid it. The availability of food generally differs between campgrounds and undisturbed areas. Natural foods may decrease in availability while foods supplied by humans may increase. Humans may intentionally supply foods to wildlife, or unintentionally, because of littering, accidental spillage, or improper food storage (Garton et al. 1977). Human foods may be unhealthy for wildlife or promote scavenging behavior, which may increase vulnerability of animals to predation. Rodent populations often increase at campsites, in response to increased availability of human food, and may negatively affect nesting songbirds. Bears and other scavengers may be attracted to improperly stored food and may damage property or threaten visitor safety.

Only leashed pets will be permitted at the campsite. The refuge will work with the NFCT on managing the campsite and providing outreach to the public on how to avoid disturbing wildlife and the importance of not feeding wildlife and storing food properly.

Visitor Conflicts: Conflicts may arise between visitors as a result of noise and over-crowding. Conflicts may also develop between small and large groups and different user groups (fishermen, hunters, wildlife photographers, etc.). Litter, noise, large group sizes, and crowding may impair the refuge experience for some visitors. The campsite will be located at the end of a proposed spur trail and occupancy will be limited to two tents. Therefore, conflicts with other users are not anticipated to be significant. Public outreach may help reduce potential conflicts by reducing littering and promoting considerate camping. The refuge will work with the NFCT to adjust camping policies, should this issue become significant.

Overall, the impacts associated with this use would be confined to a minute portion of the refuge, in the immediate vicinity the campsite. Seasonal closures, when warranted, and the stipulations listed below, should ensure that disturbance of wildlife and impacts on refuge resources are minimal.

PUBLIC REVIEW AND COMMENT:

A finding of appropriateness and this compatibility determination were distributed for public comment for 90 days from August 18, 2015 to November 16, 2015 as part of the review of the Silvio O. Conte Refuge's draft CCP/EIS. Comments we received on this use were considered as we developed this final determination. This determination will undergo another 30-day review with release of the final CCP/EIS. A summary of comments received on the draft plan is included in appendix O of the final CCP/EIS.

DETERMINATION (CHECK ONE BELOW):

____ Use is not compatible

__X__ Use is compatible, with the following stipulations

STIPULATIONS NECESSARY TO ENSURE COMPATIBILITY:

- Camping is only allowed at the designated campsite only.
- The campsite will be open to use only between May 1 and October 31.
- Only leashed pets will be permitted at the campsite.
- No fires will be allowed.
- No wood gathering or vegetation removal is permitted.
- No digging or trenching will be permitted.
- Feeding of wildlife is not permitted.
- All trash must be carried out.
- NFCT will help manage the campsite under a SUP.
- In cooperation with the NFCT, we will implement best management practices for preventing campsite expansion and managing waste.
- We will place a sign at the campsite explaining refuge regulations and minimal impact camping techniques. The refuge will work with the NFCT to provide additional outreach on "leave no trace" camping.
- Per the description in figure D.1, we will monitor the impacts of camping, the condition of the shoreline and campsite, and the potential for wildlife disturbance yearly, and work with the NFCT to minimize impacts or restore sites. Based on the outcome of those surveys, we may adjust our management of the site.

JUSTIFICATION:

Camping provides an increased opportunity for the public to participate in priority public uses in a remote setting. Providing the public with an opportunity to experience the refuge wildlife and natural resources through camping, along with a public educational outreach program, will help motivate visitors to understand and develop a commitment to protecting healthy ecosystems. Experiencing the refuge through camping and education are tools that can help build a land ethic, develop political support, and lessen vandalism, littering and poaching. We expect the impacts of camping on vegetation and wildlife to be minor and localized. With the stipulations noted above, camping will be compatible with refuge purposes.

Based on the limited detrimental impacts of this use, the stipulations above, and a long history of use, overnight camping at current levels will not materially interfere with or distract from the mission of the Refuge System or the purposes for which the refuge was established.

SIGNATURE:

Refuge Manager: _____ _____
(Signature) (Date)

CONCURRENCE:

Regional Chief: _____ _____
(Signature) (Date)

MANDATORY 10-YEAR RE-EVALUATION DATE:

_____

LITERATURE CITED:

Blakesley, J.A. and K.P. Reese. 1988. Avian use of campground and noncampground sites in riparian zones. J. Wildl. Manage. 52(3):399-402

Clevenger, G.A. and G.W. Workman. 1977. The effects of campgrounds on small mammals in Canyonlands and Arches National Parks, Utah. Trans. 42nd North Amer. Wildl. Conf.: 473-484.

Cole, D.N. 1981. Managing ecological impacts at wilderness campsites: an evaluation of techniques. J. of Forestry. 79(2):86-89.

Cole, D.N. 1992. Modeling wilderness campsites: factors that influence amount of impact. Environ. Manag. 16(2):255-264.

Cole, D.N. 1995. Disturbance of natural vegetation by camping: experimental applications of low-level stress. Environ. Manag. 19(3):405-416.

Cole, D.N. and J.L. Marion. 1988. Recreation impacts in some riparian forests of the eastern United States. Environ. Manag. 12(1): 99-107.

Foin, T.C., E. O. Garton, C.W. Bowen, J.M. Everingham, R.O. Schultz and B. Holton. 1977. Quantitative studies of visitor impacts on environments of Yosemite National park, California, and their implications for park management policy. J. Environ. Manage. 5:1-22.

Garton, E.O., B. Hall and T.C. Foin. 1977. The impact of a campground on the bird community of a lodgepole pine forest *In*: T.C. Foin, Ed. Visitor impacts on national parks: the Yosemite ecological impact study. Inst. Ecol. Publ. 10. Univ. of Calif., Davis

Hammitt, W.E. and D.N. Cole. 1998. Wildland recreation: ecology and management. 2nd Ed. John Wiley & Sons, NY.

Knight, R.L. and K.J. Gutzwiller, Eds. 1995. Wildlife and recreationists: coexistence through management and research. Island Press, Wash., D.C.

Leung, Y. and J.L. Marion. 2000. Recreation impacts and management in wilderness: a state-of-knowledge review *In*: Cole, D., McCool, S.F., Borrie, W.T., O'Loughlin, J. Comps. Wilderness science in a time of change conference. Vol. 5: Wilderness ecosystems, threats, and management: 1999 May 23-27, Missoula, MT. Proc. RMRS-P-15-Vol. 5: 23-48

Marion, J.L. 2003. Camping impact management on the Appalachian National Scenic Trail. Appalachian Trail Conference, Harpers Ferry, WV.

Marion, J.L. and D.N. Cole. 1996. Spatial and temporal variation in soil and vegetation impacts on campsites. Ecol. Applic. 6(2): 520-530.

Map D.1. Proposed Northern Forest Canoe Trail Campsite at Nulhegan Basin Division.

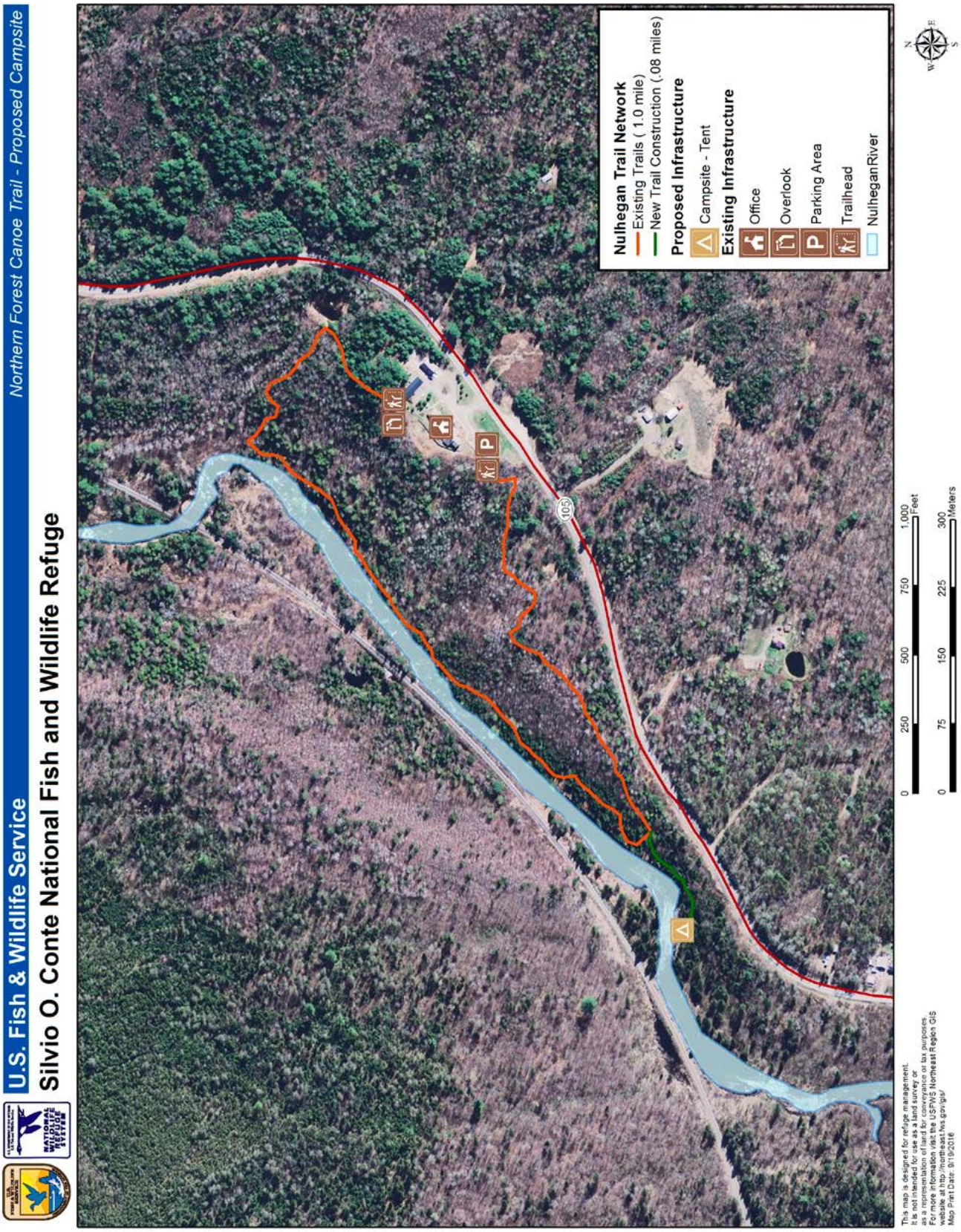

Figure D.1. Acceptable Impact Thresholds for Camping.

Acceptable Impact Thresholds

Distance	Loss of herbaceous	Increase bare soil	Loss of leaf litter	Seedlings and saplings
0-20	75%	75%	75%	75%
20-40	25%	25%	25%	25%
50	10%	10%	10%	10%

Acceptable limits defined as the % cover increase in bare soil or % cover decrease in herbaceous veg. seedlings, saplings, and leaf litter beyond which the use remains compatible.

Ex. We will accept up to a 75% loss of herbaceous vegetation within the 0-20 meter radius of tenting activity. We will not accept 30% increase in bare soil between 20–40 meters from tenting activity.

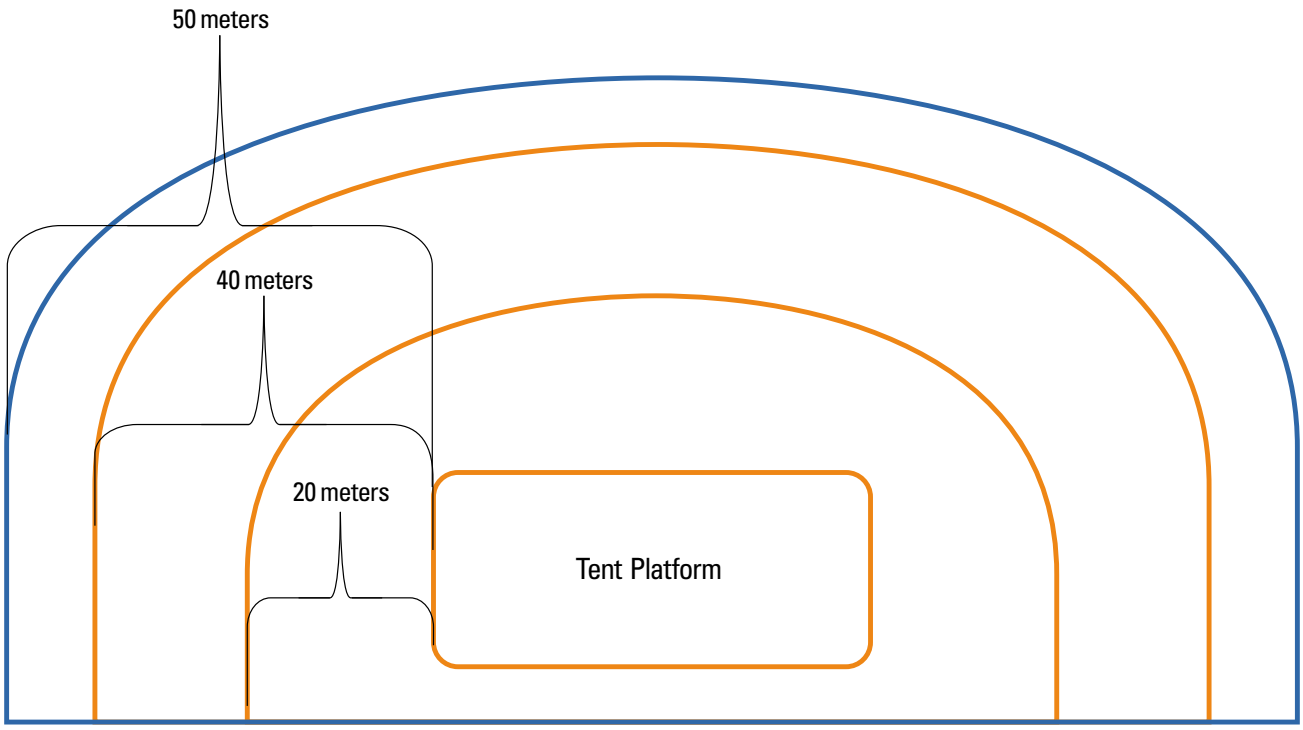

FINDING OF APPROPRIATENESS OF A REFUGE USE

FWS Form 3-2319
02/06

Refuge Name: Silvio O. Conte National Fish and Wildlife Refuge

Use: Commercial Forestry for Habitat Management

This form is not required for wildlife-dependent recreational uses, take regulated by the State, or uses already described in a refuge CCP or step-down management plan approved after October 9, 1997.

Decision Criteria:	**YES**	**NO**
(a) Do we have jurisdiction over the use?	✔	
(b) Does the use comply with applicable laws and regulations (Federal, State, Tribal, and local)?	✔	
(c) Is the use consistent with applicable Executive orders and Department and Service policies?	✔	
(d) Is the use consistent with public safety?	✔	
(e) Is the use consistent with goals and objectives in an approved management plan or other document?	✔	
(f) Has an earlier documented analysis not denied the use or is this the first time the use has been proposed?	✔	
(g) Is the use manageable within available budget and staff?	✔	
(h) Will this be manageable in the future within existing resources?	✔	
(i) Does the use contribute to the public's understanding and appreciation of the refuge's natural or cultural resources, or is the use beneficial to the refuge's natural or cultural resources?	✔	
(j) Can the use be accommodated without impairing existing wildlife-dependent recreational uses or reducing the potential to provide quality (see section 1.6D, 603 FW 1, for description), compatible, wildlife-dependent recreation into the future?	✔	

Where we do not have jurisdiction over the use ["no" to (a)], there is no need to evaluate it further as we cannot control the use. Uses that are illegal, inconsistent with existing policy, or unsafe ["no" to (b), (c), or (d)] may not be found appropriate. If the answer is "no" to any of the other questions above, we will **generally** not allow the use.

If indicated, the refuge manager has consulted with State fish and wildlife agencies. Yes ✔ No ____.

When the refuge manager finds the use appropriate based on sound professional judgment, the refuge manager must justify the use in writing on an attached sheet and obtain the refuge supervisor's concurrence.

Based on an overall assessment of these factors, my summary conclusion is that the proposed use is:

Not Appropriate _____ **Appropriate** ✔

Refuge Manager: _____ Date: _____

If found to be **Not Appropriate**, the refuge supervisor does not need to sign concurrence if the use is a new use.

If an existing use is found **Not Appropriate** outside the CCP process, the refuge supervisor must sign concurrence.

If found to be **Appropriate**, the refuge supervisor must sign concurrence:

Refuge Supervisor: _____ Date: _____

A compatibility determination is required before the use may be allowed.

603 FW 1
Exhibit 1
Page 2

JUSTIFICATION FOR A FINDING OF APPROPRIATENESS OF A REFUGE USE

Refuge Name: Silvio O. Conte National Fish and Wildlife Refuge

Use: Commercial Forestry for Habitat Management

NARRATIVE:

Forest management at Silvio O. Conte National Fish and Wildlife Refuge (refuge) is integral to meeting the refuge's wildlife habitat objectives. From a practical standpoint, the optimum means to achieve this goal is with commercial forest management, subject to management prescriptions prepared and overseen by the refuge forester. Commercial loggers have the capability to treat the acreages desired–and can do so most efficiently and economically. In many cases, commercial logging will attain our desired outcome at no cost to the refuge and a slight financial gain for the American public.

Initial efforts will focus on larger areas, such as the Nulhegan Basin Division, where management will offer the greatest benefit to forest-dependent migratory birds. However, additional refuge lands are being considered for forest management: in Vermont–Putney Mountain Unit; in New Hampshire–Pondicherry and Blueberry Swamp Divisions; in Massachusetts–Dead Branch Division; and in Connecticut–Salmon River Division.

Commercial forest management is considered to be an economic use under 50 CFR. 29.1. Therefore, this use must contribute to the purposes for which the refuge was established or the mission of the National Wildlife Refuge System (Refuge System). Forest management provides the array of vegetation types, successional stages, and structural attributes desired for our forest-dependent trust species. In this way, commercial forest management contributes to goal 1 of the refuge's draft Comprehensive Conservation Plan (CCP) and Environmental Impact Statement (EIS), which states that the refuge will provide and promote through active management a diversity of successional forested habitats for the benefit of our focal wildlife species.

Commercial forest management facilitates the management of the refuge's forests and is not only a reasonable method, but the preferred method of meeting the habitat needs of forest-dependent birds. For these reasons, we have found commercial forest management contributes to the purposes for which the refuge was established and the mission of the Refuge System and, therefore, is an appropriate refuge use under the U.S. Fish and Wildlife Service's policy on the appropriateness of refuge uses (603 FW 1).

This finding of appropriateness and the compatibility determination for this use was distributed for public comment for 90 days from August 18, 2015 to November 16, 2015 as part of the review of the Silvio O. Conte Refuge's draft CCP/EIS. Comments we received on this use were considered as we developed this final determination. A summary of comments received on the draft plan is included in appendix O of the final CCP/EIS. This finding will undergo another 30-day review with release of the final CCP/EIS.

COMPATIBILITY DETERMINATION

USE:

Commercial Forestry for Habitat Management

REFUGE NAME:

Silvio O. Conte National Fish and Wildlife Refuge (Conte Refuge)

DATE ESTABLISHED:

October 3, 1997

ESTABLISHING AND ACQUISITION AUTHORITY(IES):

- Silvio O. Conte National Fish and Wildlife Refuge Act (Public Law 102-212).
- Migratory Bird Conservation Act of 1929.
- Land and Water Conservation Fund Act of 1965.

REFUGE PURPOSE(S):

- To conserve, protect, and enhance the Connecticut River populations of Atlantic salmon, American shad, river herring, shortnose sturgeon, bald eagles, peregrine falcons, osprey, black ducks, and other native species of plants, fish, and wildlife.
- To conserve, protect, and enhance the natural diversity and abundance of plant, fish and wildlife species, and the ecosystem upon which these species depend within the refuge.
- To protect species listed as endangered or threatened, or identified as candidates for listing, pursuant to the Endangered Species Act of 1973 as amended (16 U.S. 1531 et seq.).
- To restore and maintain the chemical, physical, and biological integrity of wetland and other waters within the refuge.
- To fulfill the international treaty obligations of the United States relating to fish and wildlife and wetlands.
- To provide opportunities for scientific research, environmental education, and fish and wildlife oriented recreation and access to the extent compatible with the other purposes stated in this section.

NATIONAL WILDLIFE REFUGE SYSTEM MISSION:

To administer a national network of lands and waters for the conservation, management, and where appropriate, restoration of the fish, wildlife, and plant resources and their habitats within the United States for the benefit of present and future generations of Americans.

DESCRIPTION OF USE:

(a) What is the use? Is it a priority public use?
Commerical forest management will be performed for the primary purpose of creating and/or improving wildlife habitat to ensure a diversity of forest structure and composition. Commercial forest management is not a priority public use. Commercial forest management is considered to be an economic use under 50 CFR. 29.1. Commercial forest management can contribute to the refuge's purposes, and habitat and species goals when conducted to manage and improve habitat for wildlife. Commercial forest management may include a variety of

accepted silvicultural practices, such as thinnings and release cuttings to remove pole, pulpwood or firewood; regeneration cuts such as seed tree, selection, or shelterwood cuts, which would yield products ranging from pulpwood to saw timber; and salvage cuts performed as a result of storm, insect or disease damage which could result in the sale of any or all of the above mentioned forest products. Commercial management practices are the preferred method to safely and efficiently manage refuge forests in a cost-effective manner. It is impractical for the refuge to acquire the necessary equipment and staff to efficiently conduct these management actions.

(b) Where would the use be conducted?
The refuge contains forested tracts on most of its existing 16 divisions and units, making forest management possible throughout the refuge. Initial efforts will focus on larger tracts that were harvested most recently from previous owners, and whose management will offer the greatest benefit to forest-dependent migratory birds. The Nulhegan Basin Division (greater than 26,000 acres) makes up the majority of the refuge's forested land base, and most forest management will occur on that division. The following additional refuge lands are being considered for forest management to improve wildlife habitat: in Vermont–Putney Mountain Unit; in New Hampshire–Pondicherry and Blueberry Swamp Divisions; in Massachusetts–Dead Branch Division; and in Connecticut–Salmon River Division.

(c) When would the use be conducted?
Forest management may occur at different times and at different locations, depending on individual site characteristics, stand conditions, and other resource concerns. All forest management will occur at times designed to minimize unwanted impacts on resources (e.g., erosion, soil compaction, or the disturbance of wildlife), while maximizing the desired silvicultural results, such as seed germination and natural tree regeneration. A comprehensive forest inventory–evaluating forest habitat and wildlife species of concern–will aid in determining the appropriate timing for forest management.

(d) How would the use be conducted?
A comprehensive forest inventory–evaluating forest habitat and wildlife species of concern–will aid in determining which stands on the refuge will benefit from active forest management. Stands will be managed to diversify forest age class and structure to benefit focal wildlife species (Seymour & Hunter Jr. 1992, 2000; Kenefic & Nyland 2000; Keeton 2006; Foster et al. 2010). A variety of commercial and non-commercial timber harvesting may occur as described below. All harvesting will follow best forestry and wildlife management practices (BMPs) recommended by the respective state forestry agency (Bennett 2010). This includes protections for wetlands, hydric soils, and streams. More detailed silvicultural treatments are outlined in the Conte Refuge CCP; stands identified for active forest management within each ownership will be detailed in each division's Habitat Management Plan (HMP).

Forest management activities will be directed by each refuge division's HMP. The specific treatment prescriptions are "stepped down" from the HMP. Where commercial forest management is warranted, those activities are performed by a logger operating under a special use permit (SUP). Project prospectus and specifications are forwarded to local and regional logging companies for competitive bidding. The refuge manager will select a logger based on meeting qualifications and requirements in the project prospectus. The refuge manager will issue the selected operator a SUP and the refuge forester will supervise the forest management operation. Active harvest operations may include felling trees, skidding them to a landing, processing the trees, loading logs or wood chips on trucks, and hauling the wood products offsite. Forest management treatments (e.g., trees targeted, spacing, residual tree density, harvest method, etc.) are dictated by a silvicultural prescription developed by the refuge forester with input from the refuge biologist, and approved by the refuge manager.

All activities under this special use permit process are regulated by provisions listed in 50 CFR (subpart D-Permits, 25.41–45). The permittee would be required to comply with all Department of the Interior, U.S. Fish and Wildlife Service, and Federal, State, and local laws in the conduct of their business. Because this is an economic use of the refuge, it is also subject to other applicable laws and regulations (see 50 CFR 29.1). We would continue to follow the procedures for SUPs outlined in the Service's Refuge Manual (5 RM 17.11) and other applicable laws and regulations (see also 50 CFR 29.1) when selecting permittees and administering this use.

Within a specific division or unit, focal species have been identified and will act as drivers for active forest management. Where focal species-specific habitat conditions are missing, and may be created through active forest management, those areas will be prioritized for treatment. Division-specific focal species are discussed in great detail in appendix A of the Conte Refuge draft CCP/EIS. As a hypothetical example, forest

management within a red spruce-northern hardwood (or mixed-wood) stand, using crop tree release and canopy gap formation, will increase understory density and enhance the component of softwood species, benefiting focal species Canada warbler and blackburnian warblers respectively.

Silvicultural treatments will be designed to meet habitat objectives within particular forest types (spruce-fir, northern hardwood, oak-pine, etc.), while addressing site-specific operational constraints. Active management will help restore forest structure (Kenefic & Nyland 2000; Crow et al. 2002; Bryan 2003; Keeton 2006; Raymond et al. 2009; Arseneault et al. 2011) and species composition (Leak 1975, 2003, 2005; Arseneault et al. 2011), and improve a forests resiliency to environmental stressors like climate change (Hines, Heath & Birdsey 2010). Monitoring of forest systems and the impacts of forest management strategies will allow modification of management practices as necessary. Climate change may influence the trajectory of our forest systems in unpredictable ways, and adjustments to objectives and management strategies may occur. When feasible, management strategies will favor or increase the conifer component of stands on appropriate sites. Strategies are described below:

Strategies for conifer-dominated habitat types

- Use commercial and non-commercial mechanical treatments, where and when appropriate to improve forest composition and structure. Treatments will favor retention and regeneration of red spruce where and when possible. Composition and structural goals will be driven by focal species habitat requirements.

- Manage this habitat type through accepted silvicultural practices. Methods may include:

  - Single tree or group selection with retention, overstory removal, clearcut, and shelterwood techniques.

  - Treatments timed to optimize the ability of the site to regenerate softwood.

  - When using even-aged treatments:

    - Rotation age for fir will range from 60 to 100 years.

    - Rotation age for spruce will range from 80 to 130 years.

  - The size of each management unit, its silvicultural prescription and rotation age will determine the size of each treatment and the cutting interval.

- Maintain a minimum of 50 percent of deer wintering area as quality shelter at any point in time. Quality shelter is defined as softwood cover over 35 feet tall with 70 percent or higher crown closure (Reay et al., 1990).

Strategies for conifer-hardwood (mixed-wood) habitat type

- Use commercial and non-commercial mechanical treatments, where and when appropriate, to improve forest composition and structure. Treatments will favor retention and regeneration of red spruce where and when possible. Composition and structural goals will be driven by focal species habitat requirements.

- Manage this habitat type through accepted silvicultural practices. Methods may include:

  On softwood-dominated sites (within the mixed-wood habitat type)

  - Single tree or group selection with retention, overstory removal, clearcut, and shelterwood techniques.

  - Treatments timed to optimize the ability of the site to regenerate softwood.

  - When using even-aged treatments:

    - Rotation age for fir will range from 60 to 100 years.

- ❖ Rotation age for spruce will range from 80 to 130 years.

- ❋ The size of each management unit, its silvicultural prescription and rotation age will determine the size of each treatment and the cutting interval.

- ❋ Emphasis on overstory removal techniques that protect softwood regeneration in areas of advanced softwood regeneration.

On hardwood-dominated sites (within the mixed-wood habitat type)

- ❋ Gap-based management (group selection) with retention, with variable group size.

- ❋ Re-entry intervals on the order of 10 to 20 years to promote new cohorts and maintain understory development.

- ❋ Promotion of increased compositional and structural heterogeneity, including dense canopies, large-diameter trees, and large-diameter coarse woody debris and snags.

Strategies for the hardwood-dominated habitat types

- Use commercial and non-commercial mechanical treatments, where and when appropriate to improve forest composition and structure. Composition and structural goals will be driven by focal species habitat requirements.

- Manage this habitat type through accepted silvicultural practices. Methods may include:

  - ❋ Single tree or group selection with retention, overstory removal, clearcut, and shelterwood techniques.

  - ❋ Reentry intervals on the order of 10 to 20 years to promote new cohorts and maintain understory development.

  - ❋ Promotion of increased compositional and structural heterogeneity, including dense canopies, large-diameter trees, and large-diameter coarse woody debris and snags.

  - ❋ When using even-aged treatments:

    - ❖ Rotation age for fir will range from 60 to 100 years

    - ❖ Rotation age for spruce will range from 80 to 130 years.

  - ❋ The size of each management unit, its silvicultural prescription and rotation age will determine the size of each treatment and the cutting interval.

(e) Why is this use being proposed?

The forests of New England have been significantly altered (Marsh 1864; Cronon 1983; Williams 1992; Whitney 1996). The kinds of trees present, their relative numbers, their age, and their distribution across the landscape are very different than what they would be if left to nature. The health and diversity of our forests have been reduced, making them less resilient to climate change, disease, invasive species, and natural events.

Restoration requires an active, hands-on approach, guided by science-based methods. It is an approach that includes tree-planting, harvesting timber, and prescribed burns in order to promote new generations of native trees. More specifically, forest management can improve and accelerate development of historic forest structure and species composition (Seymour, White & deMaynadier 2002; Keeton 2006; Franklin, Mitchell & Palik 2007; North & Keeton 2008; Raymond et al. 2009; Arseneault et al. 2011). In the absence of active management, the development of appropriate wildlife habitat may take longer or fail entirely, depending on site characteristics, prior management history, and natural disturbance frequency. A forest can be actively managed through harvesting practices to mimic natural disturbances and create openings for young trees while also retaining

some larger, older trees. This prescription will also maintain the appropriate forest structure and age or size classes important to focal species into the future, ensuring adequate habitat is always available for species of concern. The refuge lacks the funding, personnel, and equipment to effectively and efficiently manage our forested lands. Engaging private loggers as part of a commercial arrangement is the only practical alternative for accomplishing this work.

In summary, an active forest management program will improve refuge wildlife habitat while contributing to the forest-based economies of communities surrounding the refuge's divisions.

AVAILABILITY OF RESOURCES:

The resources necessary to administer this use are available within current and anticipated refuge budgets. The refuge forester will design and oversee the timber management program, in consultation with the wildlife biologist and refuge manager. Current staffing plans and budgets account for these tasks.

A portion of funds generated by the sale of timber on refuge lands will go into the revenue sharing fund. Another portion will fund the forest management program, including additional stand inventories, timber marking, pre-commercial thinning, and related roadwork. When appropriate, infrastructure maintenance associated with timber sales, such as road maintenance, will be included as a deliverable in SUPs. This flexibility alleviates additional management costs associated with active forest management.

All harvesting is likely to occur near, or from, the existing road networks. There are no expected road construction costs associated with active forest management on refuge property. Funding will be necessary for road maintenance, including grading, installation and replacement of water control structures, etc. The refuge forester will assume contract development and administration, monitoring, and resource database management.

Outside of costs offset by timber sale receipts, required yearly costs to administer an active forest management program on refuge lands is listed below:

Develop prescriptions; circulate prospectuses for bid; sale layout; onsite representative with logger: Refuge Forester	$9,000 (8 weeks/year)
Review forest management actions; on-site monitoring (Refuge Biologist)	$1,700 (1 week/year)
Review proposals, issue special use permits (Refuge Manager)	$1000 (2 days/year)
Total Annual Cost of Program:	**$12,000**

ANTICIPATED IMPACTS OF THE USE:

Commercial forest management to improve wildlife habitat on the refuge could have the following impacts:

Soil Impacts

The construction and maintenance of roads and landings and the operation of heavy equipment may impact soil, causing rutting and erosion (Helfrich, Weigmann & Neves 1998; Wiest 1998; Cullen 2001). To mitigate potential impacts and minimize erosion, timber harvesting and road construction on the refuge will follow the best management practices as recommended by State forestry agencies in New Hampshire, Vermont, Massachusetts, and Connecticut. Soil disturbance following deforestation may increase the export of particulate matter and soil nutrients (Bormann et al. 1968, 1974). To reduce the potential for soil impacts, timber harvesting on the refuge will largely occur during winter months, when snow depths and cold

temperatures reduce soil compaction and erosion. Special caution will apply in areas with hydric, steep, shallow, or easily erodible soils.

Aquatic Resource Impacts

Forest management operations may have significant impacts on both water quantity and water quality. Data from forested experimental watersheds in the eastern United States indicate that leaching of nutrients after timber harvesting, especially clearcutting, tends to increase (Bormann et al. 1968, 1974), while increases in streamwater temperature are highest where regevetation of cutover areas is delayed (Demaynadier & Hunter Jr. 1995; Cullen 2001). These factors may have detrimental effects on stream organisms, including fish, invertebrates, and amphibians (Campbell & Doeg 1989). Poorly planned timber harvests and road construction can alter surface and groundwater hydrology and water storage capability. The effects of multiple harvests in a watershed can accumulate over time.

Maintaining forested buffers near streams and other aquatic resources minimizes impacts on water resources and water quality (Osborne & Kovacic 1993; Castelle, Johnson & Conolly 1994; Wilkerson et al. 2006; Bennett 2010). Road construction, skid trail planning, harvest operation and stream crossings will, at a minimum, follow the best management practices promulgated by each state's forestry agency to minimize the alteration of hydrology and the impacts of siltation on water quality. Harvesting will use existing forest roads whenever possible; construction of new roads will be kept to a minimum.

Wildlife and Vegetation Impacts

Commercial forest management can have a number of localized and broader impacts on wildlife-related components of forests including: damage to understory vegetation (Scheller & Mladenoff 2002), alteration of microhabitat environments (Demaynadier & Hunter Jr. 1995), changes in the abundance and type of coarse woody debris (Demaynadier & Hunter Jr. 1995; Siitonen 2001), and removal of snags important to wildlife (e-CFR). Less downed wood and fewer large-diameter logs are likely to accumulate under a short-rotation (less than 50 years) harvest, whole-tree harvests, and selection cuts than would occur under long rotations or in uncut forests, affecting soil moisture regimes and forest floor amphibians and small mammals (Gore & Patterson III 1986; Demaynadier & Hunter Jr. 1995). Damage to uncut trees from heavy equipment may create entry points for invasion by insects or disease (Nichols, Lemin Jr. & Ostrofsky 1994). Harvesting may also leave the remaining trees more susceptible to wind throw (Ruel 1995), facilitate the spread of invasive plants (Sakai et al. 2001), and disturb wildlife temporarily (Demaynadier & Hunter Jr. 1995; Campbell, Witham & Hunter 2007; Holmes & Pitt 2007).

Mitigation of much of these impacts is possible through careful planning and implementation. Seasonal restrictions on harvesting will minimize disturbance of wildlife and damage to residual trees or understory vegetation. The careful layout of skid trails, the use of mechanical harvesters and forwarders, and the pre-harvest surveys of resources of concern will minimize impacts. Contracts will require contractors to leave an appropriate volume of tops, branches, and other downed wood onsite whenever possible.

Under refuge management, average forest age and size class, along with canopy closure will increase over the long term. Prescriptions will generally mimic the natural disturbance patterns common to the forest type being treated (Seymour and Hunter Jr. 2000; Seymour, White and deMaynadier 2002; Fraver, White and Seymour 2009). However, some species-specific management will require younger age classes be present on the landscape (Lambert & Faccio 2005; Donovan 2006; U.S. Department of the Interior, Fish and Wildlife Service 2006; Chace, Faccio & Chacko 2009). In northern divisions, the component of softwood-species within refuge matrix forest will increase. Habitat connectivity will increase; fragmentation of forested habitats will decrease.

The northern long-eared bat (Myotis septentrionalis) was recently listed as federally threatened under the Endangered Species Act because of the devastating impacts of white-nose syndrome (80 FR 17974-18033). All of the current refuge units and divisions and proposed CFAs are in the northern long-eared bats historic range. When the species was listed, the Service issued an interim 4(d) rule that states: "In areas currently known to be affected by [white-nose syndrome], all incidental take prohibitions apply, except that take attributable to forest management practices…and limited tree removal projects shall be excepted from the take prohibition, provided these activities protect known maternity roosts and hibernacula. Further, removal of hazardous trees

for the protection of human life or property shall be excepted from the take prohibition." The rule then outlines the following specific stipulations that exempt forest management from the prohibition on take:

- For such take to be excepted, the activity must:
  - Occur more than 0.25 mile (0.4 kilometer) from a known, occupied hibernacula.
  - Avoid cutting or destroying known, occupied roost trees during the pup season (June 1 to July 31).
  - Avoid clearcuts (and similar harvest methods, e.g., seed tree, shelterwood, and coppice) within 0.25 mile (0.4 kilometer) of known, occupied roost trees during the pup season (June 1 to July 31).

We do not expect any negative impacts to northern long-eared bats from forest management on the refuge because we will follow the stipulations outlined in the 4(d) rule and will also continue to consult with the Service's Ecological Services program to ensure our habitat management does not negatively impact the species.

Visitor Impacts

Logging may disturb refuge visitors, cause safety issues, or detract from visitors' aesthetic experience. When safety considerations warrant, areas of the refuge undergoing active management will be temporarily closed. Trails will either be closed or shared with logging trucks depending on the availability of feasible alternatives. Because small portions of the refuge's acreage will be actively harvested at any one time, impacts to visitors will be minimal.

PUBLIC REVIEW AND COMMENT:

A finding of appropriateness and this compatibility determination were distributed for public comment for 90 days from August 18, 2015 to November 16, 2015 as part of the review of the Silvio O. Conte Refuge's draft CCP/EIS. Comments we received on this use were considered as we developed this final determination. This determination will undergo another 30-day review with release of the final CCP/EIS. A summary of comments received on the draft plan is included in appendix O of the final CCP/EIS.

DETERMINATION (CHECK ONE BELOW):

_____Use is not compatible

__X____Use is compatible, with the following stipulations

STIPULATIONS NECESSARY TO ENSURE COMPATIBILITY:

- Protection of refuge resources of concern is the top priority. Active management will follow the best management practices for wildlife habitat and timber harvest recommended by each State's forestry agencies: Vermont Department of Forests, Parks, and Recreation; New Hampshire Department of Resources and Economic Development - Division of Lands; Massachusetts Department of Conservation and Recreation; and the Connecticut Department of Energy and Environmental Protection.

- Where federally listed species occur, forest management activities may require Section 7 consultation under the Endangered Species Act. To protect the federally threatened northern long-eared bat, forest management activities must:
  - Occur more than 0.25 mile (0.4 kilometer) from a known, occupied northern long-eared bat hibernacula.
  - Avoid cutting or destroying known, occupied northern long-eared bat roost trees during the pup season (June 1 to July 31).
  - Avoid clearcuts (and similar harvest methods, e.g., seed tree, shelterwood, and coppice) within 0.25 mile (0.4 kilometer) of known, occupied roost trees during the northern long-eared bat pup season (June 1 to July 31).

- State recommended best management strategies and buffer distances will be implemented as appropriate. In some instances, the refuge may exceed state recommendations for specific resource protection objectives.

- Roads, skid trails, water crossings, and landings will be sited to minimize damage to resources; roads and skid trails will be stabilized after harvesting.

- Snags, live cavity trees, and large coarse woody debris will be retained, as appropriate, to meet refuge objectives. The creation of snags, live cavity trees, or coarse woody debris, or the removal of individual trees or groups of trees may occur in any area of the refuge for specific wildlife management or safety purposes at the discretion of the refuge forester.

- Resource surveys identifying items of concern will be a consistent part of pre-management planning efforts. During management activities impacts to resources of concern will be minimized or eliminated.

- Active forest management will occur when site-specific soil conditions are appropriate to minimize negative impacts to soils and water quality. Timing of management activities will minimize impacts on wildlife (e.g., outside raptor or colonial bird nesting seasons). The refuge manager reserves the right to temporarily suspend harvesting operations during such times as these activities would result in serious consequences to forest soils.

- The SUP holder will ensure that all equipment is maintained such that hazardous waste (e.g., oil, hydraulic fluid) does not come into contact with the ground. If there are any spills, clean-up will commence immediately.

- The permittee is required to clean all harvesting equipment prior to transport onto the refuge to prevent introduction of nonnative plant species. Use of a high pressure washer is highly recommended. Prior to entering upon refuge property, equipment may be inspected by the refuge for presence of plant material, seeds, etc. Equipment presenting a high risk of contamination may be cleaned and re-inspected before being allowed on the refuge property.

- Location of access roads, major skid trails, and log landing or yards shall be approved by the refuge before establishment and/or use.

- The refuge manager may modify the SUP to protect any sensitive cultural resources area, object of antiquity, artifact, or similar object which is entitled to protection under the Antiquities Act of 1906, Archeological Resources Protection Act of 1979 and National Historic Preservation Act of 1966. Discovery of such areas or objects by either party shall be promptly reported to the other party.

- The permitee shall take all reasonable and practical action to prevent fires resulting from the permittee's operations. The refuge manager may suspend operations in the case of high fire danger.

- When management outcome allows, whole-tree harvesting will be discouraged. Contractors will be required to leave tops, branches, and other wood debris onsite.

- Any forest management on hydric soils will occur during frozen conditions. Slopes over 30 percent will forbid the use of any heavy equipment.

- Except at the refuge manager's discretion to meet specific management objectives for wildlife or habitat, no forest management will occur in the following forested wetlands: floodplain forest, northern white cedar, black spruce, and hardwood swamps.

- The permittee will be required to maintain the appropriate level of liability and workers' compensation insurance and to indemnify and save harmless the Government from claims as specified in the project-specific SUP.

- All operations in connection with harvesting and the removal of timber shall be subject to fire, safety,

security, and other rules and regulations necessary for the protection of the Government personnel and property as may be prescribed by Government officials. All operations must conform to Occupational, Safety, and Health Administration (OSHA) requirements for logging safety standards as prescribed in 29 CFR part 1910.266 and 29 CFR part 1910.47 and 29 CFR part 1910.1200.

- The permittee shall provide the Service with copies of scale receipts upon request. The Service reserves the right to stop logging operations if proper scale receipts are unnecessarily delayed.
- Other project-specific stipulations may be included in SUPs.

JUSTIFICATION:

This use is determined to be compatible, provided the stipulations necessary to ensure its compatibility are implemented. Commercial forest management to improve wildlife habitat will contribute to the purposes for which the refuge was established and the mission of the Refuge System, and facilitate the ability of the refuge to meet its wildlife management objectives. The use will not pose significant adverse effects on refuge resources, interfere with the public use of the refuge, or cause an undue administrative burden. The forest management program may adapt to insure its continued compatibility. Forest management will not materially interfere with, or detract from the mission of the Refuge System or the purposes for which the refuge was established. Commercial forest management will contribute to the refuge's purposes and help meet refuge habitat and species goals by improving habitat conditions for native wildlife species, particularly forest-dependent migratory birds.

SIGNATURE:

Refuge Manager: _____ _____
(Signature) (Date)

CONCURRENCE:

Regional Chief: _____ _____
(Signature) (Date)

MANDATORY 10-YEAR RE-EVALUATION DATE:

_____

LITERATURE CITED:

Arseneault, J.E., Saunders, M.R., Seymour, R.S. & Wagner, R.G. (2011) First decadal response to treatment in a disturbance-based silviculture experiment in Maine. *Forest Ecology and Management*, 262, 404–412.

Bennett, K.P. (ed). (2010) *Good Forestry in the Granite State: Recommended Voluntary Forest Management Practices for New Hampshire*, 2nd ed. University of New Hampshire, Cooperative Extension, Durham, NH.

Bormann, F.. H., Likens, G.E., Fisher, D.W. & Pierce, R.S. (1968) Nutrient loss accelerated by clear-cutting of a forest ecosystem. *Science*, 159, 882–884.

Bormann, F.H., Likens, G.E., Siccama, T.G., Pierce, R.S. & Eaton, J.S. (1974) The export of nutrients and recovery of stable conditions following deforestation at Hubbard Brook. *Ecological Monographs*, 44, 255–277.

Bryan, R.R. (2003) *Long-Term Impacts of Timber Harvesting on Stand Structure in Northern Hardwood and Spruce-Fir Forests: Implications for Biodiversity and Timber Production*. Maine Audubon.

Campbell, I. & Doeg, T. (1989) Impact of timber harvesting and production on streams: A review. *Marine and Freshwater Research*, 40, 519–539.

Campbell, S.P., Witham, J.W. & Hunter, M.L. (2007) Long-term effects of group-selection timber harvesting on abundance of forest birds. *Conservation Biology*, 21, 1218–1229.

Castelle, A.J., Johnson, A.W. & Conolly, C. (1994) Wetland and stream buffer size requirements—a review. *Journal of Environmental Quality*, 23, 878–882.

Chace, J.F., Faccio, S.D. & Chacko, A. (2009) Canada warbler habitat use of northern hardwoods in Vermont. *Northeastern Naturalist*, 16, 491–500.

Cronon, W. (1983) *Changes in the Land: Indians, Colonists, and the Ecology of New England*, 1st ed. Hill and Wang, New York.

Crow, T.R., Buckley, D.S., Nauertz, E.A. & Zasada, J.C. (2002) Effects of management on the composition and structure of northern hardwood forests in upper Michigan. *Forest Science*, 48, 129–145.

Cullen, J.B. (ed). (2001) *Best Management Practices for Erosion Control on Timber Harvesting Operations in New Hampshire*. University of New Hampshire Cooperative Extension.

Demaynadier, P.G. & Hunter Jr., M.L. (1995) The relationship between forest management and amphibian ecology: a review of the North American literature. *Environmental Review*, 3, 230–261.

Donovan, G. (2006) Woodcock habitat guidelines.

E-CFR: Title 29: Labor PART 1910—OCCUPATIONAL SAFETY AND HEALTH STANDARDS Subpart R—Special Industries.

Foster, B.C., Wang, D., Keeton, W.S. & Ashton, P.M.S. (2010) Implementing sustainable forest management using six concepts in an adaptive management framework. *Journal of Sustainable Forestry*, 29, 79–108.

Franklin, J.F., Mitchell, R.J. & Palik, B.J. (2007) *Natural Disturbance and Stand-Development Principles for Ecological Forestry*. Research Paper, U.S. Department of Agriculture, Forest Service, Northern Research Station, Newtown Square, PA.

Fraver, S., White, A.S. & Seymour, R.S. (2009) Natural disturbance in an old-growth landscape of northern Maine, USA. *Journal of Ecology*, 97, 289–298.

Gore, J.A. & Patterson III, W.A. (1986) Mass of downed wood in northern hardwood forests in New Hampshire: potential effects of forest management. *Canadian Journal of Forest Research*, 16, 335–339.

Helfrich, L.A., Weigmann, D.L. & Neves, R.J. (1998) *Landowner's Guide to Managing Streams in the Eastern United States*. Virginia Cooperative Extension, Blacksburg, VA.

Hines, S.J., Heath, L.S. & Birdsey, R.A. (2010) *An Annotated Bibliography of Scientific Literature on Managing Forests for Carbon Benefits*. General Technical Report, U.S. Department of Agriculture, Forest Service, Northern Research Station, Newtown Square, PA.

Holmes, S.B. & Pitt, D.G. (2007) Response of bird communities to selection harvesting in a northern tolerant hardwood forest. *Forest Ecology and Management*, 238, 280–292.

Keeton, W.S. (2006) Managing for late-successional/old-growth characteristics in northern hardwood-conifer forests. *Forest Ecology and Management*, 235, 129–142.

Kenefic, L.S. & Nyland, R.D. (2000) *Habitat Diversity in Uneven-Aged Northern Hardwood Stands: A Case Study*. Research Paper, U.S. Department of Agriculture, Forest Service, Northeastern Research Station, Newtown Square, PA.

Lambert, J.D. & Faccio, S.D. (2005) *Canada Warbler: Population Status, Habitat Use, and Stewardship Guidelines for Northeastern Forests*. VINS Technical Report, Vermont Institute of Natural Sciences, Woodstock, VT.

Leak, W.B. (1975) *Influence of Residual Stand Density on Regeneration of Northern Hardwoods*. Research Paper, U.S. Department of Agriculture, Forest Service, Northeastern Forest Experiment Station, Upper Darby, PA.

Leak, W.B. (2003) Regeneration of patch harvests in even-aged northern hardwoods in New England. *Northern Journal of Applied Forestry*, 20, 188–189.

Leak, W.B. (2005) Effect of small patch cutting on sugar maple regeneration in New Hampshire northern hardwoods. *Northern Journal of Applied Forestry*, 22, 68–70.

Marsh, G.P. (1864) *Man and Nature: Physical Geography as Modified by Human Action* (ed D Lowenthal). Belknap Press of Harvard University Press, Cambridge, Mass.

Nichols, M.T., Lemin Jr., R.. . & Ostrofsky, W.D. (1994) The impact of two harvesting systems on residual stems in a partially cut stand of northern hardwoods. *Canadian Journal of Forest Research*, 24, 350–357.

North, M.P. & Keeton, W.S. (2008) Emulating natural disturbance regimes: an emerging approach for sustainable forest management. *Patterns and Processes in Forest Landscapes - Multiple Use and Sustainable Management* (eds R. Lafortezza, J. Chen, G. Sanesi & T.R. Crow), pp. 341–372. Springer-Verlag, The Netherlands.

Osborne, L.L. & Kovacic, D.A. (1993) Riparian vegetated buffer strips in water-quality restoration and stream management. *Freshwater Biology*, 29, 243–258.

Raymond, P., Bédard, S., Roy, V., Larouche, C. & Tremblay, S. (2009) The irregular shelterwood system: review, classification, and potential application to forests affected by partial disturbances. *Journal of Forestry*, 107, 405–413.

Ruel, J.-C. (1995) Understanding windthrow: silvicultural implications. *The Forestry Chronicle*, 71, 434–445.

Sakai, A.K., Allendorf, F.W., Holt, J.S., Lodge, D.M., Molofsky, J., With, K.A., Baughman, S., Cabin, R.J., Cohen, J.E., Ellstrand, N.C., McCauley, D.E., O'Neil, P., Parker, I.M., Thompson, J.N. & Weller, S.G. (2001) The population biology of invasive species. *Annual Review of Ecology and Systematics*, 32, 305–332.

Scheller, R.M. & Mladenoff, D.J. (2002) Understory species patterns and diversity in old-growth and managed northern hardwood forests. *Ecological Applications*, 12, 1329–1343.

Seymour, R.S. & Hunter Jr., M.L. (1992) *New Forestry in Eastern Spruce-Fir Forests: Principles and Applications to Maine*. Miscellaneous Publication 716, University of Maine, College of Forest Resources, Maine Agricultural Experiment Station, Orono, ME.

Seymour, R.S. & Hunter Jr., M.L. (2000) Principles of ecological forestry. *Maintaining Biodiversity in Forest Ecosystems*, 1st ed pp. 22–61. Cambridge University Press.

Seymour, R.S., White, A.S. & deMaynadier, P.G. (2002) Natural disturbance regimes in northeastern North America--evaluating silvicultural systems using natural scales and frequencies. *Forest Ecology and Management*, 155, 357–367.

Siitonen, J. (2001) Forest management, coarse woody debris and saproxylic organisms: Fennoscandian Boreal Forests as an example. *Ecological Bulletins*, 11–41.

U.S. Department of the Interior, Fish and Wildlife Service. (2006) Final environmental assessment: woodcock habitat management at the Nulhegan Basin Division of the Silvio O. Conte National Fish and Wildlife Refuge.

Whitney, G.G. (1996) *From Coastal Wilderness to Fruited Plain: A History of Environmental Change in Temperate North America from 1500 to the Present*. Cambridge University Press.

Wiest, R.L. (1998) *A Landowner's Guide to Building Forest Access Roads*. U.S. Department of Agriculture, Forest Service, Northeastern Area State and Private Forestry, Radnor, PA.

Wilkerson, E., Hagan, J.M., Siegel, D. & Whitman, A.A. (2006) The Effectiveness of Different Buffer Widths for Protecting Headwater Stream Temperature in Maine. *Forest Science,* 52, 221–231.

Williams, M. (1992) *Americans and Their Forests: A Historical Geography.* Cambridge University Press.

FWS Form 3-2319
02/06

FINDING OF APPROPRIATENESS OF A REFUGE USE

Refuge Name: Silvio O. Conte National Fish and Wildlife Refuge

Use: Commercial Guiding for Wildlife-dependent Recreation

This form is not required for wildlife-dependent recreational uses, take regulated by the State, or uses already described in a refuge CCP or step-down management plan approved after October 9, 1997.

Decision Criteria:	**YES**	**NO**
(a) Do we have jurisdiction over the use?	✔	
(b) Does the use comply with applicable laws and regulations (Federal, State, Tribal, and local)?	✔	
(c) Is the use consistent with applicable Executive orders and Department and Service policies?	✔	
(d) Is the use consistent with public safety?	✔	
(e) Is the use consistent with goals and objectives in an approved management plan or other document?	✔	
(f) Has an earlier documented analysis not denied the use or is this the first time the use has been proposed?	✔	
(g) Is the use manageable within available budget and staff?	✔	
(h) Will this be manageable in the future within existing resources?	✔	
(i) Does the use contribute to the public's understanding and appreciation of the refuge's natural or cultural resources, or is the use beneficial to the refuge's natural or cultural resources?	✔	
(j) Can the use be accommodated without impairing existing wildlife-dependent recreational uses or reducing the potential to provide quality (see section 1.6D, 603 FW 1, for description), compatible, wildlife-dependent recreation into the future?	✔	

Where we do not have jurisdiction over the use ["no" to (a)], there is no need to evaluate it further as we cannot control the use. Uses that are illegal, inconsistent with existing policy, or unsafe ["no" to (b), (c), or (d)] may not be found appropriate. If the answer is "no" to any of the other questions above, we will generally not allow the use.

If indicated, the refuge manager has consulted with State fish and wildlife agencies. Yes___✔___No _____.

When the refuge manager finds the use appropriate based on sound professional judgment, the refuge manager must justify the use in writing on an attached sheet and obtain the refuge supervisor's concurrence.

Based on an overall assessment of these factors, my summary conclusion is that the proposed use is:

Not Appropriate _____ **Appropriate** ___✔___

Refuge Manager: _____ Date: _____

If found to be **Not Appropriate**, the refuge supervisor does not need to sign concurrence if the use is a new use.

If an existing use is found **Not Appropriate** outside the CCP process, the refuge supervisor must sign concurrence.

If found to be **Appropriate**, the refuge supervisor must sign concurrence:

Refuge Supervisor: _____ Date: _____

A compatibility determination is required before the use may be allowed.

603 FW 1
Exhibit 1
Page 2

JUSTIFICATION FOR A FINDING OF APPROPRIATENESS OF A REFUGE USE

Refuge Name: Silvio O. Conte National Fish and Wildlife Refuge

Use: Commercial Guiding for Wildlife-dependent Recreation

NARRATIVE:

Refuge visitors enjoy participating in wildlife-dependent priority public uses (e.g., wildlife observation and photography, hunting, and fishing), but many may not have the local knowledge, skills, or equipment to come to Silvio O. Conte National Fish and Wildlife Refuge and engage in these activities. Commercial guides would help facilitate a safe and high-quality priority public use experience, and facilitate observation and appreciation by participants and observers of the refuge's wildlife, habitats, and conservation programs.

By allowing this activity, refuge staff anticipates more visitors would be exposed to the refuge and the National Wildlife Refuge System (Refuge System), and this exposure may lead to a better understanding of the importance of the Refuge System to wildlife conservation and to the American people.

For these reasons, we have determined that commercial guiding is consistent with the U.S. Fish and Wildlife Service's policy on the appropriateness of refuge uses (603 FW 1).

This finding of appropriateness and the compatibility determination for this use was distributed for public comment for 90 days from August 18, 2015 to November 16, 2015 as part of the review of the Silvio O. Conte Refuge's draft CCP/EIS. Comments we received on this use were considered as we developed this final determination. A summary of comments received on the draft plan is included in appendix O of the final CCP/EIS. This finding will undergo another 30-day review with release of the final CCP/EIS.

COMPATIBILTY DETERMINATION

USE:

Commercial Guiding for Wildlife-dependent Recreation

REFUGE NAME:

Silvio O. Conte National Fish and Wildlife Refuge (Conte Refuge)

DATE ESTABLISHED:

October 3, 1997

ESTABLISHING AND ACQUISITION AUTHORITY(IES):

- Silvio O. Conte National Fish and Wildlife Refuge Act (Public Law 102-212).
- Migratory Bird Conservation Act of 1929.
- Land and Water Conservation Fund Act of 1965.

REFUGE PURPOSE(S):

- To conserve, protect, and enhance the Connecticut River populations of Atlantic salmon, American shad, river herring, shortnose sturgeon, bald eagles, peregrine falcons, osprey, black ducks, and other native species of plants, fish, and wildlife.
- To conserve, protect, and enhance the natural diversity and abundance of plant, fish and wildlife species and the ecosystem upon which these species depend within the refuge.
- To protect species, listed as endangered or threatened, or identified as candidates for listing, pursuant to the Endangered Species Act of 1973 (ESA) as amended (16 U.S. 1531 et seq.).
- To restore and maintain the chemical, physical, and biological integrity of wetland and other waters within the refuge.
- To fulfill the international treaty obligations of the United States relating to fish and wildlife and wetlands.
- To provide opportunities for scientific research, environmental education, and fish and wildlife oriented recreation and access to the extent compatible with the other purposes stated in this section.

NATIONAL WILDLIFE REFUGE SYSTEM MISSION:

To administer a national network of lands and waters for the conservation, management, and where appropriate, restoration of the fish, wildlife, and plant resources and their habitats within the United States for the benefit of present and future generations of Americans.

DESCRIPTION OF USE:

(a) What is the use? Is the use a priority use?
The use is commercially guided priority public use activities (hunting, fishing, wildlife observation, photography, environmental education, and interpretation). Commercial guiding is the act of accompanying or assisting any person engaged in a wildlife-dependent public use, in exchange for remuneration for those services.

To date, only a few individuals interested in offering this service have inquired about obtaining special use permits (SUPs), and citizens have occasionally inquired about the availability of such services. Only priority public use activities (hunting, fishing, wildlife observation, photography, environmental education, and interpretation) are covered by this determination. Requests for any additional activities would be considered in the future on a case-by-case basis.

Commercial guiding is not a priority public use of the National Wildlife Refuge System (Refuge System) under the National Wildlife Refuge System Administration Act of 1966 (16 U.S.C. 668dd-668ee), as amended by the National Wildlife Refuge System Improvement Act of 1997. Commercial guiding is considered to be an economic use under 50 CFR. 29.1. Therefore, this use must contribute to the purposes for which the refuge was established or the mission of the Refuge System. Commercial guiding for hunting, fishing, wildlife observation, photography, environmental education, and interpretation can contribute to the fulfillment of refuge purposes and to the Refuge System Mission by facilitating priority and/or compatible public uses.

(b) Where would the use be conducted?
These activities take place on all refuge divisions open to the identified public uses, including lands acquired in the future pursuant to the final comprehensive conservation plan (e.g., McConnell Pond tract at Nulhegan Basin Division, or any of the conservation focus areas). The same areas currently used by non-guided visitors for wildlife observation, wildlife photography, hunting, fishing, environmental education, and interpretation would therefore also be available for commercially guided visitors. Although current use levels are modest, if user conflicts arise in the future, commercial activities could be restricted to certain areas or times to minimize such conflicts. Refuge approval and a SUP are required for access outside of these areas.

(c) When would the use be conducted?
These activities would take place year-round, subject to the refuge-specific regulations or laws governing the individual public use. Commercial guiding would only occur during daylight hours (one-half hour before sunrise until one-half hour after sunset). The refuge must approve any requests for guiding outside of these hours. If approved, the hours permitted will be included in the SUP.

(d) How would the use be conducted?
With the exception of the ability to charge guests for services rendered, this use will not impart any additional privileges beyond those available to all refuge users. Commercial guides would be allowed to operate on refuge lands through a formal process, including the issuance of a SUP. The refuge manages commercial guiding activities at a level that is compatible with refuge purposes and that ensures high-quality guiding services are available for the public. If approved, SUPs would be mailed within 2 weeks of the request. If not approved, the entire application package (including the payment check) would be returned via mail. Application packages containing false statements or fraudulent or misleading information will be denied and the application fee will be forfeited.

All SUP activities are regulated by provisions listed in 50 CFR, subpart D-Permits, 25.41 - 45. The permittee would be required to comply with all Department of the Interior, U.S. Fish and Wildlife Service (Service), and Federal, State, and local laws in the conduct of their business. Because this is an economic use of the refuge, it is also subject to other applicable laws and regulations (see 50 CFR 29.1).

The number of permittees for a particular activity is not presently limited by the refuge; however, restrictions may be placed on the quantity, time, and location of activities as deemed appropriate to sustain the resource and the quality of experience for other refuge visitors. If we determine that limits on the number of permittees is necessary, we would follow the procedures outlined in the Service's Refuge Manual (5 RM 17.11) and other applicable laws and regulations (see also 50 CFR 29.1) when selecting permittees and administering this use. Whenever possible, these restrictions would be clearly explained on the permit; however, the refuge reserves the right to enforce further restrictions or to change the restrictions by amending the permit at any time during the permit period when deemed appropriate for the protection of the resource and the quality of experience for the general public.

Commercial guiding may be conducted by automobile and bicycle on designated refuge roads open to these uses. It may also be conducted by boat in waters open to boating. Commercial guiding can also occur by foot, snowshoe, and cross-country skis in areas of the refuge open to these uses. Visitors participating in approved public uses are generally allowed off trail; however, off-trail use is limited to pedestrian access only (e.g., walking, snowshoeing, and cross-country skiing). In addition, commercial guiding for hunting that uses draft horses to recover downed moose as part of the service, would be allowed by SUP.

The permittee must comply with the refuge regulations and SUP conditions listed under "Stipulations Necessary to Ensure Compatibility," unless an exception is allowed in the SUP.

(e) Why is the use being proposed?
We would allow commercial guiding to facilitate and enhance the experience of visitors while participating in wildlife-dependent priority public uses because many visitors may not have the knowledge, skills, confidence, or equipment to explore the division and engage in these activities on their own. Commercial guides would help facilitate a safe and high-quality priority public use experience, and facilitate observation and appreciation by participants and observers of the division's wildlife and habitats. Because it will generate a minimal amount of economic activity, this use is also likely to be supported by the local communities, especially communities in northern Vermont and New Hampshire where economic activity is limited, and as such engender support for the refuge. Because commercial guiding is considered an economic use, per Federal law (see 16 USC 715s) and Service regulations (50 CFR 29.1), we may only allow economic uses of a refuge natural resource where the use contributes to achieving refuge purposes or the Refuge System mission.

AVAILABILITY OF RESOURCES:

The staff time associated with administering the use will primarily be related to processing annual SUPs, answering questions of permitees concerning permit conditions, monitoring compliance with permit conditions, and monitoring potential impacts of the use on division's resources and visitors. The use will be administered by the wildlife refuge manager. Resource impacts will be monitored by the wildlife biologist, and the federal wildlife officer will monitor compliance with the SUP. No special or new equipment, facilities, staff, or resources are needed to administer this use.

We estimate below the annual costs associated with the administration of commercial guiding on the division.

Program Oversight (wildlife refuge manager):	$1,200
Processing Special Use Permits/Monitoring Resource Impacts (wildlife biologist):	$1,800
SUP compliance (federal wildlife officer):	$1,400
Total Annual Cost of Program:	**$4,400**

Fees would be assessed with each permit, and shall be set, when possible, to recover the costs of administering specialized uses including guiding (Refuge Manual 17.8, 17.9).

ANTICIPATED IMPACTS OF THE USE:

Commercial guiding of priority public uses can have positive or negative impacts to the division's wildlife and habitats.

The positive impacts of this use includes providing visitors with a better appreciation and more complete understanding of the division's wildlife and habitats, and perhaps engaging visitors who would not otherwise choose to experience the division due to their perception of its remoteness. This can translate into more widespread and stronger support for the refuge, the Refuge System, and the Service, as well as wildlife conservation in general.

The negative effects of this use includes impacts to plants, soils, hydrology, and wildlife from visitor participation in the six priority public uses–uses which are presently allowed and would occur with or without commercial guiding. The impacts associated with the priority public uses are discussed in detail under their respective compatibility determinations. Below is a summary of potential impacts associated with common aspects of the priority public uses, including certain methods of access.

Vegetation impacts:

Pedestrian travel can have indirect impacts to plants by compacting soils and diminishing soil porosity, aeration, and nutrient availability that affect plant growth and survival (Kuss 1986). The entire Nulhegan Basin Division is available for pedestrian travel; visitors may navigate the myriad network of former logging roads, skid trails, and game trails, or they may simply "bushwhack" cross-country, whereas visitor access is restricted at the other divisions. Most environmental education and interpretation visits will occur along hardened trails, so vegetation impacts are unlikely. With an estimate of fewer than 2,000 annual backcountry visits to the refuge's proposed 200,000 acre landscape, direct impacts to plants are not anticipated with the other priority uses.

People can be vectors for invasive plants when seeds or other propagules are moved from one area to another. The threat of invasive plant establishment would always be an issue requiring annual monitoring, and when necessary, treatment. Staff would work to educate the visiting public to reduce introductions and would also monitor and control invasive species.

Similar to the impacts to vegetation from foot travel, effects on vegetation from skiing and snowshoeing are expected to be minimal. Skiing and snowshoeing are limited to winter and require sufficient snow cover to allow access. Vegetation is largely dormant during the winter and would largely be protected by a surface layer of snow. In addition, skis and snowshoes are designed to distribute weight, decreasing the potential for compacting or eroding soils and trampling vegetation.

Soils impacts:

Soils can be compacted and eroded as a result of continued use of pedestrian routes (Cole and Landres 1995). It is anticipated that some soil erosion would occur as a result of continuing pedestrian access on designated routes, which would most likely occur with guided environmental education and interpretation visits. Given the highly dispersed nature of wildlife observation, photography, hunting, and fishing, impacts to soils (erosion, compaction) are not likely to be significant at current and anticipated usage levels.

Effects on soils from skiing and snowshoeing are expected to be minimal. Skiing and snowshoeing are limited to winter and require sufficient snow cover to allow access. When these activities are occurring, soils also would largely be protected by a surface layer of snow. In addition, skis and snowshoes are designed to distribute weight, decreasing potential for compacting or eroding soils. However, given the time of year, locations, and methods used, skiing and snowshoeing are not expected to significantly affect soils on the refuge at current or projected levels of use.

The majority of boat use that occurs on the refuge is non-motorized through the use of canoes and kayaks. When motors are used they are either low horsepower or electric trolling motors and must adhere to a 5-mile per hour speed limit. Therefore we do not anticipate any significant bank erosion due to boat wakes.

Hydrologic impacts:

Roads and trails can affect the hydrology of an area, primarily through alteration of drainage patterns. It is anticipated that existing roads and trails would continue to influence hydrology regardless of pedestrian travel. Maintenance would be required to create adequate and proper drainage to avoid hydrologic impacts. Trail construction may also cause erosion and run-off of sediment into nearby waterways from exposed soils.

Slight erosion may occur along the formal trails commonly used for environmental education and interpretation and some minor amount of sediment may enter waterways at those locations where trails adjoin streams. Properly sited, designed, and maintained trails minimize this impact. Based on the current and anticipated levels of use, pedestrian travel is not likely to significantly increase erosion, incision, or stream alteration. Therefore, no significant hydrologic impacts are anticipated from this use.

Motorboats and other pollutants, human waste, and litter can have negative impacts on water quality. Extensive water quality testing has not been performed at any of the divisions and therefore the levels of

pollutants from boat fuel and impacts on local aquatic systems are unknown. Hydrocarbon contamination can be harmful to fish. Currently, boating activity is light and most is non-motorized so we feel there is little contamination coming from this source.

Wildlife impacts:

Disturbances vary with the wildlife species involved and the type, level, frequency, duration and the time of year such activities occur. The responses of wildlife to human activities includes: avoidance or departure from the site (Owen 1973, Burger 1981, Kaiser and Fritzell 1984, Korschen et al. 1985, Henson and Grant 1991, Kahl 1991, Klein 1993, Whittaker and Knight 1998), use of sub-optimal habitat (Erwin 1980, Williams and Forbes 1980), altered behavior or habituation to human disturbance (Burger 1981, Korschen et al. 1985, Morton et al. 1989, Ward and Stehn 1989, Havera et al. 1992, Klein 1993), attraction (Whittaker and Knight 1998), and an increase in energy expenditure (Morton et al. 1989, Belanger and Bedard 1990). Knight and Cole (1991) suggest recreational activities occurring simultaneously may have a combined negative impact on wildlife. Hammitt and Cole (1998) concluded that the frequent presence of humans in wildland areas can dramatically change the normal behavior of wildlife mostly through "unintentional harassment." These responses can have negative impacts to wildlife such as mammals becoming habituated to humans making them more susceptible to hunting mortality. Human induced avoidance by wildlife can prevent animals from using otherwise suitable habitat. Seasonal sensitivities can compound the effect of disturbance on wildlife. Both bird and mammal species which are present and active during the winter have the added environmental stressors of severe weather and food shortages, and can be more negatively affected than they would from the same level of disturbance during the warmer seasons (Hammit and Cole 1998). However, many migratory birds are not present in the winter, and most resident species are not breeding or raising young during the time of year when cross-country skiing and snowshoeing occur. Additionally, many mammal species are less active during winter months.

Summary of impacts:

Opening the division to commercial guiding could result in a minimal increase in the number of visitors to the refuge and likewise increase the number of larger groups (4 or more people) visiting the various divisions. Resource impacts, however, are not expected to be any greater than those resulting from the existing, approved wildlife-dependent public uses. Commercial guides and their clients would be required to comply with all of the existing stipulations for authorized public uses. In addition, commercial guides would be required to comply with the stipulations noted below and would be routinely checked by the refuge's federal wildlife officer for compliance with regulations and permit conditions. Permit conditions and stipulations are designed to minimize potential impacts. Although a substantial increase in the cumulative impacts from public use is not expected in the near term, refuge staff would monitor impacts of this use and respond, if necessary, to conserve the existing high quality of refuge resources.

PUBLIC REVIEW AND COMMENT:

A finding of appropriateness and this compatibility determination were distributed for public comment for 90 days from August 18, 2015 to November 16, 2015 as part of the review of the Silvio O. Conte Refuge's draft CCP/EIS. Comments we received on this use were considered as we developed this final determination. This determination will undergo another 30-day review with release of the final CCP/EIS. A summary of comments received on the draft plan is included in appendix O of the final CCP/EIS.

DETERMINATION (CHECK ONE BELOW):

____ Use is not compatible

__X__ Use is compatible, with the following stipulations

STIPULATIONS NECESSARY TO ENSURE COMPATIBILITY:

The following stipulations apply to SUPs issued for commercially guided recreational activities. Continuing law enforcement and administrative monitoring of permittees would be carried out to ensure compliance with the following conditions that are incorporated into all permits in order to minimize impacts on refuge lands and resources.

- Permittee agrees to hold the U.S. Government harmless from liability for any accident/injury to their clients or employees resulting from their activities being authorized by this permit. The permittee must provide adequate and appropriate liability insurance (a Certificate of Insurance with adequate Comprehensive General Liability coverage, the minimum limit of liability being $300,000 per occurrence). The insurance certificate must name the U.S. Fish and Wildlife Service as additional insured, as well as specify that the service/activity authorized by the permit is covered by the policy and must also provide a telephone number for verification purposes.

- The permittee must provide a copy of the appropriate documentation of current First Aid and CPR (cardiopulmonary resuscitation) certification for all guides.

- The refuge needs public use figures for end-of-fiscal year reports; therefore, SUP use figures must be turned in to the refuge by August 1 with estimates through September 30, and the following information must be reported: total number of trips, total number participants, and total fees.

- We reserve the right to limit the number of commercial guides and clients as needed.

- A copy of a valid SUP must be available for inspection by any law enforcement officer or refuge staff member, on request, whenever an activity authorized by the permit is occurring. Storing in the glove box of the vehicle may be acceptable; however, all guides must be knowledgeable about the permit and its conditions.

- Violation of (1) any special conditions of the SUP or (2) any Federal, State, local, or refuge regulations may result in a Notice of Violation being issued or revocation/cancellation of the permit without written or verbal warning. In that case, the permittee would receive immediate notification via phone with follow-up notification via mail. Permittees are responsible for the actions of their employees, agents, others working under their SUP, and their clients.

- No refund would be made to the permittee, regardless of the reason for revocation/cancellation of a permit.

- Canoe/kayak tour permits: Guides would be required to be knowledgeable in the identification and threats of aquatic invasive plant species. They would be required to inspect boats, trailers, and all associated boating equipment for the presence of plant material. All plant material must be removed and securely placed in zip lock bags prior to launching the boat or using associated equipment in refuge waters.

- For those businesses having held a previous year SUP, a current year SUP would not be issued until an accounting of tours/activities conducted under the old SUP has been received by the refuge office.

- SUPs are issued on a year-to-year basis and are not automatically re-issued on consecutive years.

- Permittee would provide all participants with information explaining the refuge, Refuge System and their missions, as well as, relevant permit regulations and conditions. The refuge would supply the necessary information to the permittee.

- Vehicle(s) would be used only on designated roadways and in parking areas.

- Guides would police their clients for litter, vandalism, etc. and report any problems to the refuge office.

- The use of electronic calls or baiting for the purposes of attracting wildlife is not allowed.

- Pursuing wildlife for purposes other than regulated hunting activities involving the intended take of game species (e.g., pursuit for purposes of wildlife observation or photography) is not allowed.

- Commercial guiding can occur during the refuge's open hours from one-half hour before sunrise until one-half hour after sunset. The refuge must approve any requests for guiding outside of these hours.

JUSTIFICATION:

While few requests to offer commercial guiding have been received, it is possible that this niche, once available, will be filled by individuals and organizations with the skills necessary to provide quality fishing, hunting, and wildlife observation for guests. It is anticipated that even the minimal amount of economic activity represented by this use in those economically depressed areas within the Connecticut River watershed, will be welcomed by the local communities.

We have determined that allowing commercial guiding would not materially interfere with, or detract from, the mission of the Refuge System or the purposes for which the refuge was established. In fact, based on the analysis presented above, we have determined that allowing this use will contribute to the refuge's purpose, "[to] provide opportunities for…fish and wildlife oriented recreation and access to the extent compatible with the other purposes..." First, refuge visitors enjoy participating in wildlife-dependent priority public uses, but many may not have the knowledge, skills, or equipment to engage in these activities, particularly at the more remote divisions. Commercial guides may help facilitate a safe and high-quality priority public use experience, and facilitate observation and appreciation by participants of the refuge's wildlife, habitats, and conservation programs. Second, by allowing this activity, refuge staff hopes more visitors will be exposed to the refuge and the Refuge System, and this exposure may lead to a better understanding of the importance of the Refuge System to wildlife conservation and to the American people. These users may take the time to learn more about the refuge and become supporters of the Refuge System.

SIGNATURE:

Refuge Manager: _____ _____
(Signature) (Date)

CONCURRENCE:

Regional Chief: _____ _____
(Signature) (Date)

MANDATORY 10-YEAR RE-EVALUATION DATE:

_____

LITERATURE CITED:

Belanger, L. and J. Bedard. 1990. Energetic cost of man-induced disturbance to staging snow geese. Journal of Wildlife Management 54:36-41.

Burger, J. 1981. The effect of human activity on birds at a coastal bay. Biological Conservation.

Cole, D.N., and P.B. Landres. 1995. Indirect effect of recreation on wildlife in Knight, R.L, and K.J. Gutzwiller, eds. 1995. Wildlife and Recreationists—Coexistence Through Management and Research. Washington, DC. Island Press.

Hammitt, W.E., and D.N. Cole. 1998. Wildland Recreation. John Wiley & Sons, New York, NY. 361 pp.

Havera, S.P., L.R. Boens, M.M. Georgi, and R.T. Shealy. 1992. Human disturbance of waterfowl on Keokuk Pool, Mississippi River. Wildlife Society Bulletin 20:290-298.

Henson, P.T., and A. Grant. 1991. The effects of human disturbance on trumpeter swan breeding behavior. Wildlife Society Bulletin 19:248-257.

Kaiser, M.S., and E.K. Fritzell. 1984. Effects of river recreationists on green-backed heron behavior. Journal of Wildlife Management 48:561-567.

Kahl, R. 1991. Boating disturbance of canvasbacks during migration at Lake Poygan, Wisconsin. Wildlife Society Bulletin 19:242-248.

Klein, M.L. 1993. Waterbird behavioral responses to human disturbance. Wildlife Society Bulletin 21:31-39.

Knight, R.L., and D.N. Cole. 1991. Effects of recreational activity on wildlife in wildlands. Trans. 56th National Association of Wildlife and Natural Resources Conference. Pp. 238-247.

Korschen, C.E., L.S. George, and W.L. Green. 1985. Disturbance of diving ducks by boaters on a migrational staging area. Wildlife Society Bulletin 13:290-296.

Kuss. F. 1986. A review of major factors influencing plant responses to recreation impacts. Environmental Management. 10:638-650.

Morton, J.M., A.C. Fowler, and R.L. Kirkpatrick. 1989. Time and energy budgets of American black ducks in winter. Journal of Wildlife Management 53:401-410 (also see corrigendum in Journal of Wildlife Management 54:683).

Ward, D.H., and R.A. Stehn. 1989. Response of brant and other geese to aircraft disturbance at Izembek Lagoon, Alaska. U.S. Fish and Wildlife Service, Alaska Fish and Wildlife Research Center. Final report to the Minerals Management Service. Anchorage, Alaska. 193 pp.

Whittaker, D., and R.L. Knight. 1998. Understanding wildlife responses to humans. Wildlife Society Bulletin 26:312–317.

Williams, G.J., and E. Forbes. 1980. The habitat and dietary preferences of dark-bellied brant geese and widgeon in relation to agricultural management. Wildfowl 31:151-157.

FWS Form 3-2319
02/06

FINDING OF APPROPRIATENESS OF A REFUGE USE

Refuge Name: Silvio O. Conte National Fish and Wildlife Refuge

Use: Commercial Haying to Manage Grassland Habitat

This form is not required for wildlife-dependent recreational uses, take regulated by the State, or uses already described in a refuge CCP or step-down management plan approved after October 9, 1997.

Decision Criteria:	**YES**	**NO**
(a) Do we have jurisdiction over the use?	✔	
(b) Does the use comply with applicable laws and regulations (Federal, State, Tribal, and local)?	✔	
(c) Is the use consistent with applicable Executive orders and Department and Service policies?	✔	
(d) Is the use consistent with public safety?	✔	
(e) Is the use consistent with goals and objectives in an approved management plan or other document?	✔	
(f) Has an earlier documented analysis not denied the use or is this the first time the use has been proposed?	✔	
(g) Is the use manageable within available budget and staff?	✔	
(h) Will this be manageable in the future within existing resources?	✔	
(i) Does the use contribute to the public's understanding and appreciation of the refuge's natural or cultural resources, or is the use beneficial to the refuge's natural or cultural resources?	✔	
(j) Can the use be accommodated without impairing existing wildlife-dependent recreational uses or reducing the potential to provide quality (see section 1.6D, 603 FW 1, for description), compatible, wildlife-dependent recreation into the future?	✔	

Where we do not have jurisdiction over the use ["no" to (a)], there is no need to evaluate it further as we cannot control the use. Uses that are illegal, inconsistent with existing policy, or unsafe ["no" to (b), (c), or (d)] may not be found appropriate. If the answer is "no" to any of the other questions above, we will generally not allow the use.

If indicated, the refuge manager has consulted with State fish and wildlife agencies. Yes___✔___No _____.

When the refuge manager finds the use appropriate based on sound professional judgment, the refuge manager must justify the use in writing on an attached sheet and obtain the refuge supervisor's concurrence.

Based on an overall assessment of these factors, my summary conclusion is that the proposed use is:

Not Appropriate _____ **Appropriate** ___✔___

Refuge Manager: _____ Date: _____

If found to be **Not Appropriate**, the refuge supervisor does not need to sign concurrence if the use is a new use.

If an existing use is found **Not Appropriate** outside the CCP process, the refuge supervisor must sign concurrence.

If found to be **Appropriate**, the refuge supervisor must sign concurrence:

Refuge Supervisor: _____ Date: _____

A compatibility determination is required before the use may be allowed.

603 FW 1
Exhibit 1
Page 2

JUSTIFICATION FOR A FINDING OF APPROPRIATENESS OF A REFUGE USE

Refuge Name: Silvio O. Conte National Fish and Wildlife Refuge

Use: Commercial Haying to Manage Grassland Habitat

NARRATIVE:

Commercial haying at Silvio O. Conte National Wildlife Refuge (Conte Refuge, refuge) would be permitted in designated grassland management areas of the refuge. At this time the only areas managed with commercial haying are on the Fort River Division in Hadley, Massachusetts.

Commercial haying is considered to be an economic use under 50 CFR 29.1. Therefore, it must contribute to the purposes for which the refuge was established or the mission of the National Wildlife Refuge System (Refuge System). Haying cuts vegetation (primarily grass) from fields which otherwise continue to grow then become dormant following the growing season. Through time in the absence of mowing these fields would eventually succeed to shrub and forest habitats, at the expense of grassland habitats. Unlike nearby haying on commercial farmland, haying on the refuge would be conducted under a special use permit, which requires hay not to be harvested until after July 15. This allows ground-nesting, grassland-dependent birds to raise their broods and not lose their chicks to the harvesting machines. In addition, there are approximately 50 acres managed as herbaceous habitat (i.e. grass/forb) that are mowed by refuge staff to retain this habitat structure; however, these fields are mowed on a rotational basis, leaving a portion unmowed each year for nonbreeding season habitat.

Haying contributes to goal 1 of the refuge's draft Comprehensive Conservation Plan (CCP) and Environmental Impact Statement (EIS), which states that the refuge will provide and promote through active management a diversity of successional habitats, including grasslands, to sustain priority species. Additionally, haying by a local farmer frees up staff equipment operators to conduct required management activities elsewhere on the refuge. This saves the refuge time and money which may be allocated to different projects. In that sense, this use also benefits the refuge's other natural and cultural resources.

Haying facilitates the management of refuge grassland habitat and is not only a reasonable method, but sometimes is a preferred method of managing grasslands for nesting bird species. For these reasons, we have found commercial haying contributes to the purposes for which the refuge was established and the mission of the Refuge System and, therefore, is an appropriate refuge use under the U.S. Fish and Wildlife Service's policy on the appropriateness of refuge uses (603 FW 1).

This finding of appropriateness and the compatibility determination for this use was distributed for public comment for 90 days from August 18, 2015 to November 16, 2015 as part of the review of the Silvio O. Conte Refuge's draft CCP/EIS. Comments we received on this use were considered as we developed this final determination. A summary of comments received on the draft plan is included in appendix O of the final CCP/EIS. This finding will undergo another 30-day review with release of the final CCP/EIS.

COMPATIBILITY DETERMINATION

USE:

Commercial Haying to Manage Grassland Habitat

REFUGE NAME:

Silvio O. Conte National Fish and Wildlife Refuge (Conte Refuge)

DATE ESTABLISHED:

October 3, 1997

ESTABLISHING AND ACQUISITION AUTHORITY(IES):

- Silvio O. Conte National Fish and Wildlife Refuge Act (Public Law 102-212).
- Migratory Bird Conservation Act of 1929.
- Land and Water Conservation Fund Act of 1965.

REFUGE PURPOSE(S):

- To conserve, protect, and enhance the Connecticut River populations of Atlantic salmon, American shad, river herring, shortnose sturgeon, bald eagles, peregrine falcons, osprey, black ducks, and other native species of plants, fish, and wildlife.
- To conserve, protect, and enhance the natural diversity and abundance of plant, fish and wildlife species and the ecosystem upon which these species depend within the refuge.
- To protect species, listed as endangered or threatened, or identified as candidates for listing, pursuant to the Endangered Species Act of 1973 (ESA) as amended (16 U.S. 1531 et seq.).
- To restore and maintain the chemical, physical, and biological integrity of wetland and other waters within the refuge.
- To fulfill the international treaty obligations of the United States relating to fish and wildlife and wetlands.
- To provide opportunities for scientific research, environmental education, and fish and wildlife oriented recreation and access to the extent compatible with the other purposes stated in this section.

NATIONAL WILDLIFE REFUGE SYSTEM MISSION:

To administer a national network of lands and waters for the conservation, management, and where appropriate, restoration of the fish, wildlife, and plant resources and their habitats within the United States for the benefit of present and future generations of Americans.

DESCRIPTION OF USE:

(a) What is the use? Is the use a priority public use?
The use is commercial haying to manage grassland habitat at Conte Refuge. Haying is a refuge management economic activity under 50 CFR 29.1, not a priority public use of the National Wildlife Refuge System (Refuge System) under the National Wildlife Refuge System Administration Act of 1966 (16 U.S.C. 668dd-668ee), and the National Wildlife Refuge System Improvement Act of 1997 (Public Law 105-57). Since commercial haying is considered an economic use, it must contribute to the purposes for which the refuge was established or the mission of the Refuge System.

(b) Where would the use be conducted?
Haying would continue on up to 103 acres of grass fields within the Fort River Division of the refuge. Currently, 59 acres are commercially hayed and another 44 acres are cut by refuge staff because the composition of these meadows has low forage value. This division includes 249 acres of mostly meadows and floodplain forest. Under the preferred alternative, the Fort River Division could expand to 2,277 acres which could include additional meadow habitat that could be hayed consistent with the ongoing program. Each of the Conservation Focus Areas (CFAs) and expanded divisions in the preferred alternative contain pasture, hay, or grassland that could be commercially hayed if its retention is called for in the Habitat Management Plan (HMP) and the vegetation is suitable forage. A map of the acreage to be hayed during a given year would be appended to the annual special use permit(s) (SUPs) which would be issued for this use.

(c) When would the use be conducted?
Refuge permittees would be able to access refuge hay fields from April through September 30, as needed for the haying operation. Access would be for the purposes of soil testing, application of soil amendments, planting, crop monitoring, and harvesting.

The use of a tractor to spread soil amendments and for hay harvest must occur after July 15 each year, to ensure that grassland bird species have completed nesting. Harvesting and equipment removal must be completed by September 30 each year.

(d) How would the use be conducted?
Individuals would be authorized to cut hay once, after July 15, via a SUP issued by the refuge manager. Currently, 71 acres of refuge grasslands are hayed every year to maintain healthy, vigorous habitat for grassland birds and other associated species. Another 44 acres (Fort River Division) (map D.2) and 11 acres (Pondicherry Division) (map D.3) are mowed by refuge staff on a 2- to 3-year rotation. The meadows at the Fort River Division are not currently suitable as forage because of a high volume of unpalatable plants. An additional 20 acres at this division are being restored to warm season grassland habitat and 30 acres of grass/forb fields are not high quality hay. These 50 acres are not included in the commercial haying program and are mowed by refuge staff. Some of these fields are left unmowed each year to provide non-breeding season habitat. The goal is to make all the grasslands at the Fort River Division (123 acres) and Pondicherry Division (11 acres) available for commercial mowing, once high quality grass forage is firmly established. Each of the other divisions and the proposed acquisitions in the CFAs contain pasture, hay, or grassland that could be mowed commercially, if acquired by the U.S. Fish and Wildlife Service (Service). The amount of haying each year would be adjusted as needed to ensure optimum maintenance of habitat for wildlife. Residual ground cover would be allowed to grow during the fall season to provide nesting habitat for waterfowl and neo-tropical migrants the next spring.

All activities under this special use permit process are regulated by provisions listed in 50 CFR (subpart D-Permits, 25.41–45). The permittee would be required to comply with all Department of the Interior, U.S. Fish and Wildlife Service, and Federal, State, and local laws in the conduct of their business. Because this is an economic use of the refuge, it is also subject to other applicable laws and regulations (see 50 CFR 29.1). We would continue to follow the procedures outlined in the Service's Refuge Manual (5 RM 17.11) and other applicable laws and regulations (see also 50 CFR 29.1) when selecting permittees and administering this use. To reduce costs of administering this use and consistency from year to year, we may follow procedures specified in this section of the Refuge Manual which allow a previous permittee to have priority over other applicants for renewal of any privilege so long as there has been compliance with the provisions of the previous special use permit.

All labor, equipment, and materials for the haying operation would be supplied by the permittee. This consists of tractors, hay wagons, soil amendments, and equipment used for spreading soil amendments. No refuge-supplied facilities or improvements are required.

Native seed adapted to the region will be used. Overseeding is not anticipated at the Fort River Division, but should it be necessary there or elsewhere, the species would need to be approved by the refuge manager and could not contain any genetically modified materials or neonectoid treated seeds, as specified by Service policy. Permittee may access hay fields for soil testing, application of soil amendments, planting, monitoring, and hay harvesting, although several of these activities may only be permitted after July 15.

Administration of the haying program would be conducted in accordance with the forthcoming refuge HMP. Haying would be subject to the terms and conditions of an annual SUP issued by the refuge manager. The terms of this permit would ensure compatibility through application and implementation of Service policy and refuge-specific stipulations.

Map D.2. Mowed and hayed fields at the Fort River Division of the Silvio O. Conte National Fish and Wildlife Refuge.

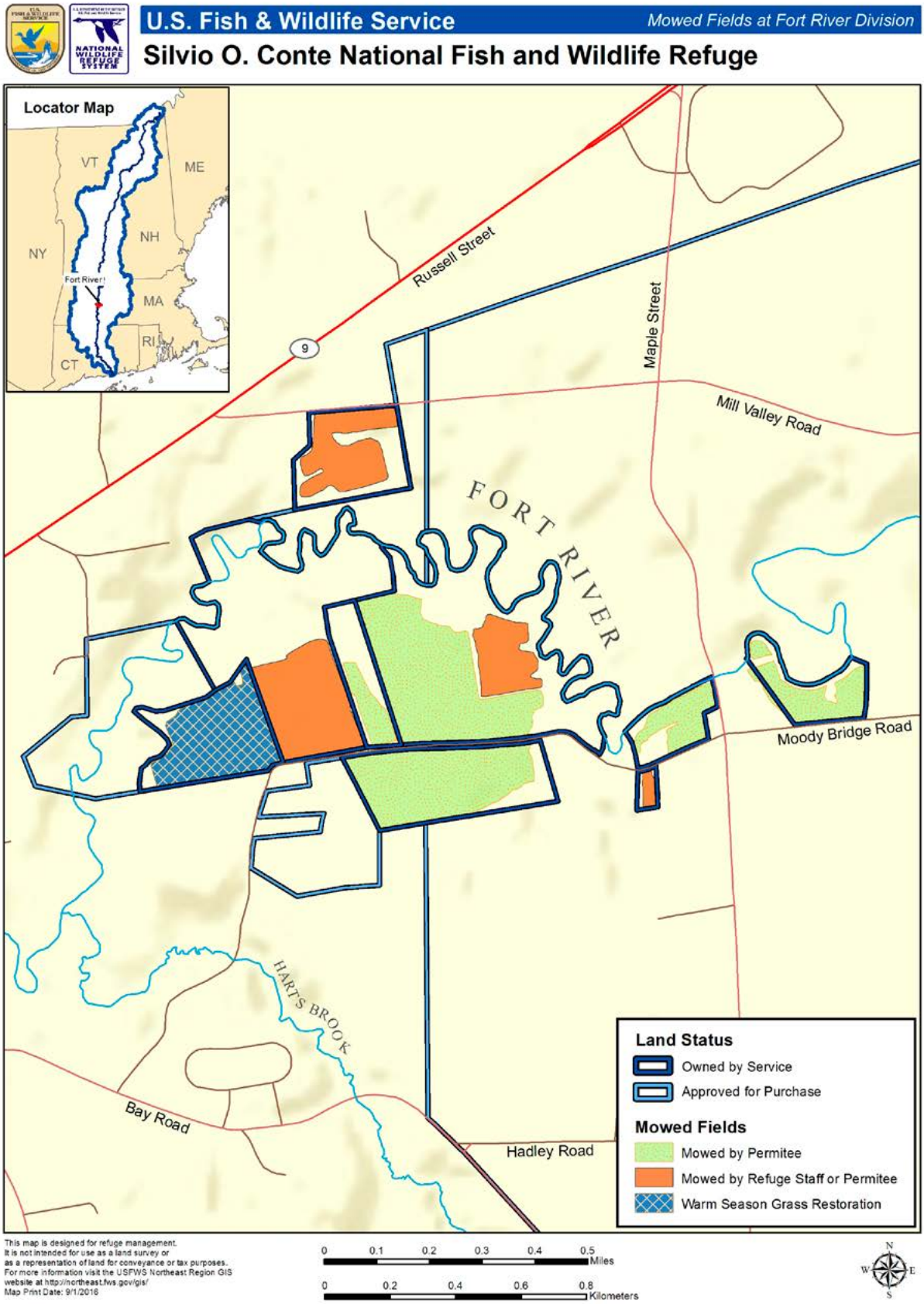

Map D.3. Mowed Fields at the Pondicherry Division of the Silvio O. Conte National Fish and Wildlife Refuge.

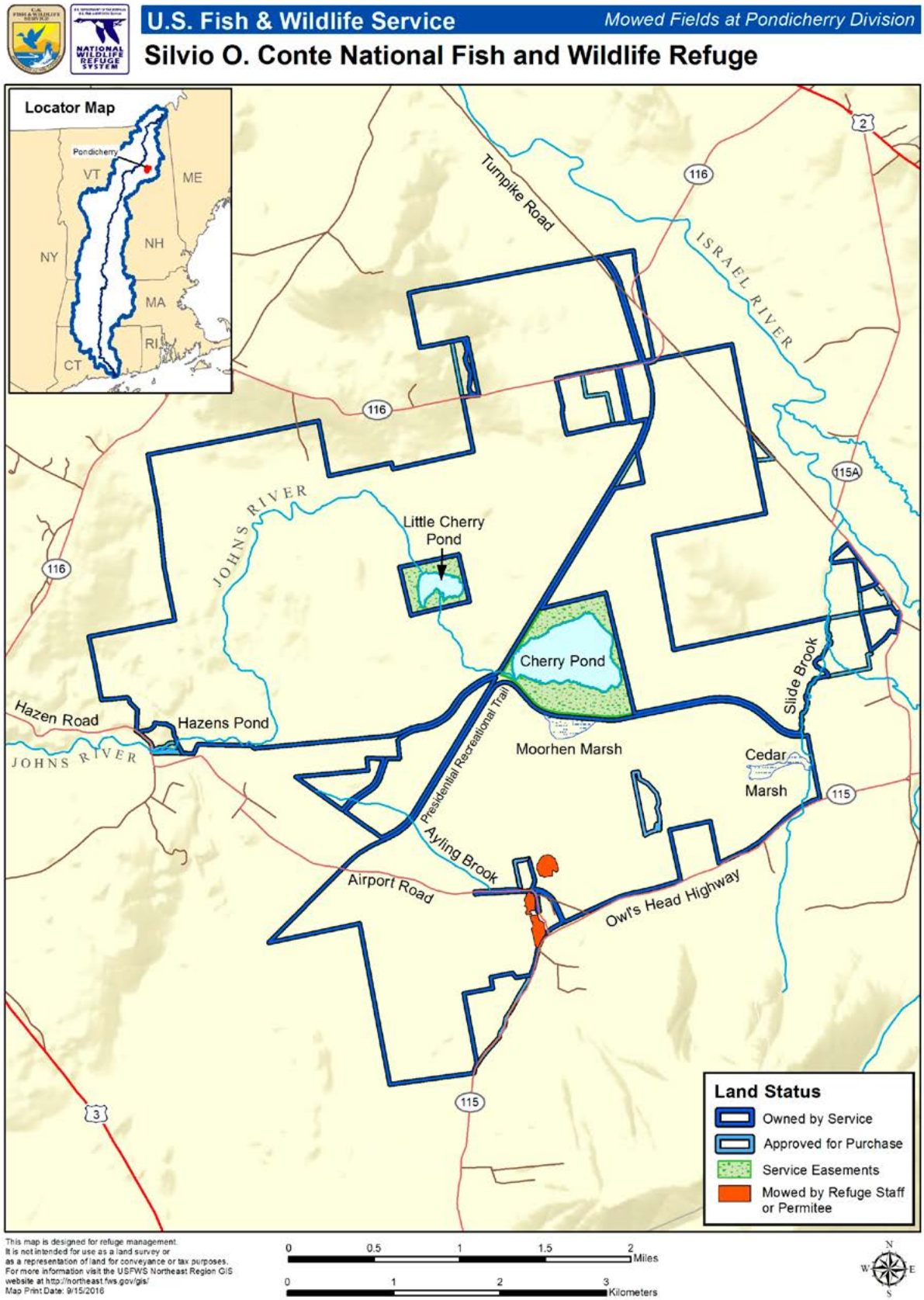

(e) Why is this use being proposed?
In part, the Conte Refuge was established to conserve, protect, and enhance the natural diversity and abundance of plant, fish, and wildlife species and the ecosystem upon which these species depend within the refuge. Division-specific pasture/hay/grassland direction is found in the draft Comprehensive Conservation Plan (CCP), Part II Sub-objective 1.2b.

Fort River Division: Sub-objective 1.2b states that the refuge will manage abandoned agricultural fields, where appropriate, to provide forest connectivity, scrub-shrub and grassland habitat for breeding grassland species (e.g., upland sandpipers), migrating landbirds, and bat species.

Pondicherry Division: Sub-objective 1.2b states that the refuge will manage pasture, hay, and grasslands (where appropriate) to create a mosaic of habitat conditions required by American woodcock.

We would continue to maintain 103 acres of grassland habitat at the Fort River Division and 11 acres at the Pondicherry Division to provide nesting and migratory habitat for landbirds of high conservation priority in such as bobolinks and American woodcock (Partners in Flight [PIF] Area 27 Plan). Currently, 59 acres is commercially hayed at the Fort River Division. The remaining acres with low forage values at both divisions are mowed by refuge staff. We would strive to employ commercial cutting of pasture, hay, and grasslands wherever the vegetation is suitable for forage.

Haying and mowing are useful grassland management techniques (USFWS 1982). Mitchell et al. (2000) stated that mowing is an economical means of controlling invasion of grasslands by forbs and woody plants. Further, mowing may be a more convenient technique to apply than prescribed fire or grazing. Herkert et al. (1993) recommend rotational haying or mowing as a grassland management alternative with subunits left idle. This strategy provides a complex of grassland successional stages to meet the respective nesting requirements of several grassland bird species. More specifically, haying and mowing are recommended techniques for managing grasslands used by nesting northern harrier (Berkey et al. 1993, Dechant et al. 2001b), upland sandpiper (Kirsch and Higgins 1976, Dechant et al. 2001a), grasshopper sparrow (Dechant et al. 2001c, Vickery 1996), savannah sparrow (Swanson 2001), bobolink (Bollinger and Gavin 1992, Dechant et al. 2001d), American woodcock (U.S. Department of Agriculture, Natural Resources Conservation Service 2010), and eastern meadowlark (Lanyon 1995, Hull 2000). All of these species currently use, or were historically documented on, the Fort River and/or Pondicherry Divisions of Conte Refuge, at least during migration. These species could also be expected on the pasture, hay, and grassland habitats of additional acquisition priorities identified in the preferred alternative.

Historically most of New England was forested, except for a period following European settlement when much of the region was cleared for agriculture and subsequently grasslands and fields became abundant. In pre-settlement times, permanent, large openings were uncommon. Scattered openings occurred along large river floodplains, around beaver flowages, in coastal heathlands and in other areas of regular disturbance. In undeveloped areas, large grasslands are now in decline and often has reforested.

Populations of grassland birds are declining as grassland habitats and other agricultural conditions diminish. Grassland birds have declined more consistently and over a wider geographic area than any other group of North American birds over the last 30 years (Robbins et al. 1986, Askins 1993, Knopf 1995, Askins 1997, Sauer et al. 1997). As a result, most grassland birds appear on lists of rare and declining species (NYSDEC 1997, Pashley et al. 2000, U.S. NABCI Committee 2000, USFWS 2002). Norment (2002) notes that despite the relatively recent (last 200 years) rise and fall of grassland habitats and associated birds in New England, the region may still be important for these species given their continental decline and habitat loss in the core of their ranges in the Midwest.

Large grasslands are declining across the Northeast as a result of forest succession and development. Many remaining fields are mowed twice a year (late spring and mid-summer) for hay, and hence, are less suitable for nesting birds. Although there is uncertainty about the extent of grassland habitat and associated wildlife prior to European settlement, grasslands provide a component of diversity that is desired (Jones and Vickery 1997).

American woodcock, which depend on old fields and clearings for courtship displays in the spring, are declining at a rate of 2 to 3 percent per year. The major causes for these declines are thought to be loss and

degradation of habitat on the breeding and wintering grounds, resulting from forest succession and land use changes (Kelley 2003). Bobolinks also rely on open field habitat for nesting and foraging and are also declining (approximately 3 percent per year) in this region.

In addition to providing breeding habitat, the fields provide important foraging habitat for spring and fall migrating birds such as the bobolink. Most migratory birds rely on seeds, fruits, and insects to sustain them through migration. While difficult to quantify, the foraging habitat provided during migration is considered a vital component of the overall habitat quality.

Grassland management requires disturbance (e.g., mowing) to prevent natural succession to shrubland and forest. Most of the grassland bird species (e.g., grasshopper, vesper, and savannah sparrows, upland sandpiper, and eastern meadowlark) that have declined in the region require 20 acres or more of contiguous grassland habitat (Jones and Vickery 1997). Only the bobolink occupies areas less than 10 acres, although a viable population would require a larger grassland area. Small grasslands surrounded by forest or shrubland and isolated from each other are unlikely to provide quality nesting and feeding habitat for these birds (Askins 1997). Without active management, refuge grasslands would succeed to shrub and forest habitat and be susceptible to nonnative invasive species including purple loosestrife, multiflora rose, reed canary grass, and Japanese knotweed.

AVAILABLITY OF RESOURCES:

This activity is a refuge management economic activity conducted for the Service by a citizen through the use of a SUP, and therefore, is not subject to the Refuge Recreation Act.

For purposes of documentation, the costs associated with this use are minimal and include the cost of preparing a permit annually, communicating habitat management goals to the permittee annually, and monitoring the activity.

We estimate these costs associated with this use:

Law enforcement–patrol/visitor-resource protection/public use monitoring/enforcement/outreach (GS-9 Refuge Officer):	$1,000
Resource impacts/monitoring (GS-11 Wildlife Biologist):	$1,000
Total:	**$2,000**

ANTICIPATED IMPACTS OF THE USE:

Effects on Wildlife:

Haying on the Fort River Division of the Conte Refuge is used as an inexpensive management tool to maintain habitat for grassland-nesting birds, and for woodcock singing grounds and nocturnal roosting fields (Sepik et al. 1981) as well as providing habitat for other wildlife species such as geese, deer, and bears. At the time of refuge establishment, sedge wrens, which are a State-listed endangered species, nested on the property. Traditional habitat management activities, including haying, have been continued to ensure no significant habitat changes that could threaten use by sedge wrens. Haying has continued to make the habitat attractive to other species of importance such as bobolinks, American kestrels, and red-tailed hawks.

Haying by private parties would result in short-term disturbances and long-term benefits to both resident and migratory wildlife using the refuge. Short-term impacts would include disturbance and displacement of some wildlife by equipment operation. Haying activities would also result in short-term loss of habitat for species using those areas for nesting, feeding, or resting. This would be partially mitigated by limiting all cutting and haying until after July 15, when bobolinks, savannah sparrows, and most other grassland-nesting birds have fledged at least one brood.

Other short-term impacts would be noise and exhaust fumes generated by the tractors and associated farm equipment; however this would not be a significant impact. The resulting habitat would improve conditions for most of the species adversely affected by the short-term negative impacts (e.g. upland sandpiper, grasshopper sparrow, savannah sparrow and bobolink).

The American woodcock requires open areas for its spring courtship. Large fields, such as those at the Fort River Division, are used by woodcock as nocturnal roosting areas during the summer months. The American woodcock is a high priority species under both the PIF and Bird Conservation Region (BCR) 30 programs.

The lush regrowth that appears after a field is hayed provides green browse for white-tailed deer and other wildlife.

Effects on Habitat:

Machinery and people can be vectors for invasive plants when seeds or other propagules are moved from one area to another. Once established, invasive plants can outcompete native plants, thereby, altering habitats and indirectly impacting wildlife. The threat of invasive plant establishment would always be an issue requiring annual monitoring, and when necessary, treatment. However, risks of introducing invasive plants via moving haying equipment from one hay field to another are thought to be minimal because there is usually little exposed soil in the fields to get stuck in the tires. Staff would work to eradicate any invasive species and educate the visiting public and permittee on ways to identify invasive species and methods to minimize the risk of spreading invasive species.

Overall, a controlled haying program would have long-term positive impacts to the refuge's grassland habitat. Haying suppresses invasion of grasslands by perennial forbs and shrubs. Consequently, grass-dominated plant communities are maintained. Diverse grasslands provide habitat for a greater diversity and abundance of grassland birds and other wildlife.

Effects on Water Quality:

The farmer is allowed to test the soil for fertility and add amendments. Over-fertilizing, fertilizing at the wrong time of year, or applying fertilizer too close to a water body can have negative impacts on water quality. Excess nitrogen and phosphorus, entering a body either overland or through the groundwater, can increase the nutrient levels in the water body. Fertilizer in a water body results in increased plant growth just as on the farm field, only in this case growth of phytoplankton, algae, and macrophytes. Dying plant material can take up a great deal of dissolved oxygen, leading to anoxic conditions and possibly to fish kills. To protect water quality on and around the refuge unit, we would impose the following stipulations as part of the SUP: (1) the permitee would be required to submit results of the soil test and plans for any amendment application to the refuge manager for approval prior to any application, and (2) permittee may not apply any soil amendments (fertilizers) on frozen ground or within a buffer zone of 100-feet of a water body.

Socioeconomic Effects:

The haying program would also have positive economic impacts for the permittees, and would result in hay being available to local farmers and construction contractors.

PUBLIC REVIEW AND COMMENT:

A finding of appropriateness and this compatibility determination were distributed for public comment for 90 days from August 18, 2015 to November 16, 2015 as part of the review of the Silvio O. Conte Refuge's draft CCP/EIS. Comments we received on this use were considered as we developed this final determination. This determination will undergo another 30-day review with release of the final CCP/EIS. A summary of comments received on the draft plan is included in appendix O of the final CCP/EIS.

DETERMINATION (CHECK ONE BELOW):

____ Use is not compatible

__X__ Use is compatible, with the following stipulations

STIPULATIONS NECESSARY TO ENSURE COMPATIBILITY:

On refuge lands:

- Commercial haying will be done under a SUP in accordance with 5 RM 17. Permittees will be selected according to 5 RM 17.11 (A).
- Permittees must abide by the conditions and stipulations stated in the SUP. SUPs include stipulations on the timing, frequency, and pattern of haying to best meet wildlife habitat objectives each year.
- The permittee will use every feasible precaution against causing excessive surface damage to Refuge lands, roads, wetlands, and waters. Permittee will report any damages to the refuge manager as soon as possible.
- The permittee shall take all reasonable precautions to prevent the escape of fires and to suppress fires and shall render all reasonable assistance in the suppression of refuge fires.
- Permittee will not conduct activities in connection with SUPs in any such manner that would interfere with or cause hazards to Refuge staff or other parties authorized to enter the property.
- Refuge staff must continue to monitor the refuge for the presence of threatened or endangered species and ensure that haying continues to produce the desired habitat conditions which are beneficial to wildlife.
- Refuge permittees may access refuge hay fields from April through September, as needed for the haying operation for the purposes of soil testing, and crop monitoring. Tractor, machinery, and vehicle access for the application of soil amendments, planting native species, and harvesting, will take place between July 15 and April 1.
- No soil amendments (fertilizers) will be applied on frozen ground or within a buffer zone of 100 feet of a water body.
- Permitees must have written approval from the refuge manager before applying any pesticide (including herbicides). The type, timing, and application rate will be based on a Service-approved pesticide use plan obtained by the refuge manager. To provide enough time to complete the Service's pesticide use approval process, permittees would need to submit the following to the refuge manager at least 3 months prior to the desired application date:

  * The pesticide label containing the common name of the pesticide and application.
  * Recommended number of applications.
  * Application methods.
  * Target pests.
  * If the pesticide use is approved, the permittee is required to complete a pesticide spray record at the time of application. The pesticide spray record would be supplied by the refuge manager
- Grass harvest must occur after July 15 each year, to ensure that grassland bird species have completed nesting. Harvesting and equipment removal must be completed by September 30, which is the ending date of the annual SUP issued for this refuge use.
- Haying locations may be adjusted annually or cancelled in any given year or series of years in the interest of optimizing habitat conditions for wildlife.

- Any seed used will be native and adapted to the region, and will not contain any genetically modified materials or neonectoid treatments.

JUSTIFICATION:

We have determined that allowing commercial haying on Conte Refuge would not materially interfere with, or detract from, the mission of the Refuge System or the purposes for which the refuge was established. In fact, based on the analysis presented above, we have determined that allowing this use will contribute to the mission of the Refuge System and the purposes for which the refuge was established as follows. Haying contributes to the refuge's wildlife purposes by maintaining habitat in a condition suitable for use by wildlife, primarily obligate grassland nesting birds. Fields not mowed provide habitat from late summer through early spring. Raptors benefit from the area by using it extensively to hunt for small mammals. Small and large mammals use the fields for foraging and to raise their young. On some fields with low forage values mowing will be conducted by refuge staff and therefore, not be subject to a compatibility determination. However, where feasible, it is more efficient and cost effective to issue an annual special use permit to harvest hay.

SIGNATURE:

Refuge Manager: _____ _____
(Signature) (Date)

CONCURRENCE:

Regional Chief: _____ _____
(Signature) (Date)

MANDATORY 10-YEAR RE-EVALUATION DATE:

_____

LITERATURE CITED:

Askins, R.A. 1993. Population trends in grassland, shrubland, and forest birds in Eastern North America, p. 1-34. Pages 1-34 *in:* D. M. Power ed., Current ornithology, vol. 11. Plenum Pree, New York.

____. 1997. History of grasslands in the northeastern United States: implications for conservation. Pages 119-136 *in:* P.D. Vickery and P.W. Dunwiddie, eds., Grasslands of northeastern North America, ecology and conservation of native and agricultural landscapes. Massachusetts Audubon Society, Lincoln, Massachusetts, USA.

Atkeson, T.Z., and Givens, L.S. 1953. The use of hay crops in southeastern waterfowl management. Journal of Wildlife Management.

Baker, J.A., and R.J. Brooks. 1981. Raptor and vole populations at an airport. Journal of Wildlife Management.

Berkey, G., R. Crawford, S. Galipeau, D. Johnson, D. Lambeth, and R. Kreil. 1993. A review of wildlife management practices in North Dakota: effects on nongame bird populations and habitats. Report submitted to Region 6, U.S. Fish and Wildlife Service, Denver, Colorado.

Bollinger, E.K., P.B. Bollinger, and T.A. Gavin. 1990. Effects of hay-cropping on eastern populations of the bobolink. Wildlife Society Bulletin.

Bollinger, E.K., and Gavin, T.A. 1992. Eastern bobolink populations: ecology and conservation in an agricultural landscape. *In:* Hagan, J.M., D.W. Johnston, eds., Ecology and conservation of neotropical migrant landbirds.

Dechant, J.A., M.F. Dinkins, D.H. Johnson, L.D. Igl, C.M. Goldade, B.D. Parkin, and B.R. Euliss. 2001a. Effects of management practices on grassland birds: upland sandpiper. Northern Prairie Wildlife Research Center, Jamestown, North Dakota. Northern Prairie Wildlife Research Center Home Page. *http://www.npwrc.usgs.gov/resource/literatr/grasbird/upsa/upsa.htm* (Accessed February 2000).

____. 2001b. Effects of management practices on grassland birds: northern harrier. Northern Prairie Wildlife Research Center, Jamestown, North Dakota. Northern Prairie Wildlife Research Center Home Page. *http://www.npwrc.usgs.gov/resource/literatr/grasbird/harrier/harrier.htm* (Accessed February 2000).

____. 2001c. Effects of management practices on grassland birds: grasshopper sparrow. Northern Prairie Wildlife Research Center, Jamestown, North Dakota. Northern Prairie Wildlife Research Center Home Page. *http://www.npwrc.usgs.gov/resource/literatr/grasbird/grasshop/grasshop.htm* (February 2000).

____. 2001d. Effects of management practices on grassland birds: bobolink. Northern Prairie Wildlife Research Center, Jamestown, North Dakota. Northern Prairie Wildlife Research Center Home Page. *http://www.npwrc.usgs.gov/resource/literatr/grasbird/bobo/bobo.htm* (Accessed February 2000).

George, R.R., A.L. Farris, C.C. Schwartz, D.D. Humburg, J.C. Coffey. 1979. Native prairie grass pastures as nest cover for upland birds. Wildlife Society Bulletin.

Herkert, J.R, R.E. Szafoni, V.M. Kleen, and J.E. Schwegman. 1993. Habitat establishment, enhancement and management for forest and grassland birds in Illinois. Natural Heritage Technical publication #1, Illinois Department of Conservation, pp. 1–20. Northern Prairie Wildlife Research Center Online. *http://www.npwrc.usgs.gov/resource/birds/manbook/index.htm* (Accessed December 2012)

Hirst, S.M., and C.A. Easthope. 1981. Use of agricultural lands by waterfowl in southwestern British Columbia. Journal of Wildlife Management.

Hull, S.D. 2000. Effects of management practices on grassland birds: eastern meadowlark. Northern Prairie Wildlife Research Center, Jamestown, North Dakota.

Hurley, R.J., and E.C. Franks. 1976. Changes in the breeding ranges of two grassland birds. Auk.

Jarvis, R.L. and S.W. Harris. 1971. Land-use patterns and duck production at Malheur National Wildlife Refuge. Journal of Wildlife Management. 1971.

Jones, A.L. and P.D. Vickery. 1997. Conserving grassland birds. Massachusetts Audubon Society, Lincoln, Massachusetts.

Kelley, J.R., Jr. 2003. American woodcock population status. 2003. U.S. Fish and Wildlife Service, Laurel, Maryland.

Kirby, R.E., J.K. Ringelman, D.R. Anderson, R.S. Sojda. 1992. Grazing on national wildlife refuges: do the needs outweigh the problems? Transactions of the 57th North American Wildlife and Natural Resources Conference. Wildlife Management Institute, Washington, DC.

Kisch, L.M. and K.F. Higgins. 1976. Upland sandpiper nesting and management in North Dakota. Wildlife Society Bulletin 4:16-20

Knopf, F.L. 1995. Declining grassland birds. Pages 296-298 *in:* E.T. LaRoe, G.S. Farris, C.E. Puckett, P.D. Doran, and M.J. Mac, editors. Our living resources: a report to the nation on the distribution, abundance, and health of U.S. plants, animals, and ecosystems. U.S. National Biological Service, Washington, DC.

Kotler, B.P., M.S. Gaines, B.J. Danielson. 1988. The effects of vegetative cover on the community structure of prairie rodents. Acta Theriologica.

Labisky, R.F. 1957. Relation of hay harvesting system to duck nesting under a refuge-permittee system. Journal Wildlife Management.

Lanyon, W.E. 1995. Eastern meadowlark (*Sturnella magna*). *In:* A. Poole and F. Gill, eds., The Birds of North America. The Academy of Natural Sciences, Philadelphia, Pennsylvania, and The American Ornithologists Union, Washington, DC.

Mitchell, L.R., C.R. Smith, and R.A. Malecki. 2000. Ecology of grassland breeding birds in the Northeastern United States - a literature review with recommendations for management. U.S. Geological Survey, Biological Resources Division and New York Cooperative Fish and Wildlife Research Unit, Department of Natural Resources, Cornell University, Ithaca, New York.

Moen, A.N. 1983. Agriculture and wildlife management.

Murphy, R.K. 1993. History, nesting biology, and predation ecology of raptors in the Missouri Coteau of northwestern North Dakota.

New York State Department of Environmental Conservation. 1997. Endangered, threatened and special concern fish and wildlife species of New York State. New York State Department of Environmental Conservation, Division of Fish, Wildlife and Marine Resources, Delmar, New York.

Norment, C. 2002. On grassland bird conservation in the Northeast. The Auk 119:271-279.

Pashley, D.N., C.J. Beardmore, J.A. Fitzgerald, R.P. Ford, W.C. Hunter, M.S. Morrison, K.V. Rosenberg. 2000. Partners In Flight: conservation of the landbirds of the United States. American Bird Conservancy, The Plains, Virginia.

Robbins, C.S., D. Bystrak and P.H. Geissler. 1986. The breeding bird survey: its first fifteen years, 1965-1979. U.S. Fish and Wildlife Service Resource Publishing 157.

Sauer, J.R., J.E. Hines, G. Gough, I. Thomas, and B.J. Peterjohn. 1997. The North American breeding bird survey results and analysis. Version 96.4. Patuxent Wildlife Research Center, Laurel, Maryland. Accessed December 1999 at: *http://www.mbr-pwrc.usgs.gov/bbs/bbs.html.*

Sepik, G.F., R.B. Owen, Jr., M.W. Coulter. 1981. Reprinted 1992. A landowners guide to woodcock management in the Northeast. Maine Agricultural Experiment Station, University of Maine. Miscellaneous Report 253. pp 7-12.

Strassman, B.I. 1987. Effects of cattle grazing and haying on wildlife conservation at National Wildlife Refuges in the USA. Environmental Management.

Swanson, D.A. 2001. Effects of management practices on grassland birds: savannah sparrow. Northern Prairie Wildlife Research Center, Jamestown, North Dakota. Northern Prairie Wildlife Research Center Home Page. Accessed February 2000 at: *http://www.npwrc.usgs.gov/resource/literatr/grasbird/savannah/savannah.htm*.

Vickery, P.D. 1996. Grasshopper Sparrow (*Ammodramus savannarum*). *In:* A. Poole and F. Gill, eds., The Birds of North America, No. 239. The Academy of Natural Sciences, Philadelphia, PA, and The American Ornithologists' Union, Washington, DC.

U.S. Department of Agriculture, Natural Resources Conservation Service. 2010. American Woodcock: Habitat Best Management Practices for the Northeast by Scot J. Williamson. Wildlife Insight. Washington, DC.

U.S. North American Bird Conservation Initiative Committee. 2000. North American Bird Conservation Initiative; bringing it all together. U.S. Fish and Wildlife Service, Arlington, Virginia.

U.S. Fish and Wildlife Service (USFWS). 1982. Refuge Manual: 6 RM 5.6C. Division of Refuges, Arlington, Virginia.

____. 1985. Refuge Manual. Washington, DC. U.S. Government Printing Office. 5 RM 17, 6 RM 5, 6 RM 9.

____. 1988. Final environmental assessment, proposal to establish Sunkhaze Meadows National Wildlife Refuge.

____. 1992. Sunkhaze Meadows National Wildlife Refuge preliminary station management plan.

____. 1993. Sunkhaze Meadows National Wildlife Refuge Annual Narratives 1989-1993. Unpublished reports in refuge files.

____. 2002. Birds of conservation concern 2002. Division of Migratory Bird Management, Arlington, Virginia.

____. 2013. Sunkhaze Meadows National Wildlife Refuge and Carlton Pond Waterfowl Production Area Draft Comprehensive Conservation Plan and Environmental Assessment. Spring 2013.

Young, L.S. 1989. Effects of agriculture on raptors in the Western United States: an overview. National Wildlife Federal Science Technology Service.

FWS Form 3-2319
02/06

FINDING OF APPROPRIATENESS OF A REFUGE USE

Refuge Name: Silvio O. Conte National Fish and Wildlife Refuge

Use: Non-traditional Geocaching

This form is not required for wildlife-dependent recreational uses, take regulated by the State, or uses already described in a refuge CCP or step-down management plan approved after October 9, 1997.

Decision Criteria:	**YES**	**NO**
(a) Do we have jurisdiction over the use?	✔	
(b) Does the use comply with applicable laws and regulations (Federal, State, Tribal, and local)?	✔	
(c) Is the use consistent with applicable Executive orders and Department and Service policies?	✔	
(d) Is the use consistent with public safety?	✔	
(e) Is the use consistent with goals and objectives in an approved management plan or other document?	✔	
(f) Has an earlier documented analysis not denied the use or is this the first time the use has been proposed?	✔	
(g) Is the use manageable within available budget and staff?	✔	
(h) Will this be manageable in the future within existing resources?	✔	
(i) Does the use contribute to the public's understanding and appreciation of the refuge's natural or cultural resources, or is the use beneficial to the refuge's natural or cultural resources?	✔	
(j) Can the use be accommodated without impairing existing wildlife-dependent recreational uses or reducing the potential to provide quality (see section 1.6D, 603 FW 1, for description), compatible, wildlife-dependent recreation into the future?	✔	

Where we do not have jurisdiction over the use ["no" to (a)], there is no need to evaluate it further as we cannot control the use. Uses that are illegal, inconsistent with existing policy, or unsafe ["no" to (b), (c), or (d)] may not be found appropriate. If the answer is "no" to any of the other questions above, we will **g**enerally not allow the use.

If indicated, the refuge manager has consulted with State fish and wildlife agencies. Yes __✔__ No _____.

When the refuge manager finds the use appropriate based on sound professional judgment, the refuge manager must justify the use in writing on an attached sheet and obtain the refuge supervisor's concurrence.

Based on an overall assessment of these factors, my summary conclusion is that the proposed use is:

Not Appropriate _____ **Appropriate** __✔__

Refuge Manager: _____ Date: _____

If found to be **Not Appropriate**, the refuge supervisor does not need to sign concurrence if the use is a new use.

If an existing use is found **Not Appropriate** outside the CCP process, the refuge supervisor must sign concurrence.

If found to be **Appropriate**, the refuge supervisor must sign concurrence:

Refuge Supervisor: _____ Date: _____

A compatibility determination is required before the use may be allowed.

JUSTIFICATION FOR A FINDING OF APPROPRIATENESS OF A REFUGE USE

Refuge Name: Silvio O. Conte National Fish and Wildlife Refuge

Use: Non-traditional Geocaching

NARRATIVE:

Non-traditional geocaching activities are not priority public uses; however, they can facilitate priority public uses on the refuge. When designed carefully, non-traditional geocaching activities can be used as a form of interpretation to educate the public about the U.S. Fish and Wildlife Service (Service), the National Wildlife Refuge System (Refuge System), and the Silvio O. Conte National Fish and Wildlife Refuge (Conte Refuge). Non-traditional geocaching can also facilitate wildlife observation and photography. One of the goals of the Service and the Refuge System is to provide opportunities to view wildlife and to partake in interpretation. Allowing the use of the Silvio O. Conte National Fish and Wildlife Refuge areas that are already open to the public, such as designated roads, trails, pull-outs, overlooks, and visitor contact facilities, to persons engaging in non-traditional geocaching supports this goal.

Traditional geocaching is not appropriate on national wildlife refuges because it does not comply with Federal regulations or Service policies because it involves leaving behind objects (e.g., physical caches) and may involve digging which could disturb sensitive natural and cultural resources. Unlike traditional geocaching, in non-traditional geocaching physical caches (e.g., boxes, trinkets, etc.) are not left behind. Instead, non-traditional geocaching involves using Global Positioning System (GPS) receivers or mobile devices to navigate to certain locations to find visitor facilities, natural or cultural features of interest, wildlife-viewing hotspots, interpretive signs, etc. Visitors engaged in non-traditional geocaching would walk, hike, snowshoe, cross-country ski along refuge trails, boat in authorized areas, or bicycle or drive on public roadways.

All non-traditional geocaching programs, including but not limited to virtual geocaching, letterboxing, earthcaching , Trail Link and GPS Adventure, on the refuge would be designed or approved by refuge staff to ensure that they support priority public uses and to minimize impacts to refuge wildlife and habitats. Non-traditional geocaching would also only be allowed in locations open to the public and the majority of use would occur along refuge trails and roads and inside refuge facilities. Therefore, non-traditional geocaching is anticipated to have the same level of impacts as those under the primary public uses, because the access and activities are very similar. Because these activities will be supervised by refuge staff, impacts of geocaching will likely be minimal when conducted in accordance with refuge regulations.

Geocaching opportunities advertised on appropriate public Web sites would build awareness of the Refuge System and would attract new visitors, many of whom would partake in wildlife dependent activities while at the refuge. Additionally, non-traditional geocaching activities would not materially interfere with or detract from the fulfillment of the Refuge System mission or the purpose for which the refuge was established, and it would encourge geocachers to stop at the visitor center to obtain refuge or wildlife viewing information.

For the reasons above, non-traditional geocaching is an appropriate use on all divisions and units of the Conte Refuge, with the exception of the Dead Man's Swamp and the Wissatinnewag Units, which are closed to the public to protect sensitive resources, and the Mount Tom Unit, which is currently closed due to public safety and vandalism concerns.

This finding of appropriateness and the compatibility determination for this use was distributed for public comment for 90 days from August 18, 2015 to November 16, 2015 as part of the review of the Silvio O. Conte Refuge's draft CCP/EIS. Comments we received on this use were considered as we developed this final determination. A summary of comments received on the draft plan is included in appendix O of the final CCP/EIS. This finding will undergo another 30-day review with release of the final CCP/EIS.

COMPATIBILITY DETERMINATION

USE:

Non-traditional Geocaching

REFUGE NAME:

Silvio O. Conte National Fish and Wildlife Refuge (Conte Refuge)

DATE ESTABLISHED:

October 3, 1997

ESTABLISHING AND ACQUISITION AUTHORITY(IES):

- Silvio O. Conte National Fish and Wildlife Refuge Act (Public Law 102-212).
- Migratory Bird Conservation Act of 1929.
- Land and Water Conservation Fund Act of 1965.

REFUGE PURPOSE(S):

- To conserve, protect, and enhance the Connecticut River populations of Atlantic salmon, American shad, river herring, shortnose sturgeon, bald eagles, peregrine falcons, osprey, black ducks, and other native species of plants, fish, and wildlife.
- To conserve, protect, and enhance the natural diversity and abundance of plant, fish and wildlife species and the ecosystem upon which these species depend within the refuge.
- To protect species, listed as endangered or threatened, or identified as candidates for listing, pursuant to the Endangered Species Act of 1973 (ESA) as amended (16 U.S. 1531 et seq.).
- To restore and maintain the chemical, physical, and biological integrity of wetland and other waters within the refuge.
- To fulfill the international treaty obligations of the United States relating to fish and wildlife and wetlands.
- To provide opportunities for scientific research, environmental education, and fish and wildlife oriented recreation and access to the extent compatible with the other purposes stated in this section.

NATIONAL WILDLIFE REFUGE SYSTEM MISSION:

To administer a national network of lands and waters for the conservation, management, and where appropriate, restoration of the fish, wildlife, and plant resources and their habitats within the United States for the benefit of present and future generations of Americans.

DESCRIPTION OF USE

(a) What is the use? Is it a priority public use?
The use is non-traditional geocaching, including virtual geocaching, letterboxing, earthcaching, trail link.

Traditional geocaching is an outdoor activity in which the participants use a GPS receiver or mobile device or other navigational technique to find, hide, and seek containers, called “geocaches” or “caches.” A typical cache is a small, waterproof container containing a logbook where the geocacher enters the date that they found it and signs it. Larger containers such as plastic storage containers or ammunition boxes can also contain items

for trading, usually toys or trinkets of little value. Traditional geocaching is not appropriate and not compatible on national wildlife refuges because it does not comply with Federal regulations or U.S. Fish and Wildlife Service policies and guidance because it involves leaving behind objects and may involve digging which could disturb sensitive natural and cultural resources.

However, non-traditional geocaching generally does not involve leaving or removing a physical cache. Examples of non-traditional geocaching include virtual geocaching, earthcaching, Trail Link, letterboxing, and GPS Adventure. While this is not a complete list, these forms of geocaching focus on the use of a GPS or other means to locate places of interest such as a landmark, or a scenic vista rather than a hidden box with items to trade. These listed forms of non-traditional geocaching are allowable on national wildlife refuges if found appropriate and compatible. Below are more details on these types of non-traditional geocaching:

> *Virtual Geocaching (www.waymarking.com)* uses hand held GPS devices, but the goal of the activity is different [from traditional geocaching] and the activity can be enjoyed without placing a physical cache. Virtual caching provides GPS coordinates to existing points of interest, such as a facility, cultural feature, wayside exhibit, or object in public areas.
>
> *Letterboxing* (*www.letterboxing.org*) involves the placement of a cache containing a stamp and an inkpad that participants use to document that they have discovered a specific location. Participants find the location by following "clues" offered on the web involving map coordinates or compass bearings. We would only allow letterboxing to occur inside refuge visitor contact stations because it does involve leaving behind a stamp and inkpad.
>
> *Earthcaching* (*www.earthcache.org*) is a type of virtual geocache. The Web site lists a number of virtual caches which are educational in purpose and judged for suitability by a team supported by the Geological Society of America.
>
> *Trail Link* is a partnership between *Geocaching.com* and the Rails to Trails Conservancy to collect mapping data for over 15,000 miles of trails Nationwide. Members of the Rails to Trails Conservancy are encouraged to capture GPS coordinates as they hike. The GPS coordinates can be supplemented with photos and other interpretive information about particular points along the trails. For more information about the program and its possible application to Refuge System trails, visit *www.geocaching.com/railstotrails/default.aspx*.
>
> *GPS Adventures* (*http://www.gpsmaze.com/index.html*) is a program that incorporates lesson plans from a number of educational programs about geography, history, science, and technology. The program includes a GPS Adventures Maze to provide students with hands-on exploration of the use of GPS technology in support of school programs.

Non-traditional geocaching is not a priority public use. However, it can be used to facilitate priority public uses of the Refuge System under the National Wildlife Refuge System Administration Act of 1966 (16 U.S.C. 668dd-668ee), and the National Wildlife Refuge System Improvement Act of 1997 (Public Law 105-57), such as interpretation, wildlife observation, and wildlife photography. This can be achieved by using the geocaching activity to lead visitors to areas of interest, to create a virtual tour that interprets different parts of the refuge, and by leading visitors into visitor centers or visitor contact centers where they can partake in other interpretation and education events. To ensure non-traditional geocaching supports priority public uses, we would only allow non-traditional geocaching opportunities on the refuge that are designed or approved by appropriate refuge staff.

(b) Where will these uses be conducted?
All non-traditional geocaching activities will be allowed only in areas of the refuge open to the public. All geocache routes must be approved by refuge staff prior to their use. Geocaching activities will avoid areas sensitive to disturbance (e.g. sensitive vegetation areas, sensitive breeding areas, areas with endangered, threatened, or rare animals and plans) or degradation (e.g. soil compaction), and will be designed to minimize impacts to endangered species, nesting birds, or other breeding, feeding, or resting wildlife. Certain areas of the Conte Refuge may be temporarily or seasonally closed to this use at the refuge manager's discretion to protect sensitive habitats or species of concern, minimize conflicts with other refuge activities, or due to human health and safety concerns.

(c) When will the uses be conducted?
Geocaching can occur throughout the year during daylight hours on all refuge division and units, with the following exceptions:

Third Island Unit

The Third Island Unit is seasonally closed (January 1 through July 31) to protect nesting bald eagles.

Deadmans Swamp, Wissitinnewag, and Mount Tom Units

The Deadmans Swamp and the Wissitinnewag Units are closed to the public to protect sensitive resources. Currently, the Mount Tom Unit is also currently closed due to public safety and vandalism concerns.

(d) How will the uses be conducted?
Non-traditional geocaching can be used as a tool to get people to visit refuge divisions and units. Interpretive materials associated with geocaching will give the general public an opportunity to learn about the refuge, the Refuge System, and the Service. Geocaching is self-regulating with cache coordinates and clues listed on appropriate organization Web sites (see Web site link above in the description of use) along with any special rules and instructions. All geocaches will be designed to keep visitors within open public areas, generally along refuge trails and roads and at other public use facilities. Some geocaches may not be available year-round depending on weather conditions, staffing, and seasonal wildlife-related closures. When geocaches are not available, this will be posted on appropriate organization Web sites to notify possible visitors. All geocaches need to be approved by appropriate refuge staff and should support priority public uses (interpretation, environmental educations, wildlife observation, photography, fishing, and hunting). All areas where geocaching will be allowed are already managed by the refuge for other wildlife dependent activities.

Visitors engaged in non-traditional geocaching would walk, hike, snowshoe, or cross-country ski along refuge trails, boat in authorized areas, or bicycle or drive on public roadways. To partake in geocaching, visitors enter the refuge divisions and units at public entry points or drive to refuge parking areas and walk from there. Visitors may park vehicles at refuge parking areas, along the shoulders of designated refuge roads (Nulhegan Basin Division), and where legal, along public roads. Information about where to park to access a particular geocache will be listed on appropriate geocaching Web sites. Informational kiosks at the Nulhegan Basin Division and the Pondicherry Division currently explain permitted public uses. Similar parking lots and informational kiosks are planned for the entry of each refuge division and unit. Visitors will also participate in geocaching by walking, hiking, snowshoeing or cross-country skiing on wildlife observation trails on the refuge. Designated wildlife observation trails on the refuge are described and interpreted in the trail brochures and on the Web site. As trail connections are made, refuge brochures and kiosks will be updated to show all designated trails. Visitors may also access geocaches from small, motorized or non-motorized water craft; however, water access is difficult and limited in most of the refuge divisions and units; so, this is not expected to be a major source for geocaching. Finally, visitors may also partake in geocaching via bicycle on designated refuge roads where vehicle use by the public is allowed.

Geocaching can occur on an individual or group basis. To accommodate other users and promote a positive wildlife observation experience, we encourage smaller group sizes (less than 10 members).

(e) Why are these uses being proposed?
Geocaching activities are not priority public uses; however, they facilitate priority public uses on the refuge. When designed carefully, geocaching activities can be used as a form of interpretation to educate the public about refuge management challenges and goals, refuge missions, and about priority public uses. Through geocaching, visitors will have the opportunity to observe and learn about wildlife and wild lands at their own pace in both structured and unstructured environments, and to observe wildlife in their natural habitats firsthand. Likewise, geocaching provides visitors with opportunities to enjoy refuge resources and to gain a better understanding and appreciation of fish and wildlife, wild lands ecology, the relationships of plant and animal populations in an ecosystem, and wildlife management. These activities will enhance public understanding of natural resource management programs and ecological concepts, enable the public to better understand the problems facing our wildlife and wild lands resources, help visitors to better understand how they affect wildlife and other natural resources, and learn about the Service's role in conservation and restoration.

Geocaching opportunities advertised on appropriate public Web sites would build awareness of the Refuge System and would attract new visitors, many of whom would partake in wildlife dependent activities while at the refuge. Additionally, people partaking in geocaching would be encouraged to stop at refuge informational kiosks and visitor centers/contact stations to obtain refuge or wildlife viewing information, or to partake in a wildlife dependent activity.

AVAILABILITY OF RESOURCES

The following list estimates the required costs for the refuge to administer and manage geocaching as a form of interpretation. They do not include the costs of new construction, kiosks, signs and other costs associated with the Comprehensive Conservation Plan (CCP). They also do not cover unanticipated costs such as participation in search and rescue operations. The refuge officer is the primary contact for any emergency operations on the refuge, however local resources are available to assist and provide significant resources if necessary. Because such an incident is uncommon and unpredictable, these costs are not assumed in the resources estimate below.

Costs	
Program Oversight (wildlife refuge manager and visitor services manager):	$2,000
Monitoring Resource Impacts (wildlife biologist):	$1,800
Materials	$500
Total annual recurring costs:	$4,300

The financial and staff resources necessary to provide and administer these uses at their current levels are now available. We expect the resources to continue in the future, subject to availability of appropriated funds.

ANTICIPATED IMPACTS OF THE USE

The proposed use is anticipated to have the same level of impacts as those under the primary public uses, because the access and activities are very similar. Because these activities will be supervised by refuge staff, impacts of geocaching will likely be minimal if conducted in accordance with refuge regulations.

Following are descriptions of potential adverse effects on natural resources from geocaching accessed by walking, hiking, and motorized or non-motorized boating in authorized areas within the refuge.

In general, we expect impacts to refuge resources to be negligible or minor because the projected level of use is low, geocache courses must be approved by refuge staff, and the use will occur in areas of the refuge already open to public use. We will consider each proposed geocache course for its potential to impact refuge resources, and will not approve any that we feel will lead to adverse impacts to soils, wildlife, vegetation, water quality, or hydrology. For example, we would not approve a geocache course or site that would encourage visitors to walk through sensitive wetlands or through important breeding habitat. If, after approved, a particular geocache course causes any issues or negative impacts on refuge resources, we will relocate or discontinue that geocache course.

Effects on Hydrology and Water Quality: Visitor use has the potential to contaminate lakes, ponds, streams and the major tributaries of the Connecticut River. Exposed soils on hiking trails may increase sediments in near-by waterways, and petroleum products may be introduced by run-off from parking lots. However, overall we do not anticipate any major impacts to hydrology and water quality because these uses are limited to designated areas only, current and projected levels of use are relatively low, and we will build, maintain, and monitor trails and roads in such as ways as to minimize impacts.

Non-traditional geocaching will generally occur on or along designated roads, trails, pull-outs, overlooks, and visitor contact facilities that are on Service-owned areas. Buffers will be required on trails that are adjacent to waterways to decrease bank erosion, and filter contaminants before they enter waterbodies. Boardwalks will provide a path for users to cross over the wetlands or streams and not through them, thereby minimizing long-term adverse effects to hydrology and water quality. In addition, refuge staff will routinely monitor roads, trails, and boardwalks for damage and remediate problem areas as needed. Although some off-trail use may occur, the majority of users stay on trails and roads. Off-trail use would be dispersed and occur at low levels.

Some non-traditional geocaching may occur via motorized or non-motorized boating on refuge waterbodies in accordance with station boating regulations. The most likely locations for motor boating are Lewis Pond at the Nulhegan Basin Division and McConnell Pond, which is proposed for addition to this division. The use of motorboats is currently estimated at one to two boats per week. This low level of use is expected to continue into the future and is expected to have only minimal impacts to water quality. Boat speeds are not to exceed 5 miles per hour, so boat wakes and the associated erosion is not anticipated.

Refuge parking lots will not be located directly adjacent to streams, rivers, or other wetlands. Additionally, where feasible, parking lots will be constructed of gravel, which is more porous than impervious surfaces such as asphalt, and therefore would result in lower levels of runoff and sedimentation.

Effects on Vegetation: To facilitate geocaching, we will allow hiking, cross-country skiing, and snowshoeing access on areas open to the public and bicycle and automobile access on designated roads. Short-term effects consist of the deterioration of plant material, whereas long-term effects of trampling include direct and indirect effects on vegetation and soils like diminishing soil porosity, aeration, and nutrient availability through soil compaction (Kuss 1986, Roovers et al. 2004). Compaction of soils thus limits the ability of plants, particularly rare and sensitive species, to revegetate affected areas (Hammitt and Cole 1998). Kuss (1986) found that plant species adapted to wet or moist habitats are the most sensitive and increased moisture content reduces the ability of the soil to support recreational traffic. Where adverse impacts to vegetation are observed, the refuge will take necessary measures, such as remediation and trail closures, to restore plant communities.

It is anticipated that allowing foot traffic will cause some vegetation loss, increased tree root exposure and trampling effects, however we will minimize the potential for impacts to vegetation by encouraging users to stay on designated trails and roads including former logging roads with hardened surfaces and existing trails that have been used for many years. Although some off-trail use may occur, the majority of users stay on trails and roads. Off-trail use would be dispersed and occur at low levels.

Unmanaged non-traditional geocaching has the potential to damage or kill plants adjacent to designated trails and can lead to new unwanted "impromptu" trails on the refuge that become "short-cuts" through more ecologically sensitive sites. Heavy use of designated, managed, or unmanaged pedestrian travel routes can ultimately lead to areas void of vegetation (McDonnell 1981, Vaske et al 1992). We will encourage users to remain on existing trails and roads through signage and refuge brochures. It is also anticipated that under current and projected use the incidence of these problems will be minor. Some rare plants have been documented in habitat adjacent to trails; however, designated routes do not have any known occurrences of rare plant species on their surface or soils subject to compaction that will be impacted by this use. Because cross-country skiing and snowshoeing only occur during the winter, when plants are dormant and the ground is covered with snow, we anticipate negligible impacts to vegetation from cross-country skiing and snowshoeing. We will not allow bicycles or automobiles off of refuge roads. Refuge staff will monitor all trails, identify problem areas, and conduct appropriate restoration and protection efforts.

People can be vectors for invasive plants when seeds or other propagules are moved from one area to another. The threat of invasive plant establishment would always be an issue requiring annual monitoring, and when necessary, treatment. Staff would work to educate the visiting public to reduce introductions and would also monitor and control invasive species.

Effects on Soils: Soils can be compacted and eroded as a result of continued use of pedestrian routes (Cole and Landres 1995). It is anticipated that some soil compaction, erosion, and sedimentation would occur as a result of continuing pedestrian access. Geocaching is not expected to substantially increase trail use beyond what would be seen by the four priority public uses of environmental education, interpretation, wildlife observation, and wildlife photography. The majority of visitors stay on trails and roads. To protect sensitive resources, we may close areas of the refuge seasonally or permanently to minimize impacts.

Effects on Wildlife: Short-term and long-term adverse impacts will be expected for wildlife populations in relation to increasing trail miles and visitor use. However, we do not anticipate any major, long-term impacts on wildlife from allowing these uses because current and projected levels of use are relatively low and these uses are only allowed in designated areas, such as trails and roads.

Disturbances to wildlife will vary by wildlife species involved and the type, level, frequency, duration, and the time of year activities occur. Beale and Monaghan (2004) found that adverse effects to wildlife increase

as number of users increase. The study found that an animal's response to one visitor walking down a trail is entirely different than its response to a group of users walking down a trail. The refuge recognizes that large group sizes may amplify negative effects to wildlife. Therefore, groups larger than 10 are required to notify the refuge prior to visiting to determine if a special use permit (SUP) would be needed. This will enable the refuge to understand which trails are preferred by large groups, and to monitor any potential excessive wildlife disturbance created by large groups. Having the ability to monitor these kinds of disturbances will also enable the refuge to mitigate impacts associated with large groups. Examples of mitigation may include directing large groups to less sensitive habitats during breeding seasons or assigning refuge staff to lead or meet with the group while on refuge lands.

Other responses of wildlife to human activities includes: avoidance or departure from the site (Owen 1973, Burger 1981, Kaiser and Fritzell 1984, Korschen et al. 1985, Henson and Grant 1991, Kahl 1991, Klein 1993, Whittaker and Knight 1998), use of sub-optimal habitat (Erwin 1980, Williams and Forbes 1980), altered behavior or habituation to human disturbance (Burger 1981, Korschen et al. 1985, Morton et al. 1989, Ward and Stehn 1989, Havera et al. 1992, Klein 1993), attraction (Whittaker and Knight 1998), and an increase in energy expenditure (Morton et al. 1989, Belanger and Bedard 1990). Knight and Cole (1991) suggest recreational activities occurring simultaneously may have a combined negative impact on wildlife. Hammitt and Cole (1998) concluded that the frequent presence of humans in wildland areas can dramatically change the normal behavior of wildlife mostly through "unintentional harassment." These responses can have negative impacts to wildlife such as mammals becoming habituated to humans making them more susceptible to hunting mortality. Human induced avoidance by wildlife can prevent animals from using otherwise suitable habitat. Seasonal sensitivities can compound the effect of disturbance on wildlife. Both bird and mammal species which are present and active during the winter have the added environmental stressors of severe weather and food shortages, and can be more negatively affected than they would from the same level of disturbance during the warmer seasons (Hammit and Cole 1998). However, many migratory birds are not present in the winter, and most resident species are not breeding or raising young during the time of year when cross-country skiing and snowshoeing occur. Additionally, many mammal species are less active during winter months

Disturbance can cause shifts in habitat use, abandonment of habitat and increased energy demands on affected wildlife (Knight and Cole 1991). Miller et al. (1998) found bird abundance and nesting activities (including nest success) increased as distance from a recreational trail increased in both grassland and forested habitats. In this study, common species (e.g., American Robins) were found near trails and rare species (e.g., blackburnian warblers) were found farther from trails. In some cases there is a clear link between the extent of disturbance and either the survival or reproductive success of individuals (e.g., Schulz and Stock 1993), but in many cases disturbance act in a more subtle way, by reducing access to resources such as food supplies or nesting sites (Gill et al. 1996). Bird flight in response to disturbance can lower reproductive success by exposing individuals and nests to predators. For recreation activities that occur simultaneously (hiking, biking, and horseback riding) there will likely be compounding negative impacts to wildlife (Knight and Cole 1991).

Evidence suggests that species most likely to be adversely affected are those where available habitat is limited thus constraining them to stay in disturbed areas and suffer the costs of reduced survival or reproductive success (Gill et al. 2001). This is especially true for federally listed species, as well as other species that are sensitive to human disturbance with specialized habitat requirements, such as bald eagle, peregrine falcon, and American black duck (DeGraff et al. 2001, Longcore et al. 2000). We will not allow geocaching where any federally listed species occurs. Also, limiting or closing recreational use within the vicinity of nest sites during the breeding season will mitigate impacts to other sensitive and rare species. For example, the Third Island Unit of the refuge is closed to these uses to protect bald eagles during the sensitive breeding season. Additionally, trail development has striven and will continue to avoid sensitive habitats.

Wildlife disturbance may be compounded by seasonal needs. For example, causing mammals to flee during winter months would consume stored fat reserves that are necessary to get through the winter. Hammitt and Cole (1998) found white-tailed deer females with young are more likely to flee from disturbance than those without young. Some species, like warblers, would be negatively affected by disturbance associated with bird watching particularly during the breeding season.

For songbirds, Gutzwiller et al. (1994) found that low levels of human intrusion altered the singing behavior of some species. Disturbance may also affect the reproductive fitness of males by hampering territory defense,

mate selection, and other reproductive functions of vocalizations (Arrese 1987). Disturbance, which leads to reduced singing activity, makes males rely more heavily on physical deterrents, which are time- and energy-consuming in defending territories (Ewald and Carpenter 1978).

Short-term localized adverse impacts to fish populations may result from refuge construction and restoration projects that might cause soil erosion and sedimentation into refuge waterways. Long-term adverse impacts from increased trail miles and trail use might pose another concern to refuge fisheries. Trails that have stream and river crossings will likely degrade over time with increased use and contribute to downstream sedimentation and turbidity, which has been found to be a stressor to brook trout (Sweka and Hartman 2001) and redside dace (Holm and Crossman 1986) populations that are sensitive to habitat degradation. Buffers will be required for trails located along riparian areas to decrease erosion of river banks, and filter contaminants before they enter waterways. The refuge will monitor stream and river crossings closely and remediate any damaged areas to minimize adverse impacts associated with trail use.

Refuge visitors who choose to boat may cause localized, minor, short-term impacts by disturbing the bottom substrate in shallow water. In addition, discarded items such as plastic containers present a risk for waterfowl and other birds.

We will take all necessary measures to minimize all of these impacts, particularly where geocaches are involved. We will evaluate the sites and programs periodically to assess whether they are meeting the objectives, and to prevent site degradation. If evidence of unacceptable adverse impacts appears, we will rotate the activities to secondary sites, or curtail or discontinue them. We will close areas seasonally around active bird nesting sites and avoid recreational use of areas where federally listed species occur to minimize or eliminate human disturbance. We will post and enforce refuge regulations, and establish, post, and enforce closed areas.

PUBLIC REVIEW AND COMMENT

A finding of appropriateness and this compatibility determination were distributed for public comment for 90 days from August 18, 2015 to November 16, 2015 as part of the review of the Silvio O. Conte Refuge's draft CCP/EIS. Comments we received on this use were considered as we developed this final determination. This determination will undergo another 30-day review with release of the final CCP/EIS. A summary of comments received on the draft plan is included in appendix O of the final CCP/EIS.

DETERMINATION (CHECK ONE BELOW):

____ Use is not compatible

__X__ Use is compatible, with the following stipulations

STIPULATIONS NECESSARY TO ENSURE COMPATIBILITY:

- No geocache shall be created or posted on public Web sites without the permission of appropriate refuge staff.
- Geocaches shall be created only in areas open to the public.
- All individuals partaking in geocaching must adhere to area closures and understand that certain geocaches may not be available year-round.
- Appropriate notification must be listed on public Web sites when a geocache is not available as a result of area closures.
- No physical item shall be placed or left on the refuge.
- Letterboxing would only be allowed within visitor contact stations or visitor centers.

- Appropriate notification about the availability of letterboxes based on staffing and visitor contact station open hours will be posted on all public Web sites.

- Refuge regulations will be posted and enforced. Closed areas will be established as needed, posted, and enforced. Signs necessary for visitor information, safety, and traffic control will be kept up to date.

- The known presence of a threatened or endangered species will preclude any new use of an area until the refuge manager determines otherwise.

- Locations for geocaching will be chosen to minimize impacts to wildlife and habitat. We will periodically evaluate sites and programs to assess whether objectives are being met and to prevent site degradation. If evidence of unacceptable adverse impacts appears, the location(s) of activities will be rotated with secondary sites, curtailed, or discontinued.

- Walking, hiking, snowshoeing, cross-country skiing, bicycling, driving and boating to facilitate geocaching is only compatible in designated areas of the refuge open to the public.

- Walking, hiking, snowshoeing, cross-country skiing, bicycling, driving, and boating are restricted to refuge open hours: one-half hour before sunrise until one-half after sunset (except the Nulhegan Basin Division, which is open 24 hours a day, 7 days a week).

- Boat launching and retrieval from refuge lands are restricted to refuge open hours.

- Camping and overnight parking are currently prohibited.

- Group size is encouraged to be no more than 10 persons to promote public safety, accommodate other users, and reduce wildlife disturbance. Groups larger than 10 persons must contact the refuge office prior to visiting the trail system so the refuge can determine if the group will require a SUP. Groups traveling only on roads shared with vehicles are not required to contact the refuge office or obtain a SUP.

- All routes designated for public access are annually inspected for maintenance needs. Prompt action is taken to correct any conditions that risk public safety. Roads and trails are maintained at a level that reasonably accounts for safe travel. Roads are not plowed in winter.

- Guidelines to ensure the safety of all participants will be issued in writing to any SUP holder for the activities and will be reviewed before the activity begins.

- Routes designated for public access are monitored periodically to determine if they continue to meet the compatibility criteria established by the refuge. Should monitoring and evaluation of the use(s) indicate that the compatibility criteria are or will be exceeded, appropriate action will be taken to ensure continued compatibility, including modifying or discontinuing the use.

- Routine law enforcement patrols are conducted throughout the year. The patrols promote education and compliance with refuge regulations, monitor public use patterns and public safety, and document visitor interaction.

- Potential conflicts with other public uses such as hunting will be minimized by using trailhead signs and other media to inform the visitors about current public use activities as well as which activities are authorized in specific locations throughout the refuge.

JUSTIFICATION

The Service and the Refuge System maintain the goal of providing opportunities to view wildlife and to partake in interpretation and wildlife observation and photography. Allowing the use of refuge areas that are already open to the public to persons engaging in non-traditional geocaching supports this goal. Non-traditional geocaching would provide visitors the chance to view wildlife and partake interpretation about the refuge; hence, promoting public appreciation of the conservation of wildlife and habitats. Non-traditional geocaching activities are not priority public uses; however they facilitate priority public uses on the refuge, and in some cases can be used as a form of interpretation which is a priority public use. In general, we expect impacts to refuge resources to be negligible or minor because the projected level of use is low, geocache courses must be approved by refuge staff, and the use will occur in areas of the refuge already open to public use and the use will occur at low levels. We will consider each proposed geocache course for its potential to impact refuge resources, and will not approve any that we feel will lead to adverse impacts to soils, wildlife, vegetation, water quality, or hydrology. If, after approved, a particular geocache course causes any issues or negative impacts on refuge resources, we will relocate or discontinue that geocache course. For these reasons, we believe that non-traditional geocaching activities would not materially interfere with or detract from the fulfillment of the Refuge System mission or the refuge's purposes.

SIGNATURE:

Refuge Manager: _____ _____
(Signature) (Date)

CONCURRENCE:

Regional Chief: _____ _____
(Signature) (Date)

MANDATORY 10-YEAR RE-EVALUATION DATE:

_____

LITERATURE CITED:

Arrese, P. 1987. Age, intrusion pressure and defense against floaters by territorial male Song Sparrows. Animal Behavior 35:773-784.

Beale, C.M. and P. Monaghan. 2004. Human disturbance: people as predation-free predators? Journal of Applied Ecology 41:335-343.

Belanger, L. and J. Bedard. 1990. Energetic cost of man-induced disturbance to staging snow geese. Journal of Wildlife Management 54:36-41.

Burger, J. 1981. The effect of human activity on birds at a coastal bay. Biological Conservation.

Cole, D.N., and P.B. Landres. 1995. Indirect effect of recreation on wildlife in Knight, R.L, and K.J. Gutzwiller, eds. 1995. Wildlife and Recreationists—Coexistence Through Management and Research. Washington, DC, Island Press.

Ewald P.W., and F.L. Carpenter. 1978. Territorial responses to energy manipulations in the Anna hummingbird. Oecologia 31: 277-292.

Gill, J. A., W.J. Sutherland, and A. R. Watkinson. 1996. A method to quantify the effects of human disturbance on animal populations. Journal of Applied Ecology 33:786-792.

Gutzwiller, K.J., R.T. Wiedenmann, K. L. Clements, and S. H. Anderson. 1994. Effects of human intrusion on song occurrence and singing consistence in subalpine birds. The Auk 111: 28–37.

Hammitt, W.E., and D.N. Cole. 1998. Wildlife Recreation: Ecology and Management (2nd edition). New York: John Wiley & Sons. 361p.

Havera, S.P., L.R. Boens, M.M. Georgi, and R.T. Shealy. 1992. Human disturbance of waterfowl on Keokuk Pool, Mississippi River. Wildlife Society Bulletin 20:290-298.

Henson, P.T., and A. Grant. 1991. The effects of human disturbance on trumpeter swan breeding behavior. Wildlife Society Bulletin 19:248-257.

Holm, E. and E.J. Crossman. 1986. A report on a 1985 attempt to resurvey areas within the Ontario distribution of Clinostomus elongatus, the redside dace and to summarize previous records. Unpublished report on file Fisheries Branch, Ontario Ministry of Natural Resources and Royal Ontario Museum. 11 pages, 9 tables, 13 figs.

Kahl, R. 1991. Boating disturbance of canvasbacks during migration at Lake Poygan, Wisconsin. Wildlife Society Bulletin 19:242-248.

Kaiser, M.S. and E.K. Fritzell. 1984. Effects of river recreationists on green-backed heron behavior. Journal of Wildlife Management 48:561-567.

Klein, M.L.1993. Waterbird behavioral responses to human disturbance. Wildlife Society Bulletin 21:31-39.

Knight, R.L., and D.N. Cole. 1991. Effects of recreational activity on wildlife in wildlands. Transactions of the 56th North American Wildlife and Natural Resources Conference pp.238-247.

Korschen, C.E., L.S. George, and W.L. Green. 1985. Disturbance of diving ducks by boaters on a migrational staging area. Wildlife Society Bulletin 13:290-296.

Kuss, F.R. 1986. A review of major factors influencing plant responses to recreation impacts. Environmental Management, 10:638-650.

Longcore et al 2001.

McDonnell, M.J. 1981. Trampling effects on coastal dune vegetation in the parker river national wildlife refuge, Massachusetts, USA. Biological Conservation 21(4): 289-301.

Miller, S.G., R.L. Knight, and C.K. Miller. 1998. Influence of recreational trails on breeding bird communities. Ecological Applications 8:162-169.

Morton, J.M., A.C. Fowler, and R.L. Kirkpatrick. 1989. Time and energy budgets of American black ducks in winter. Journal of Wildlife Management 53: 401-410 (also see corrigendum in Journal of Wildlife Management 54:683).

Roovers, P., K. Verheyen, M. Hermy, and H. Gulinck. 2004. Experimental trampling and vegetation recovery in some forest and heathland communities. Applied Vegetation Science 7:111-118.

Sweka, J.A., and K. J. Hartman. 2001. Effects of turbidity on prey consumption and growth in brook trout and implications for bioenergetics modeling. Canadian Journal of Fisheries and Aquatic Sciences 58: 386-393.

Ward, D.H., and R.A. Stehn. 1989. Response of brant and other geese to aircraft disturbance at Izembek Lagoon, Alaska. U.S. Fish and Wildlife Service, Alaska Fish and Wildlife Research Center. Final report to the Minerals Management Service. Anchorage, Alaska. 193 pp.

Whittaker, D., and R.L. Knight. 1998. Understanding wildlife responses to humans. Wildlife Society Bulletin 26:312–317.

Williams, G.J., and E. Forbes. 1980. The habitat and dietary preferences of dark-bellied brant geese and widgeon in relation to agricultural management. Wildfowl 31:151-157.

Vaske J.V., R.D. Deblinger, and M.P. Donnelly. 1992. Barrier beach impact management planning: Findings from three locations in Massachusetts. Canadian Water Resources Assoc. Journal 17: 278-290.

FWS Form 3-2319
02/06

FINDING OF APPROPRIATENESS OF A REFUGE USE

Refuge Name:
Silvio O. Conte National Fish and Wildlife Refuge

Use: Pet Walking

This form is not required for wildlife-dependent recreational uses, take regulated by the State, or uses already described in a refuge CCP or step-down management plan approved after October 9, 1997.

Decision Criteria:	**YES**	**NO**
(a) Do we have jurisdiction over the use?	✔	
(b) Does the use comply with applicable laws and regulations (Federal, State, Tribal, and local)?	✔	
(c) Is the use consistent with applicable Executive orders and Department and Service policies?	✔	
(d) Is the use consistent with public safety?	✔	
(e) Is the use consistent with goals and objectives in an approved management plan or other document?	✔	
(f) Has an earlier documented analysis not denied the use or is this the first time the use has been proposed?	✔	
(g) Is the use manageable within available budget and staff?	✔	
(h) Will this be manageable in the future within existing resources?	✔	
(i) Does the use contribute to the public's understanding and appreciation of the refuge's natural or cultural resources, or is the use beneficial to the refuge's natural or cultural resources?	✔	
(j) Can the use be accommodated without impairing existing wildlife-dependent recreational uses or reducing the potential to provide quality (see section 1.6D, 603 FW 1, for description), compatible, wildlife-dependent recreation into the future?	✔	

Where we do not have jurisdiction over the use ["no" to (a)], there is no need to evaluate it further as we cannot control the use. Uses that are illegal, inconsistent with existing policy, or unsafe ["no" to (b), (c), or (d)] may not be found appropriate. If the answer is "no" to any of the other questions above, we will generally not allow the use.

If indicated, the refuge manager has consulted with State fish and wildlife agencies. Yes ___✔___ No ____.

When the refuge manager finds the use appropriate based on sound professional judgment, the refuge manager must justify the use in writing on an attached sheet and obtain the refuge supervisor's concurrence.

Based on an overall assessment of these factors, my summary conclusion is that the proposed use is:

Not Appropriate _____ **Appropriate** ___✔___

Refuge Manager: _____ Date: _____

If found to be **Not Appropriate**, the refuge supervisor does not need to sign concurrence if the use is a new use.

If an existing use is found **Not Appropriate** outside the CCP process, the refuge supervisor must sign concurrence.

If found to be **Appropriate**, the refuge supervisor must sign concurrence:

Refuge Supervisor: _____ Date: _____

A compatibility determination is required before the use may be allowed.

603 FW 1
Exhibit 1
Page 2

JUSTIFICATION FOR A FINDING OF APPROPRIATENESS OF A REFUGE USE

Refuge Name: Silvio O. Conte National Fish and Wildlife Refuge

Use: Pet Walking

NARRATIVE:

Individuals walking, hiking, snowshoeing, and cross-country skiing at the Silvio O. Conte National Fish and Wildlife Refuge (Conte Refuge) have been accompanied by their pets (domestic canine and feline) for many years. Because domestic animals can disturb wildlife and generate conflicts with other refuge visitors, pet owners will be required to leash their pets (10-foot or shorter leash) at all times. Limiting pet walking to only those areas open to the public would also minimize potential disturbance to wildlife. The majority of pet walking occurs on refuge trails and roads. No adverse impacts have been observed in the past and current levels of this use are low and are not expected to increase substantially. Continuing to allow this use would provide the public with additional options for enjoying the great outdoors and possibly introduce new people to the refuge and the priority use of wildlife observation. For these reasons, we have determined that allowing pet walking on the refuge is consistent with the U.S. Fish and Wildlife Service's policy on the appropriateness of refuge uses (603 FW 1).

This finding of appropriateness and the compatibility determination for this use was distributed for public comment for 90 days from August 18, 2015 to November 16, 2015 as part of the review of the Silvio O. Conte Refuge's draft CCP/EIS. Comments we received on this use were considered as we developed this final determination. A summary of comments received on the draft plan is included in appendix O of the final CCP/EIS. This finding will undergo another 30-day review with release of the final CCP/EIS.

COMPATIBILITY DETERMINATION

USE:

Pet Walking

REFUGE NAME:

Silvio O. Conte National Fish and Wildlife Refuge (Conte Refuge)

DATE ESTABLISHED:

October 3, 1997

ESTABLISHING AND ACQUISITION AUTHORITY(IES):

- Silvio O. Conte National Fish and Wildlife Refuge Act (Public Law 102-212).
- Migratory Bird Conservation Act of 1929.
- Land and Water Conservation Fund Act of 1965.

REFUGE PURPOSE(S):

- To conserve, protect, and enhance the Connecticut River populations of Atlantic salmon, American shad, river herring, shortnose sturgeon, bald eagles, peregrine falcons, osprey, black ducks, and other native species of plants, fish, and wildlife.
- To conserve, protect, and enhance the natural diversity and abundance of plant, fish and wildlife species and the ecosystem upon which these species depend within the refuge.
- To protect species, listed as endangered or threatened, or identified as candidates for listing, pursuant to the Endangered Species Act of 1973 (ESA) as amended (16 U.S. 1531 et seq.).
- To restore and maintain the chemical, physical, and biological integrity of wetland and other waters within the refuge.
- To fulfill the international treaty obligations of the United States relating to fish and wildlife and wetlands.
- To provide opportunities for scientific research, environmental education, and fish and wildlife oriented recreation and access to the extent compatible with the other purposes stated in this section.

NATIONAL WILDLIFE REFUGE SYSTEM MISSION:

To administer a national network of lands and waters for the conservation, management, and where appropriate, restoration of the fish, wildlife, and plant resources and their habitats within the United States for the benefit of present and future generations of Americans.

DESCRIPTION OF USE:

(a) What is the use? Is the use a priority public use?
The use is walking leashed pets on refuge trails and in other designated areas. Pet walking is not a priority public use of the National Wildlife Refuge System (Refuge System) under the National Wildlife Refuge System Administration Act of 1966 (16 U.S.C. 668dd-668ee), as amended by the National Wildlife Refuge System Improvement Act of 1997 (Public Law 105-57).

(b) Where would the use be conducted?
On-leash pet walking would be permitted on all designated roads, trails, pull-outs, and overlooks, and in other designated areas open to the public. By encouraging visitors with pets to stay on refuge trails and roads, we will minimize impacts to sensitive areas prone to disturbance (e.g., sensitive vegetation areas) or degradation (e.g., soil compaction) and would minimize impacts to threatened and endangered species, nesting birds or other breeding, feeding, or resting wildlife. Certain areas of the refuge may be permanently or seasonally closed to public access at the refuge manager's discretion to protect sensitive habitats or species of concern, minimize conflicts with other refuge activities, or due to human health and safety concerns.

(c) When would the use be conducted?
All pet walking activities will occur during regular refuge hours, which are generally one-half hour before sunrise to one-half hour after sunset, with the following exceptions:

Nulhegan Basin Division

The Nulhegan Basin Division is open 24 hours a day, 7 days a week. However, roads are closed to vehicular access during winter and the spring "mud" season, generally re-opening prior to the Memorial Day weekend.

Third Island Unit

The Third Island Unit is seasonally closed (January 1 through July 31) to protect nesting bald eagles.

Dead Man's Swamp, Wissitinnewag, and Mount Tom Units

The Dead Man's Swamp and the Wissitinnewag Units are closed to the public to protect sensitive resources. Currently, the Mount Tom Unit is closed to the public due to public safety and vandalism concerns.

(d) How would the use be conducted?
Refuge visitors are only allowed to walk their pet on the refuge if it is attached to a 10-foot (or shorter) leash and the pet walker is in control of the leash and pet at all times. The leash requirement will help keep pets on existing roads and trails, minimize disturbance to wildlife, minimize conflicts with other visitors, and ensure public safety. All pet walkers with properly leashed pets would be restricted to designated roads, trails, pull-outs, and overlooks, and in other areas open to the public.

(e) Why is the use being proposed?
Pet walking is an ongoing use on many of the refuge divisions and units, and has been occurring without any evidence that it is a significant disruption or consistently causing damage. It has been a long-time tradition for residents of the local communities to use these portions of the refuge for this activity building strong local support and allowing an excellent opportunity to educate pet walkers about the refuge and the Refuge System.

AVAILABLITY OF RESOURCES:

Except for maintaining and periodically updating existing signs explaining the regulations, minimal costs would be involved. Monitoring of the site for compliance would continue, but would not require significantly more resources beyond those already necessary to patrol the area for compliance with current regulations. Compliance with the leash regulation is within the regular duties of the refuge's federal wildlife officer. The financial and staff resources necessary to provide and administer this use at its current level and at the level described in the final comprehensive conservation plan (CCP) are now available and we expect them to be available in the future. The annualized cost associated with the administration of pedestrian travel on the refuge is estimated below:

Providing information to the public and administration needs	$1,000
Resource impacts and monitoring	$800
Total:	**$1,800**

Based on a review of the budget allocated for management of this activity, funding is adequate to ensure compatibility, and to administer and manage the use listed. Our existing staff and budget have provided sufficient resources to manage this use historically.

ANTICIPATED IMPACTS OF THE USE:

Effects on Hydrology and Water Quality: Pet walking is not expected to substantially increase use and the following impacts beyond what would be seen by the four priority public uses of environmental education, interpretation, wildlife observation, and wildlife photography. Visitor use has the potential to contaminate lakes, ponds, streams and the major tributaries of the Connecticut River. Exposed soils on walking trails may increase sediments in nearby waterways, and petroleum products may be introduced by run-off from parking lots. Contaminants from pet waste may runoff into waterways if not properly picked up and disposed. However, overall, we do not anticipate any major impacts to hydrology and water quality because these uses are limited to designated areas only, current and projected levels of use are relatively low, and we will build, maintain, and monitor trails and roads in a manner to minimize impacts.

Pet walking will generally occur on designated trails and roads. Although some unauthorized pet walking will occur off trail, visitors will be strongly encouraged to stay on refuge trails (where they exist) and the majority of pet walking occurs on existing trails and roads. Buffers will be required on trails that are adjacent to waterways to decrease bank erosion, and filter contaminants before they enter waterbodies. Boardwalks will provide a path for users to cross over the wetlands or streams and not through them, thereby minimizing long-term adverse effects to hydrology and water quality. In addition, refuge staff will routinely monitor roads, trails, and boardwalks for damage and remediate problem areas as needed.

Refuge parking lots will not be located directly adjacent to streams, rivers, or other wetlands. Additionally, where feasible, parking lots will be constructed of gravel, which is more porous than impervious surfaces such as asphalt, and therefore would result in lower levels of runoff and sedimentation.

Effects on Vegetation: People engaged in pet walking generally hike, cross-country ski, and snowshoeing along designed trails and roads. Pet walking is not expected to substantially increase use and the following impacts beyond what would be seen by the four priority public uses of environmental education, interpretation, wildlife observation, and wildlife photography. Short-term effects consist of the deterioration of plant material, whereas long-term effects of trampling include direct and indirect effects on vegetation and soils like diminishing soil porosity, aeration, and nutrient availability through soil compaction (Kuss 1986, Roovers et al. 2004). Compaction of soils thus limits the ability of plants, particularly rare and sensitive species, to revegetate affected areas (Hammitt and Cole 1998). Kuss (1986) found that plant species adapted to wet or moist habitats are the most sensitive and increased moisture content reduces the ability of the soil to support recreational traffic. Where adverse impacts to vegetation are observed, the refuge will take necessary measures, such as remediation and trail closures, to restore plant communities.

It is anticipated that allowing foot traffic on designated routes will cause some vegetation loss, increased tree root exposure and trampling effects, however we will minimize the potential for impacts to vegetation by encouraging visitors to stay on designated trails and roads, including former logging roads with hardened surfaces and existing trails that have been used for many years.

Heavy use of designated, managed, or unmanaged pedestrian travel routes can ultimately lead to areas devoid of vegetation (McDonnell 1981). However, current and projected levels of visitor use on the refuge are low. We will also encourage users to remain on existing trails and roads through signage and refuge brochures to minimize impacts to vegetation. Although some off-trail use will occur, it will be dispersed and occur at low levels. It is anticipated that under current and projected use the incidence of these problems will be minor. Some rare plants have been documented on the refuge; however, designated routes do not have any known occurrences of rare plant species on their surface or soils subject to compaction that will be impacted by this use. If necessary, we will close portions of the refuge seasonally or permanently to protect sensitive species and habitats. Because cross-country skiing and snowshoeing only occur during the winter, when plants are dormant and the ground is covered with snow, we anticipate negligible impacts to vegetation from cross-country skiing and snowshoeing. We will not allow bicycles or automobiles off of refuge roads. Refuge staff will monitor all trails, identify problem areas, and conduct appropriate restoration and protection efforts.

People and pets can be vectors for invasive plants when seeds or other propagules are moved from one area to another. The threat of invasive plant establishment would always be an issue requiring annual monitoring, and when necessary, treatment. Staff would work to educate the visiting public to reduce introductions and would also monitor and control invasive species.

Effects on Soils: Soils can be compacted and eroded as a result of continued use of pedestrian routes (Cole and Landres 1995). It is anticipated that some soil compaction, erosion, and sedimentation would occur as a result

of continuing to allow pedestrian access. Pet walking is not expected to substantially increase use and these impacts beyond what would be seen by the four priority public uses of environmental education, interpretation, wildlife observation, and wildlife photography. Further, we will minimize these impacts by only allowing pet walking in areas open to the public and if necessary, close portions of the refuge to use to avoiding wetlands and other sensitive habitats.

Effects on Wildlife: The presence of dogs, or other pets, may flush incubating birds from nests (Yalden and Yalden 1990), disrupt breeding displays (Baydack 1986), disrupt foraging activity in shorebirds (Hoopes 1993), disturb roosting activity in ducks (Keller 1991), and displaced and reduced fitness in grassland and forest species (Miller et al. 2001). Many of these authors indicated that people with dogs on a leash provoked more disturbance than people walking without a dog, and loose dogs provoked the most pronounced disturbance reactions from their study animals. However, Miller et al. (2001) found that the presence of a human walking caused grassland bird species to flush and displace longer distances than the presence of a dog alone, while there was no difference in response of forest bird species. In the same study, mule deer exhibited the greatest response in the presence of a dog alone versus a human walking alone.

The greatest stress reaction results from unanticipated disturbance. Animals show greater flight response to humans moving unpredictably than to humans following a distinct path (Gabrielson and Smith 1995). Despite thousands of years of domestication, dogs still maintain instincts to hunt and chase. The appropriate stimulus can trigger those instincts. Dogs that are unleashed or not under the control of their owners may disturb or threaten the lives of some wildlife. In effect, off-leash dogs increase the radius of human recreational influence or disturbance beyond what it would be in the absence of a dog. To minimize these impacts, we require that pet walkers must have their pets on leash at all times and pet walkers must be in control of the leash and pets at all times.

Constant human and pet disturbance can cause shifts in habitat use, abandonment of habitat and increased energy demands on affected wildlife (Knight and Cole 1991). Miller et al. (1998) found bird abundance and nesting activities (including nest success) increased as distance from a recreational trail increased in both grassland and forested habitats. In this study, common species (e.g., American robins) were found near trails and rare species (e.g., Blackburnian warblers) were found farther from trails. In some cases there is a clear link between the extent of disturbance and either the survival or reproductive success of individuals (e.g., Schulz and Stock 1993), but in many cases disturbance acts in a more subtle way, by reducing access to resources such as food supplies or nesting sites (Gill et al. 1996). Bird flight in response to disturbance can lower reproductive success by exposing individuals and nests to predators. For recreation activities that occur simultaneously (hiking, biking, and horseback riding) there will likely be compounding negative impacts to wildlife (Knight and Cole 1991).

Evidence suggests that species most likely to be adversely affected are those where available habitat is limited, thus constraining them to stay in disturbed areas and suffer the costs of reduced survival or reproductive success (Gill et al. 1996). This is especially true for federally listed species. This use will not occur where any federally listed species occur. Other species that are sensitive to human disturbance with specialized habitat requirements include bald eagle, peregrine falcon, and American black duck (DeGraff et al. 2001, Longcore et al. 2000). Limiting or closing recreational use within the vicinity of nest sites during the breeding season will mitigate impacts to these species. For example, we do not permit use at the refuge's Dead Man's Swamp unit to protect the federally listed puritan tiger beetle and seasonally close the Third Island Unit to limit disturbance to breeding and nesting bald eagles. Where necessary, we will close portions of the refuge to protect listed, rare, or sensitive wildlife. Additionally, trail development has and will continue to avoid sensitive habitats.

Wildlife disturbance may be compounded by seasonal needs. For example, causing mammals to flee during winter months would consume stored fat reserves that are necessary to get through the winter. Hammitt and Cole (1998) found white-tailed deer females with young are more likely to flee from disturbance than those without young. Some species, like warblers, would be negatively affected by disturbance associated with bird watching particularly during the breeding season.

For songbirds, Gutzwiller et al. (1994) found that low levels of human intrusion altered the singing behavior of some species. Disturbance may also affect the reproductive fitness of males by hampering territory defense, mate selection, and other reproductive functions of vocalizations (Arrese 1987). Disturbance, which leads to reduced singing activity, makes males rely more heavily on physical deterrents, which are time- and energy-consuming in defending territories (Ewald and Carpenter 1978).

Pet walkers staying on existing trails and roads will be important to minimize impacts to wildlife. In a study by Miller et al. (2001), species, area of influence, flush distance, distance moved, and alert distance were almost always greater when activities occurred off-trail versus on-trail. The study suggests that because recreational activities occurred frequently on trails and were spatially predictable, wildlife likely habituated to activity in these locations. To minimize these impacts, we require that pet walkers must have their pets on leash at all times, pet walkers must be in control of the leash and pets at all times, and pet walkers and their pets remain on existing trails and roads.

The role of dogs and other pets in wildlife diseases is poorly understood. However, dogs can host endo- and ectoparasites, and can contract diseases from or transmit diseases to wild animals. In addition, pet waste is known to transmit diseases that may threaten the health of some wildlife and other domesticated animals. Domestic pets potentially can introduce various diseases and transport parasites into wildlife habitats (Sime 1999). To minimize the potential for disease transmission, we require that pet walkers must have their pets on leash at all times, pet walkers must be in control of the leash and pets at all times, and pet walkers remove pet wastes from the refuge.

Because the visitor use is light and pet walking would be restricted to areas open to the public where disturbance may already occur due to other public use activities, the potential impacts to wildlife and their habitats are expected to be minimal. In addition, the requirement for dogs to be kept on a 10-foot (or shorter) leash will minimize the impacts to other users and wildlife.

Impacts to Other Visitor Uses: User conflicts are unlikely because this use occurs at low levels on the refuge and pets would be on-leash and in control of pet walkers, and in the majority of cases, prevented from disturbing other users. The presence of people and pets may scare away wildlife; thus, has the potential to disturb wildlife observers and wildlife photographers. However, these uses will likely occur in more remote areas of the refuge away from heavily used trails. Pet waste is unsightly and may carry pathogens, but these impacts may be minimized by requiring pet walkers to pick up their pet's waste.

PUBLIC REVIEW AND COMMENT:

A finding of appropriateness and this compatibility determination were distributed for public comment for 90 days from August 18, 2015 to November 16, 2015 as part of the review of the Silvio O. Conte Refuge's draft CCP/EIS. Comments we received on this use were considered as we developed this final determination. This determination will undergo another 30-day review with release of the final CCP/EIS. A summary of comments received on the draft plan is included in appendix O of the final CCP/EIS.

DETERMINATION (CHECK ONE BELOW):

____ Use is not compatible

__X__ Use is compatible, with the following stipulations

STIPULATIONS NECESSARY TO ENSURE COMPATIBILITY:

- Only leashed pets would be allowed on the refuge. The leash must be no more than 10 feet long. Pet walkers would be required to maintain control of their animal while on the refuge, thereby reducing the potential and severity of impacts to wildlife and must refrain from entering closed areas.
- Pet walking is allowed only during refuge open hours (generally one-half hour before sunrise until one-half hour after sunset).
- All individuals partaking in pet walking must adhere to area closures and understand that certain areas of refuge divisions and units may not be available year-round.
- Pet walking will only occur on designated roads, trails, pull-outs, and overlooks, and in other designated areas open to the public in order to reduce the potential disturbance of wildlife. Areas of the refuge may be closed seasonally or permanently to this use to minimize disturbance to wildlife and sensitive habitats and/or reduce conflicts between user groups.

- Pet walkers must pick up after their pet(s) and remove or properly dispose of pet waste off the refuge.
- Agency and public awareness would be increased through interpretive or educational materials about responsible pet ownership in the context of wildlife disturbance during all outdoor recreational pursuits.
- If a high number of reports of negative pet-wildlife or pet-people interactions on the refuge trails are reported, the refuge would reassess the use.
- If a high number of off-leash incidents are documented, we may consider eliminating pet walking from the refuge.

JUSTIFICATION:

Although pets can increase disturbance to wildlife, the refuge will strictly enforce a leash requirement to keep pet and disturbances localized with the pedestrian. This is an existing use at the refuge, with no history of significant negative impacts. There are no documented incidents of domestic pet-wildlife disturbances or of pet-human conflicts. The majority of pet walkers are local residents who regularly visit the refuge for wildlife-dependent recreation and who understand our policies. The Service and the Refuge System maintain goals of providing opportunities to view wildlife. Allowing pet walking on the refuge may facilitate wildlife observation. These users may take the time to learn more about the refuge and become, or already be, supporters of the Refuge System.

Because this use is restricted to designated roads, trails, pull-outs, and overlooks, and other designated areas open to the public, away from sensitive wetland habitats and wildlife, and the current levels of the use are low, we anticipate that this use would have only negligible, minor, and temporary impacts on refuge resources. Because of this, it is consistent with the wildlife and habitat aspects of the refuge's purposes, the Service policy on compatible uses, the Refuge System Improvement Act of 1997, and the broad management objectives of the Refuge System. Pet walking would not harm threatened and endangered species because of the leash requirement and because pets will be restricted from defined endangered species areas. Therefore, no significant adverse effects from pet walking are anticipated and this activity would not materially interfere with or detract from the mission of the Refuge System.

SIGNATURE:

Refuge Manager: _____ _____
(Signature) (Date)

CONCURRENCE:

Regional Chief: _____ _____
(Signature) (Date)

MANDATORY 10-YEAR RE-EVALUATION DATE:

_____

LITERATURE CITED:

Arrese, P. 1987. Age, intrusion pressure and defense against floaters by territorial male Song Sparrows. Animal Behavior 35:773-784.

Baydack, R.K. 1986. Sharp-tailed grouse response to lek disturbance in the Carberry Sand Hills of Manitoba. Colorado State University, Fort Collins, Colorado.

Cole, D.N., and P.B. Landres. 1995. Indirect effect of recreation on wildlife in Knight, R.L, and K.J. Gutzwiller, eds. 1995. Wildlife and Recreationists—Coexistence Through Management and Research. Washington, D.C., Island Press.

DeGraff, R.M., V.E. Scott, R.H. Hamre, L. Ernst, and S.H. Anderson. 1991. Forest and rangeland birds of the United States: Natural history and habitat use. Agric. Handbook 688. Washington, D.C., U.S. Forest Service. 625pp.

Ewald P.W. and F.L. Carpenter. 1978. Territorial responses to energy manipulations in the Anna hummingbird. Oecologia 31: 277-292.

Gabrielson, G.W. and E.N. Smith. 1995. Physiological responses of wildlife to disturbance. Pages 95-107 in R.L. Knight and K.J. Gutzwiller, ed. Wildlife and Recreationists: coexistence through management and research. Island Press, Washington, D.C. 372pp.

Gill, J.A., W.J. Sutherland, and A.R. Watkinson. 1996. A method to quantify the effects of human disturbance on animal populations. Journal of Applied Ecology 33:786-792.

Gutzwiller, K.J., R.T. Wiedenmann, K.L. Clements, and S.H. Anderson. 1994. Effects of human intrusion on song occurrence and singing consistence in subalpine birds. The Auk 111: 28–37.

Hammitt, W. E. and D. N. Cole. 1998. Wildlife Recreation: Ecology and Management (2nd edition). New York: John Wiley & Sons. 361p.

Hoopes, E.M. 1993. Relationships between human recreation and piping plover foraging ecology and chick survival. Thesis, University of Massachusetts, Amherst, Massachusetts.

Keller, V. 1991. Effects of human disturbance on eider ducklings *Somateria mollissima* in an estuarine habitat in Scotland. Biological Conservation 58:213-228.

Knight, R.L. and D.N. Cole. 1991. Effects of recreational activity on wildlife in wildlands. Transactions of the 56th North American Wildlife and Natural Resources Conference pp.238-247.

Kuss, F.R. 1986. A review of major factors influencing plant responses to recreation impacts. Environmental Management, 10:638-650.

Longcore, J.R., D.G. McAuley, G.R. Hepp, and J.M. Rhymer. 2000. American Black Duck (*Anas rubripes*). *In*, The Birds of North America, No. 481 (A. Poole and F. Gill, eds.) The Birds of North America, Inc., Philadelphia, PA.

McDonnell, M.J. 1981. Trampling effects on coastal dune vegetation in the Parker River National Wildlife Refuge, Massachusetts, USA. Biological Conservation 21(4): 289-301.

Miller, S.G., R.L. Knight, and C.K. Miller. 1998. Influence of recreational trails on breeding bird communities. Ecological Applications 8:162-169.

Miller, S.G., R.L. Knight, and C.K. Miller. 2001. Wildlife responses to pedestrians and dogs. Wildlife Society Bulletin, 29(1):124-132.

Roovers, P., K Verheyen, M. Hermy, and H. Gulinck. 2004. Experimental trampling and vegetation recovery in some forest and heathland communities. Applied Vegetation Science 7:111-118.

Sime, C.A. 1999. Domestic Dogs in Wildlife Habitats. Pp. 8.1-8.17 in G. Joslin and H. Youmans, coordinators. Effects of recreation on Rocky Mountain wildlife: A Review for Montana. Committee on Effects of Recreation on Wildlife, Montana Chapter of The Wildlife Society.

Yalden, P.E. and D. Yalden. 1990. Recreational disturbance of breeding golden plovers (*Pluvialis apricarius*). Biological Conservation 51:243-262.

FWS Form 3-2319
02/06

FINDING OF APPROPRIATENESS OF A REFUGE USE

Refuge Name: Silvio O. Conte National Fish and Wildlife Refuge

Use: Privately Owned Recreational Cabins at the Nulhegan Basin Division

This form is not required for wildlife-dependent recreational uses, take regulated by the State, or uses already described in a refuge CCP or step-down management plan approved after October 9, 1997.

Decision Criteria:	**YES**	**NO**
(a) Do we have jurisdiction over the use?	✔	
(b) Does the use comply with applicable laws and regulations (Federal, State, Tribal, and local)?	✔	
(c) Is the use consistent with applicable Executive orders and Department and Service policies?	✔	
(d) Is the use consistent with public safety?	✔	
(e) Is the use consistent with goals and objectives in an approved management plan or other document?	✔	
(f) Has an earlier documented analysis not denied the use or is this the first time the use has been proposed?	✔	
(g) Is the use manageable within available budget and staff?	✔	
(h) Will this be manageable in the future within existing resources?	✔	
(i) Does the use contribute to the public's understanding and appreciation of the refuge's natural or cultural resources, or is the use beneficial to the refuge's natural or cultural resources?		✔
(j) Can the use be accommodated without impairing existing wildlife-dependent recreational uses or reducing the potential to provide quality (see section 1.6D, 603 FW 1, for description), compatible, wildlife-dependent recreation into the future?	✔	

Where we do not have jurisdiction over the use ["no" to (a)], there is no need to evaluate it further as we cannot control the use. Uses that are illegal, inconsistent with existing policy, or unsafe ["no" to (b), (c), or (d)] may not be found appropriate. If the answer is "no" to any of the other questions above, we will generally not allow the use.

If indicated, the refuge manager has consulted with State fish and wildlife agencies. Yes___✔___No ____.

When the refuge manager finds the use appropriate based on sound professional judgment, the refuge manager must justify the use in writing on an attached sheet and obtain the refuge supervisor's concurrence.

Based on an overall assessment of these factors, my summary conclusion is that the proposed use is:

Not Appropriate _____ **Appropriate** ___✔___

Refuge Manager: _____ Date:_____

If found to be **Not Appropriate**, the refuge supervisor does not need to sign concurrence if the use is a new use.

If an existing use is found **Not Appropriate** outside the CCP process, the refuge supervisor must sign concurrence.

If found to be **Appropriate**, the refuge supervisor must sign concurrence:

Refuge Supervisor: _____ Date: _____

A compatibility determination is required before the use may be allowed.

603 FW 1
Exhibit 1
Page 2

JUSTIFICATION FOR A FINDING OF APPROPRIATENESS OF A REFUGE USE

Refuge Name: Silvio O. Conte National Fish and Wildlife Refuge

Use: Privately Owned Recreational Cabins at the Nulhegan Basin Division

NARRATIVE:

Fifty-nine privately owned recreational cabins existed on the Nulhegan Basin Division at the time of U.S. Fish and Wildlife Service (Service) acquisition, of which 30 currently remain. Additionally, the McConnell Pond tract, proposed for acquisition in the preferred alternative, contains an additional eight cabins. These cabins have occupied leased land from Champion International Corporation and The Conservation Fund, and their predecessors for many decades. These are managed under a SUP which includes an annual fee. The current permits will not be extended beyond 2049, the 50-year sunset date. We anticipate enacting a similar sunset date for any cabins acquired with the McConnell Pond tract. Provided funding is available, we also offer to purchase cabins at the owners' discretion. Continuing to allow this use is consistent with the Service's policy on the appropriateness of refuge uses (603 FW 1) because this use has little impact on refuge management activities, wildlife, or wildlife habitat given that this use has been occurring for upwards of 50 years.

This finding of appropriateness and the compatibility determination for this use was distributed for public comment for 90 days from August 18, 2015 to November 16, 2015 as part of the review of the Silvio O. Conte Refuge's draft CCP/EIS. Comments we received on this use were considered as we developed this final determination. A summary of comments received on the draft plan is included in appendix O of the final CCP/EIS. This finding will undergo another 30-day review with release of the final CCP/EIS.

COMPATIBILITY DETERMINATION

USE:

Privately Owned Recreational Cabins at the Nulhegan Basin Division

REFUGE NAME:

Silvio O. Conte National Fish and Wildlife Refuge (Conte Refuge)

DATE ESTABLISHED:

October 3, 1997

ESTABLISHING AND ACQUISITION AUTHORITY(IES):

- Silvio O. Conte National Fish and Wildlife Refuge Act (Public Law 102-212).
- Migratory Bird Conservation Act of 1929.
- Land and Water Conservation Fund Act of 1965.

REFUGE PURPOSE(S):

- To conserve, protect, and enhance the Connecticut River populations of Atlantic salmon, American shad, river herring, shortnose sturgeon, bald eagles, peregrine falcons, osprey, black ducks, and other native species of plants, fish, and wildlife.
- To conserve, protect, and enhance the natural diversity and abundance of plant, fish and wildlife species and the ecosystem upon which these species depend within the refuge.
- To protect species, listed as endangered or threatened, or identified as candidates for listing, pursuant to the Endangered Species Act of 1973 (ESA) as amended (16 U.S. 1531 et seq.).
- To restore and maintain the chemical, physical, and biological integrity of wetland and other waters within the refuge.
- To fulfill the international treaty obligations of the United States relating to fish and wildlife and wetlands.
- To provide opportunities for scientific research, environmental education, and fish and wildlife oriented recreation and access to the extent compatible with the other purposes stated in this section.

NATIONAL WILDLIFE REFUGE SYSTEM MISSION:

To administer a national network of lands and waters for the conservation, management, and where appropriate, restoration of the fish, wildlife, and plant resources and their habitats within the United States for the benefit of present and future generations of Americans.

DESCRIPTION OF USE:

(f) What is the use? Is it a priority public use?
The use is the occupancy and use of privately owned recreational cabins (camps), which are located on refuge lands. It is not a priority public use of the National Wildlife Refuge System (Refuge System), under the

National Wildlife Refuge System Administration Act of 1966 (16 U.S.C. 668dd-668ee), as amended by the National Wildlife Refuge System Improvement Act of 1997.

Recreational use of camps on timber company lands in the Nulhegan Basin originated in the early 1900s as logging camps were abandoned after forestry operations in an area were completed, and the company then permitted loggers to use and maintain them, primarily as hunting and fishing camps. Construction and use of privately owned camps on timber company lands began in the 1930s and accelerated in the 1960s. Camps were built on approximately 1-acre lots that were leased through an annual payment to the timber company. Ownership and use of these camps were often passed within families from generation to generation. About 190 camps were present on the 133,000 acres of Champion International Corporation lands in Essex County, Vermont, at the time of the sale of these lands to the Service, the Vermont Agency of Natural Resources, and Essex Timber Company (now Plum Creek Corporation) in 1999. Fifty-nine of these camps were located on the 26,000-acre parcel that was purchased by the Service as the Nulhegan Basin Division of the refuge.

The camps are located in the spruce-fir, northern hardwood, and mixed conifer/hardwood habitats that are typical on the division. Wildlife species occurring in the vicinity of camps include: various migratory birds, ruffed grouse, snowshoe hare, moose, white-tailed deer, black bear, various furbearers, reptiles and amphibians, and brook trout.

The majority of camps are of one-story, wood or log construction. Camps typically are small (<600 square feet). Expansions of camp size or additional buildings are not allowed, but routine maintenance of structures is permitted. No utilities service the camps. Water is obtained from pond, stream, or spring sources via a gravity flow system or from a generator-powered pump, or is hand carried to the camp from on or off the division. Heat is usually supplied by wood stoves. Firewood is either brought to the site from an off-refuge source or is cut from the lot, and is restricted to dead or downed wood only. Bottled (LP) gas in above-ground portable tanks is often used to power cooking stoves, refrigerators, and ceiling lamps. Most camps have separate, outdoor privies, but some have underground septic tanks. Cutting of live vegetation is restricted. The camp lots are not posted but the public is expected to reasonably respect the privacy of camp owners while using the division. Permitees are not allowed to restrict or interfere in any way with public use of the division, and are not granted exclusive use of any shoreline or water body. The construction of new cabins will not be permitted.

(g) Where would the use be conducted?
The 30 camps are scattered across the division, including the shoreline of Lewis Pond and along the branches of the Nulhegan River. An additional eight camps may be acquired with the McConnell Pond tract pursuant to the Comprehensive Conservation Plan's preferred alternative. Camps occur in all four towns in which the division is located: Bloomfield, Brunswick, Ferdinand, and Lewis. The McConnell Pond tract occurs primarily in the town of Brighton.

(h) When would the use be conducted?
Use of camps occurs year-round, but the duration of use is short-term. Generally the deer hunting season (mid- to late November) is the heaviest period of use. Otherwise, use occurs in an intermittent fashion, primarily on weekends. Use wanes significantly after late December through the winter and mud season, and then increases after the Memorial Day weekend. The number of people using an individual camp during any given stay varies greatly from one or two to perhaps eight or more during deer season. Camps are sometimes accessed via snowmobile in the winter from the statewide snowmobile trail system, which runs through the division, and occasionally via cross-country skis or snowshoes. Only seasonal use is permitted. The camps cannot be used as permanent, year-round residences.

(i) How would the use be conducted?
During the process leading up to acquisition of the division, the Service agreed to permit occupancy and use of those camps on the division for the life of the current lessees up to a 50-year maximum, as long as the use was determined to be compatible (USFWS 1999). Under no circumstances will occupancy and use of the existing camps on the division extend beyond July 21, 2049. Should the McConnell Pond tract be acquired, leases for those cabins occurring on that property will also terminate no later than July 21, 2049, pending negotiations with the current landowner. Under Service land ownership, use and occupancy of these camps will be administered through a SUP (SUP) system, the conditions of which are analogous to the former lease. We review the language and renew permits at a 5-year interval. The next renewal is slated for 2016. Permit fees are based on the appraised value of the property, which is determined by a market appraisal to be performed roughly every five years, as stipulated in the SUP.

Currently, 30 camps remain in private use: 22 are privately owned (meaning the private individual owns the cabin structure) and 8 are under term use agreements (meaning the Service owns the structure, but a private individual is leasing it for a pre-defined amount of time). The SUP for privately owned cabins expires in 2049 (50 years after the land was purchased). A term use compensates the leaseholder for his/her equity in the structure and the value of their use of the camp until 2049. The leaseholder decides the period of the term and approximately one percent of the value is deducted for each year of continued use. The duration of existing term use agreements ranges from 10 to 37 years. Holders of term use agreements must still adhere to the provisions of the permit, including the payment of annual lease fees and maintenance of adequate insurance. The Service also owns an additional two vacant structures.

The annual permit fee currently is $950, and $1,125 for the camps adjacent to Lewis Pond. These fees were increased in 2011, based on a market appraisal. Previously, fees had remained at $550 and $650, the same rates that were charged by Champion International at the time of purchase by the Service.

Property taxes on the value of the tenant-owned improvements are paid to the respective towns by the camp owners. The camps traditionally were associated with the area of surrounding use, usually approximately 1 acre. Most camps can be accessed by motor vehicle via gravel roads, but some can be accessed only by foot or boat.

The conditions of the SUP require that cabins must be maintained in a manner compatible with the purposes of the refuge and produce the least amount of environmental disturbance. Cabins may only be used for non-commercial recreational purposes, and cannot be used as a principal place of residence. Modifications of existing structures require prior approval by the refuge manager. Cutting live vegetation is restricted. We do not post the camp lots, but expect the public to reasonably respect the privacy of camp owners. A complete description of the permit conditions is attached (attachment 1).

(j) Why is this use being proposed?
Camp use is an important traditional use of timber lands in this region of Vermont, and this use predated acquisition of these lands by the Service. A 50-year phase-out of camps was a reasonable compromise between the agencies and public involved in the original land acquisition–and this was addressed and evaluated in the environmental assessment establishing the division (USFWS 1999). By managing this cabin lease program, the Service is following through on earlier commitments.

AVAILABILITY OF RESOURCES:

Funds from permit fees are deposited in a national "collections" account and then reapportioned by Congress to the Service. Such funds returned to the refuge amounted to $6,000 in fiscal year (FY) 2011, $9,000 in FY12, and $7,470 in FY13. Staff time associated with administration of this use is primarily related to processing annual permit fees, answering questions of permitees concerning SUP conditions, monitoring compliance with SUP conditions, and monitoring potential impacts of the use on refuge resources and visitors. The program is principally administered by the wildlife refuge manager and forester. Resource impacts will be monitored by the wildlife biologist, who is already assigned to the refuge. No special equipment, facilities, or resources are needed to administer this use. Road maintenance and signage installation are performed as needed to ensure adequate facilitation of priority public uses for the general public; therefore these operations already are being administered with annual appropriations. Refuge law enforcement resources are not directed toward providing safety for Permitees or security for their property beyond that which is expected for the general visiting public. Maintenance of camps and associated lots are the responsibility of Permit holders.

We estimate below the annual costs associated with the administration of the cabin lease program on the division.

Program Oversight (wildlife refuge manager):	$3,700
Processing Annual Permit Fees/Insurance (forester):	$1,600
Resource Impact Monitoring (wildlife biologist):	$1,000
Safety/Security (federal wildlife officer):	$2,100
Total Annual Cost of Program:	$8,400

ANTICIPATED IMPACTS OF THE USE:

Occupancy and use of privately owned camps on the division will not extend beyond July 21, 2049, as a matter of compliance with Title 50-*Wildlife and Fisheries*, Chapter 1, Part 26, Section 35 - *Cabin Sites*. Meanwhile, conditions for the permit are designed to help maintain the compatibility of this use, reduce negative impacts to refuge resources, and to minimize conflicts with refuge management and other uses of the refuge.

Possible impacts of this use include: direct loss of habitat, possible wildlife disturbances caused by camp occupancy or camp user travel along roads, slight additional hunting pressure on upland species, and impacts to sensitive wetland areas due to some camps being improperly located. Regarding direct loss of habitat, only approximately 35 non-contiguous acres are impaired during the short term. The Service has acquired, removed, and restored the habitat at 24 camp locations. This short-term use is not considered a significant impact on a 26,605-acre division. As permits expire or camps are sold to the Service most, if not all, camps will be relocated off-refuge or destroyed; therefore, there will be no long-term loss of habitat. Because the number of camps is low and they generally are not located in the proximity of any known major concentrations of waterfowl, shorebirds, or other wildlife, with the possible exception of wintering concentrations of white-tailed deer, and because travel and other activities by camp owners does not differ substantially in type or intensity than that allowed by the general public during allowed day-use activities, disturbance by occupancy and travel are not considered significant. Hunting, whether by camp occupants or the general public, is currently allowed according to State regulations and harvest levels are set so as not to impact game populations. Meanwhile, we designed the SUP conditions to help maintain the compatibility of this use, reduce negative impacts on refuge resources, and minimize conflicts among refuge management activities and other uses of the refuge. All camps have been inspected and no locations appear to be adversely affecting sensitive wetlands areas or other critical habitats. A Level I contaminants survey was performed on refuge lands prior to purchase and no contaminant problems were identified around camps. In addition, Level 1 surveys were completed on all the camps that have been acquired and no negative impacts were found.

This use is not anticipated to result in short-term or long-term impacts that would materially interfere with or detract from the fulfillment of the purposes for which the refuge was established or the mission of the National Wildlife Refuge System.

PUBLIC REVIEW AND COMMENT:

A finding of appropriateness and this compatibility determination were distributed for public comment for 90 days from August 18, 2015 to November 16, 2015 as part of the review of the Silvio O. Conte Refuge's draft CCP/EIS. Comments we received on this use were considered as we developed this final determination. This determination will undergo another 30-day review with release of the final CCP/EIS. A summary of comments received on the draft plan is included in appendix O of the final CCP/EIS.

DETERMINATION (CHECK ONE BELOW):

____ Use is not compatible

__X__ Use is compatible, with the following stipulations

STIPULATIONS NECESSARY TO ENSURE COMPATIBILITY:

See attached list of SUP Conditions (Attachment 1).

JUSTIFICATION:

This use has been determined to be compatible provided the Permit Special Conditions are implemented. This use will not diminish the purposes for which the refuge was established, will not pose significant adverse effects on trust species or other refuge resources, will not interfere with public use of the refuge, nor cause an undue administrative burden.

The occupancy and use of privately owned recreational camps on the refuge will not materially interfere with or detract from the fulfillment of the purposes for which the refuge was established or the mission of the Refuge System.

SIGNATURE:

Refuge Manager: _____ _____
(Signature) (Date)

CONCURRENCE:

Regional Chief: _____ _____
(Signature) (Date)

MANDATORY 10-YEAR RE-EVALUATION DATE: _____

LITERATURE CITED:

U.S. Fish and Wildlife Service. 1999. Final Environmental Assessment–U.S. Fish and Wildlife Service Participation in a Partnership to Protect "the Champion Lands" in Essex County, Vermont. 78 pp.

Attachment 1

SPECIAL USE PERMIT CONDITIONS

for

PRIVATELY OWNED CAMPS

on the

NULHEGAN BASIN DIVISION

Silvio O. Conte National Fish and Wildlife Refuge

Essex County, Vermont

May 1, 2011

The Nulhegan Basin Division of the Silvio O. Conte National Fish and Wildlife Refuge (Refuge) is a unit of the National Wildlife Refuge System (System), administered by the U.S. Fish and Wildlife Service (Service), a bureau of the U.S. Department of the Interior. The mission of the System, as stated in the National Wildlife Refuge System Improvement Act of 1997 (Public Law 105-57), is: *"To administer a national network of lands and waters for the conservation, management, and where appropriate, restoration of the fish, wildlife, and plant resources and their habitats within the United States for the benefit of present and future generations of Americans."*

The legislation further recognizes wildlife-dependent recreational uses involving hunting, fishing, wildlife observation and photography, and environmental education and interpretation as the priority public uses of the System. All uses of a refuge (including occurrence, use, and occupancy of privately owned camps) must be compatible with the System mission and the purposes of the individual refuge. A compatible use is a proposed or existing wildlife-dependent recreational use or any other use of a refuge that, based on sound professional judgment, will not materially interfere with or detract from the fulfillment of the National Wildlife Refuge System mission or the purpose(s) of the national wildlife refuge. Although the conditions below cannot in any way guarantee compatibility, they are designed in part to create the foundation for compatible use.

Camps were built and occupied through recreational leases on lands formerly owned by Champion International Corporation and St. Regis Paper Company, and maintenance of the existing camp sites was part of the Service's commitment in the Environmental Assessment (EA) that authorized the project when the property was acquired (U.S. Fish and Wildlife Service 1999). This special use permit (SUP) replaces the previous permit, which expired April 30, 2011, and will remain in effect through April 30, 2016. The use of the word "Premises" hereinafter refers to the privately owned camp and any associated buildings, and an approximately one-acre site on which such buildings are located as indicated on the "As-built Sketch" maintained in the Refuge's files. This Permit will be subject to the following conditions, to which the Permitee agrees to abide. The use of the term "Permitee" refers collectively to all leaseholders of record as of July 21, 1999. Violation of any of the following conditions will be grounds for termination of the permit at the sole discretion of the Service. In the event of Permit termination, Permitees may appeal the decision as provided in Title 50 - Code of Federal Regulations - Section 25.45 "Appeals Procedures," available upon request from the Refuge Manager.

1. Term.

A. The term of the Permit will be five (5) years, commencing May 1, 2011 and may be renewed for additional terms of five years, contingent upon compliance with all terms and conditions of this Permit, and on a determination by the Service that continued occupancy of the Premises is compatible with the purpose for which the Refuge was established, which determination will be re-evaluated every five years. However, Permits will not be renewed to allow any occupancy or use of the Premises beyond the life of the Permitee except in the case of an heir of the original Permitee as provided in Section 11 "Permit Assignment". Either party may cancel this Permit by giving notice in writing to the other party at least thirty (30) days prior to the last day of the original term or any renewal term, as applicable, unless sooner terminated under the provisions of this Permit. It is the intent of the Service to renew camp Permits for a maximum of fifty (50) years from date of Service acquisition of the Refuge, July 21, 1999, subject to compliance with Permit conditions and continued compatibility (see pages 20, 55, and Appendix 3, page 2 in "Final Environmental Assessment - U.S. Fish and Wildlife Service Participation in a Partnership to Protect 'the Champion lands' in Essex County, Vermont"- May 1999).

B. If the Permitee chooses to not renew this Permit, the Permitee may:

(1) subject to the availability of funding, sell his or her camp to the Service at Market Value based on an appraisal conducted for the Service;

(2) request that the Service move his or her buildings off the Refuge to another site within 50 miles, provided the cost is less than the purchase value and such action is deemed by the Service to be fiscally and environmentally prudent, when compared to the purchase of the building by the Service at Market Value and the cost of site remediation following the termination of the Permit.

The Uniform Relocation Assistance and Real Property Acquisitions Policy Act will guide the Service procedures for acquiring camps on the Refuge. Information about these procedures is available upon request from the Refuge Manager. Upon termination or cancellation of this Permit, the Permitee agrees to vacate the

Premises in an orderly fashion, remove all personal property, and leave the Premises in a neat and orderly condition.

2. Payments.

A. Permitee will pay a fee of ($_____.00) Dollars, annually to U.S. Fish and Wildlife Service, Silvio O. Conte Refuge, Nulhegan Basin Division, 5396 Rt. 105, Brunswick, VT 05905, at the time of the signing of this Permit, and annually thereafter. Payment must be received on or before May 1 each year. Permitee shall pay the annual fee, in full, without demand. Payment shall be made by certified check or money order and shall be made out to: "U.S. Fish and Wildlife Service."

B. The Service reserves the right to increase/decrease the fee for the succeeding term or alter the terms of this Permit by providing the Permitee with written notice of the same at least forty-five (45) days prior to any annual renewal. Permit fee amounts will be determined based on market analysis of comparable camp leases in the area. Fee amounts will be analyzed through market analysis approximately every five years and readjusted if necessary. Fees received by the Service after May 1, will be deemed past due, and Permitee shall pay interest on a daily basis at a rate of 5 percent per year on amounts past due thirty (30) days or more. Failure to pay Permit fees for ninety (90) days or more beyond the due date shall constitute a breach and shall result in automatic termination of the Permit without further act or deed on the part of the Service or Permitee; upon such occurrence, the Service may take possession of the structures on the Premises (See Section 14 below).

3. Occupancy of the Camp.

By acceptance of this Permit, Permitee hereby warrants and represents that:

(a) the Premises shall be occupied and/or used by the Permitee and his or her guests for the sole purpose of noncommercial recreational use.

(b) the Permitee bears full responsibility for his or her guests, their use of the Premises, and their compliance with these Permit conditions. Violation of any of the permit conditions by the Permitee or their guests will be grounds for termination of the permit at the sole discretion of the Service.

(c) subletting of the Premises for fee or donation is prohibited.

(d) the Premises shall be occupied and/or used only in such manner and purpose that is in compliance with all applicable federal, state, or local laws, statutes, regulations, rules, or ordinances, including zoning ordinances and regulations, and

(e) the Premises shall NOT be used as a principal or year-round residence.

4. Use.

Subject to all conditions contained herein, Permitee will have the right to occupy and use the existing buildings and improvements (for purposes of this Permit, "improvements" will mean improvements to the Premises, including, but not limited to roads and paths). No additional structures, roads, or paths may be constructed. Permitee may not locate any trailers (excepting e.g., utility trailers, snowmobile trailers), busses, or campers on the Premises.

Permitee shall not build roads or driveways on the Premises or any other Refuge lands, nor have any public utility service installed.

Permitee will fully comply with all federal (including refuge-specific regulations), state, and local statutes, rules, and regulations controlling and regulating hunting, fishing, the use of firearms, the use of off-highway recreational vehicles including snowmobiles, and outdoor fires. Campfires (including cooking fires) will be permitted if they are contained and located in such manner as not to present a risk of fire escape. Such fires will not be permitted off the Premises, nor during bans on burning issued by the local Forest Fire Warden or other applicable authority, including the Refuge Manager. Open fires, including but not limited to the burning of brush, trash, or debris, are prohibited, except with prior written permission from the Refuge Manager and any other necessary permit (municipal, fire warden and/or state).

Permitee will use every precaution to prevent damage to the Premises by fire, vandalism, malicious mischief or otherwise and will take all reasonable action to suppress any fire and report any act of vandalism or mischief which may occur and immediately notify Refuge Manager of any fire or vandalism damage. The opening of any chimney will be equipped with an adequate spark arrester or screen with a mesh size no larger than one-half inch.

Permitee shall not cut or destroy any tree or shrub, including hazard trees, on the Premises (excepting firewood, see below) without obtaining prior specific written permission from the Refuge Manager.

Permitee will not pile brush resulting from any allowed cutting, but will reduce the brush to a reasonable size and spread it over a large area. Permitee shall not enlarge the area of open space on the Premises.

Cutting of firewood will be for the purpose of camp use only, and firewood shall not be removed from the Premises. Only trees downed by natural causes within or adjacent to the Premises, or those that have fallen as a result of natural means across a Refuge roadway, or other trees as specified by the Refuge Manager, may be cut for camp firewood. The importation of firewood can serve as a means of introducing several harmful insect species which can have a devastating effect on our forests. Two of the species of greatest concern are the Asian longhorned beetle and the Emerald ash borer. For this reason, only firewood from Essex, Caledonia, Orleans, Orange, and Washington Counties, Vermont, and Coos and Grafton Counties, New Hampshire, may be imported to the Refuge.

The soil of the Premises or any other Refuge lands may not be cultivated, except for small gardens, not to exceed 200 square feet, located within the Premises specifically for camp use. No exotic or invasive plants will be cultivated on the Premises or any other Refuge lands, except for garden vegetables and fruits (within the Premises only). Use of pesticides or herbicides in gardens, or elsewhere on or off the Premises, is prohibited.

Permitee shall keep the Premises neat and clean and shall dispose of all garbage, trash, and debris by removing all such material from the property and returning the same to its place of origin or depositing it in some municipal or other governmental approved solid waste disposal areas. Garbage, trash or any other wastes shall not be burned on the Premises without prior written permission from the Refuge Manager and any permits required by any governing local or state authority, and shall not be burned elsewhere on the Refuge, nor shall it be dumped into lakes, ponds, streams, or any lands of the Refuge. Permitee will comply with all applicable solid waste laws imposed by the State, Town, or Municipality.

If the use of the Premises by Permitee, guests, or invitees is of such a nature as to constitute a threat to public safety, a nuisance or annoyance to other Permitees, Refuge staff, or visitors, or causes, in the sound professional judgment of the Refuge Manager, a diminution in the value of other property in the vicinity, the Refuge Manager will have the right to demand that such use be abated, and may terminate this Permit for failure to comply with any such demand in the time specified by the Refuge Manager by serving written notice on Permitee.

With the exception of gasoline; diesel fuel; motor oil; engine, vehicular, and chainsaw lubricating fluids; antifreeze; heating fuels; bottled gas; insect repellents; and materials used in the routine operation and maintenance of the improvements on the Premises, in quantities reasonable for camp use, all of which must be stored in a safe manner in sealed, above-ground containers, Permitee may not store or allow to be stored on the Premises, or elsewhere on the Refuge, any hazardous material as defined by the U.S. Environmental Protection Agency. Permitee shall not dispose of, or allow the disposal of any hazardous substances, including those substances and materials specifically listed above, on the Premises or elsewhere on the Refuge. Permitee shall indemnify, defend, save and hold harmless the United States of America and the Service from all losses, claims, damages, environmental injuries, expenses, response costs, remediation expenses, allegations or judgments (including fines and/or penalties) arising out of the activities of the Permitee, its agents and contractors relating to or in any way connected with the presence or release of such hazardous material in or on the Premises. The said obligation to indemnify shall survive the termination or expiration of this Permit.

5. Sanitation.

Subject to the approval of the Refuge Manager, Permitee will provide proper disposal of septic (for the purposes of this Permit, "septic" will mean, but is not limited to, sewage, wash water, and slop water), and other waste in compliance with all applicable federal, state, and local laws and in a manner so as not to be

objectionable or detract from the aesthetic values of the general area. Permitee shall not discharge any untreated or partially-treated sewage or other waste materials directly or indirectly (e.g., through any ditches, gullies, or above-ground or below-ground piping, except as may be provided for below) into any stream or other body of water.

Properly planned and designed sanitary toilet facilities are required for all sites. Appropriate facilities include, but are not limited to, incinerator, chemical, compost, privy or sub-surface waste-water systems. Type, design, placement, and construction of any future toilet and sanitary facilities will be selected to minimize damage to Refuge air, lands, and water. Properly constructed privies (dug pit toilets) will be allowed provided they meet this requirement, conform to local and State requirements, and are located more than 100 feet from any stream or other water body.

All future construction of toilets and sanitary facilities including waste water disposal systems must be approved in advance in writing by the Refuge Manager, be built in accordance with all applicable codes, and be properly permitted and inspected by the governing local or state authority. It is the Permitee's responsibility, after securing written permission for construction from the Refuge Manager, to secure the proper permits and provide copies to the Refuge Manager, prior to any construction activity.

Permitee bears the responsibility for any noncompliance with all federal, state, and local laws and regulations governing septic and other waste disposal, and Permitee will indemnify, defend, save and hold the United States of America and the Service harmless from and against any and all actions, suits, damages, and claims by any party by reason of noncompliance with such laws and regulations. The said obligation to indemnify will include all costs and attorneys' fees and shall survive the termination of this permit.

6. Maintenance and Improvement.

This Permit allows use of existing structures and improvements only. No additional permanent structures may be constructed or installed. Permitee shall not enlarge the area of open space on the Premises. The Permitee may perform routine maintenance of buildings. For the purposes of this Permit, "routine maintenance" is defined as repairs made to any of the existing privately owned buildings on the Premises in order to sustain their intended useful purpose and to prolong their useful life expectancy, but shall not include substantial rebuilding or remodeling of any existing structure, except in the case of approved repairs in response to destruction of less than 80 percent of the structure(s) due to disaster. Driveway and road surfaces, bridges, culverts, and similar structures may not be modified, replaced, or rebuilt without prior written approval of the Refuge Manager. Driveways and road surfaces may not be enlarged or hard-surfaced. Mowing of camp lawns, pathways to outbuildings, and camp driveways is permitted.

No substantial improvements will be allowed. Examples of substantial improvements include, but are not limited to, expansion of cabin size, other permanent additions including storage sheds, porches or decks, and constructing, enlarging, or paving driveways and roads.

No rebuilding of any structure will be allowed in the event of a loss of 80 percent or more of the area of the structure due to fire, flood, earthquake or other disaster.

7. Access.

Permitee may access the Premises by the route existing at the time of the acquisition of the land by the Service, subject to the conditions set forth herein. However, the Service retains the right to restrict or deny vehicular access to the Premises if such access poses a risk to human safety, creates such an environmental risk that compatibility can no longer be ensured, could result in damage to refuge facilities such as roads, or otherwise materially conflicts with Refuge management needs.

Although the Service will maintain access for Permitees along with other refuge visitors on existing roads within its budget and capabilities, nothing herein shall imply any duty or obligation upon the Service to construct or maintain specific roads, paths, trails, culverts, or bridges to the Premises, that, in the sound professional judgment of the Refuge Manager, would solely or primarily benefit the Permitee. Any payment received by the Service is solely for the use of the subject Premises and does not provide the Permitee with the guarantee of any greater rights of access over Refuge property than is provided to the general public.

Road maintenance, including snow plowing, will be performed by the Service only as necessary for the Refuge's management operations and other administrative needs. Maintenance of any road or associated structure by the Service solely for the benefit of Permitee is not implied and should not under any circumstances be expected. However, if the Service ceases to maintain a road necessary for Permitee's access to the Premises, Permitee may maintain, at his own expense, said road with prior written permission from the Refuge Manager.

The Service retains the right to close, lock, or otherwise restrict vehicular (including snowmobile) access to the public, including Permitees, along, through or over roads, gates, bridges, or rights of way under its control at any time including but not limited to, the snowmobile and spring mud seasons, periods of high fire danger, when forestry operations, road, or other conditions make such access hazardous, or when such restrictions are necessary for refuge management purposes, in the professional judgment of the Refuge Manager. Permitees whose camps are not situated on a trail within the Vermont Association of Snow Travelers, Inc. (VAST) trail system must secure a separate SUP from the Refuge Manager to access their camps via snowmobile from the closest point on the nearest VAST trail or public highway, as approved in advance by the Refuge Manager. The Service advises that logging trucks always have the right of way. Permitees and their invitees, guests, employees or agents, must be alert at all times on any road for logging trucks and equipment as well as for possible road hazards such as fallen trees, limbs, and other road damage or washouts resulting from heavy rains, beaver flooding, damaged culverts or other causes.

Permitees shall under no circumstances close, lock, or otherwise restrict access along, through, or over existing roads, gates, or rights of way on Refuge lands, except for the gating of camp driveways, with prior permission of the Refuge Manager. No driveway gates will be installed without prior written consent of Refuge Manager and approval of the design and placement. Under no circumstances shall cables or chains be used to restrict access on camp driveways, or elsewhere on the Refuge. Permitees will provide a key or combination for any lock on an existing or new driveway gate to the Refuge Manager, upon request.

During any time that a gate used to control access to a camp blocks any Refuge road to vehicular travel due to closure of said gate, then the respective Permitees and their guests or invitees that use said gate and road to access their camp will be restricted to direct travel to and from the camp for purposes of ingress and egress only and shall not drive any motorized vehicle beyond the point necessary to access said camp.

8. Privacy and Security.

The Service reserves the right for itself and its agents and assigns (not including the general public), to pass freely over the Premises at any and all times, by foot or with vehicles necessary in the pursuit of Refuge operations and programs, during reasonable hours. Entry into buildings by the Service will only be allowed for law enforcement personnel in the event of executing a search warrant, or in the presence of the Permitee, for the inspection of interior building spaces to ensure compliance with the conditions of this Permit.

The Permitee may not take any actions to discourage legitimate (authorized by the Service) public access on Refuge lands. The Permitee will not have exclusive rights to any shoreline area or water surface area. However, the Refuge will publicize in their public use documents and guidance that Permitees' occupancy and use of the Premises should be treated with respect and that the Premises should be reasonably avoided by the public. The Permitee may not post signs at the boundaries of the Premises, or any gate, road, or driveway without the Refuge Manager's prior written permission and approval of the wording, construction, and placement of any signs. If refuge visitors, or others, cause any problems with authorized use of the Premises or the Permitee's property on the Premises, the Permitee should notify the Refuge Manager so that appropriate action may be taken by the Service.

Although Service law enforcement personnel may, as a by-product of their presence while performing their routine duties, deter thefts and break-ins, nothing herein shall imply any duty or obligation upon the Service to provide increased security services for the camps or their contents, beyond that which reasonably would be expected for the protection of the general visiting public.

9. Fiscal Liability.

Permitee agrees that all taxes, charges, assessments, and other impositions levied upon their buildings, improvements, and fixtures thereon shall be paid by the Permitee when due and payable.

10. Permitee's Liability for Damages.

Permitee will be responsible to the Service for any damages caused directly or indirectly by Permitee or his guest(s), invitees, employees, or agents, including, but not limited to, surface damages or damage to terrestrial or aquatic habitats or resources, interference or meddling with any tools, machinery, equipment, gates, buildings, signs, Refuge employees, or other Refuge visitors, on or off the Premises.

11. Permit Assignment.

Permitee understands and acknowledges the only interest in the Premises held by the Permitee is that of a Permit holder and that nothing in this agreement shall be construed to imply that the Permitee has any property interest in the Premises, other than ownership of the structures and personal property items thereon. Permitee has no authority, right or power to sell, convey, transfer, sublet, assign, give, devise or otherwise encumber the Premises, any portion of the Premises, or any structure on the Premises, except as otherwise permitted by this Permit or by the Service's prior written permission.

Permits are only issued to original lease holders (Champion International Corporation lease holders of record as of July 21, 1999) and may not be transferred to third parties. Should original lease holders wish to withdraw their interest, they may transfer it to others who were original lease holders on the same lease, but not to an outside party who was not a lease holder of record on July 21, 1999.

In the event that an individual original Permitee dies within the first twenty years after the July 21, 1999 purchase of the land by the Service, a transfer by inheritance of the original Permitee interest in the buildings will allow the heir(s) to become a Permit holder provided that such transfer shall be subject to all terms and conditions of this Permit. However, all transfers due to this inheritance clause during the first 20 years will terminate on July 21, 2019. For the purposes of this Permit, an "heir" is defined as a relative by blood, or as a relative otherwise may be specified by the laws of the state of Vermont. In order to designate an heir for the purposes of this Permit, a letter of such designation naming an heir must be sent to the office of the Nulhegan Basin Division of the Silvio O. Conte Refuge (address given under "Section 22. Notices" below) for inclusion in the appropriate camp file. Letters having designated an heir must be on file at the refuge office in advance of a Permitee's death. Issuance of a new Permit will be required upon transfer through inheritance. Any such transferred Permits will expire not later than July 21, 2019. After July 21, 2019, the interest of any deceased Permitee will lapse. The death of an original lease holder will not affect the Permit status of any surviving original lease holders of record for that camp.

12. Insurance.

The Permitee shall be required to acquire and maintain during the term of this Permit, Comprehensive General Liability insurance against claims occasioned by the actions or omissions of the Permitee, his/her agents, employees, invitees, and/or guests while engaged in the activities authorized hereunder. Such insurance shall be in a form and amount satisfactory to the Service and in an amount commensurate with the degree of risk and the scope of such activities authorized hereunder, but in any event not less than $300,000 per occurrence. All liability policies shall specify that the insurance company shall name the "United States of America" as an additional named insured and shall provide that the insurance company shall have no recourse against the Government for payment of any deductible, premium or assessment; or, alternatively, if the United States of America is not named as an additional insured, the liability policy shall specify that the insurance company shall have no right of subrogation against the United States, its agents, servants and employees and shall provide that the insurance company shall have no recourse against the Government for payment of any deductible, premium or assessment. A certificate of insurance indicating that the required insurance and specifications are in effect and the annual premium is paid in advance shall be provided by the Permitee to the Refuge Manager with the annual payment, or submitted at the time of policy renewal, and anytime within thirty (30) days of the Refuge Manager's request for such documents. The Permitee shall provide to the Refuge Manager thirty (30) days advance written notice of any material change in the Permitee's insurance coverage hereunder.

13. Liability.

Permitee assumes full control of the Premises "as is," and the Service makes no warranty as to the habitability or condition of the Premises. Permitee also will inform the Refuge Manager immediately of any personal injuries and/or property damage in excess of $500 suffered by any person on the Premises, and of all risks, hazards, and dangerous conditions of which Permitee becomes aware elsewhere on the Refuge. The Service shall not be liable to Permitee for any injury or harm to any person, including Permitee, occurring in or on the Premises or on any other lands of the Refuge or for any injury or damage to the Premises, to any property of the Permitee or to any property of any third entity.

In consideration of being permitted to engage in the activity authorized under this Permit at the Nulhegan Basin Division of the Silvio O. Conte National Fish and Wildlife Refuge, the Permitee, being of lawful age, for himself and his personal representatives, heirs, and next of kin, hereby releases, waives, and forever discharges the United States of America, its agents, and employees, all for the purposes herein referred to as, Releasees, from any and every claim, demand, action or right of action, of whatsoever kind or nature, either in law or in equity, arising from or by reason of any bodily injury or personal injuries known or unknown, death and/or property damage resulting or to result from any injury, which may occur while engaged in the permitted activity, and covenants not to sue the Releasees, for any loss or damages, and any claim or damage therefore, on account of injury to the person or property or resulting in death of the Permitee, whether caused by the negligence of Releasees or otherwise. Permitee agrees to indemnify, defend, save, and hold harmless the Releasees and each of them from any loss, liability, damage, or cost Releasees may incur due to the presence of Permitee in or upon the said property of the United States. Releasor agrees that this release and waiver are intended to be as broad and inclusive as permitted by the laws of the State of Vermont and that if any portion thereof is held invalid, it is agreed that the balance shall notwithstanding, continue in full legal force and effect. The said obligation to indemnify shall survive the termination or expiration of this Permit.

Permitee shall further indemnify the Service against all actions, suits, damages, and claims by whomever brought or made by reason of the nonobservance or nonperformance of:

(a) any obligation under this Permit; or
(b) any federal, state, local law or regulation.

14. Default.

Any of the following will constitute a default under this Permit:

(a) Permitee's failure to perform any obligation under this Permit or the violation of any term or condition of this Permit,

(b) the filing of any bankruptcy/insolvency petition by or against Permitee or if Permitee makes a general assignment for the benefit of creditors, or

(c) an execution or attachment issued against the Permit, the Premises, or Permitee's property on the Premises, unless Permitee provides the Refuge Manager with satisfactory assurances and evidence that such execution or attachment will be released within a reasonable time.

In the event of a default, the Permitee will have ninety (90) days following receipt of written notice from the Service to cure the default. If the default is not so cured, then the Service shall have all its remedies provided by law and hereunder, including terminating the Permit by written notice to the Permitee stating the reason for termination, and entering the Premises. The Service may take possession and retain Permitee's personal property that is on the Premises, including all structures, to secure the performance of any obligation under the Permit, subject to any right of any compensation which may be owed to the Permitee. The Service may, at its option, re-enter and take possession of the Premises after a default without releasing Permitee's obligation to perform under the Permit. Notwithstanding any provision to the contrary contained herein, the Service has the right, but not the obligation, to sell, remove, or destroy structures and improvements remaining on the Premises after Permitee has vacated or been evicted from the same. In the event of default and subsequent Permit termination, the Permitee has the ability to appeal the termination action as specified in Title 50 - Code of Federal Regulations - Section 25.45 "Appeals Procedures," available upon request from the Refuge Manager.

15. Security Agreement.

Permitee hereby grants the Service a security interest in all of Permitee's improvements, fixtures, and personal property to secure the obligations of the Permitee hereunder. Permitee hereby grants the Service the right to perfect this security agreement by taking possession of the secured property upon Permitee's default under this Permit.

16. Mechanic's Lien.

If any notice is filed at the county registry of deeds of a builder's, supplier's or mechanic's lien on the Premises, arising out of any work performed by or on behalf of Permitee, Permitee shall cause such lien to be discharged or released immediately and shall indemnify the Service against any such claim or lien, including all costs and attorneys' fees that the Service may incur in connection with the same.

17. Succession.

This Permit shall be binding upon the heirs, executors, administrators, successors in interest and assigns of the parties hereto.

18. Waiver.

Any consent, express or implied, by the Service to any breach by Permitee of any covenant or condition of this Permit shall not constitute a waiver by the Service of any prior or succeeding breach by Permitee of the same or any other covenant or condition of this Permit. Acceptance by the Service of any fee or other payment with knowledge of a breach or default by Permitee under any term of this Permit shall not constitute a waiver by the Service of such breach or default.

19. Savings Clause.

The invalidity or unenforceability of any provision of this Permit shall not affect or impair the validity of any other provision.

20. Rights and Benefits.

The rights and benefits conferred by this Permit shall be subject to the laws of the United States governing the Service and to the rules and regulations promulgated hereunder, whether now in force or hereafter enacted or promulgated.

21. Anti-deficiency Provision.

Nothing contained herein shall be construed as binding the Service to expend in any one fiscal year any sum in excess of appropriations made by Congress or administratively allocated for the purposes of this Permit for the fiscal year, or to involve the Service in any contract or other obligation for the further expenditure on money in excess of such appropriations or allocations.

22. Notices.

Any official notice regarding fiscal matters, including payment of the annual Permit fee, or the status of Permits or Permitees to be given to either party under provisions of, or with respect to, this Permit shall be given by certified, United States mail, and addressed to the U.S. Fish and Wildlife Service, Nulhegan Basin Division, Silvio O. Conte Refuge, 5396 Rt. 105, Brunswick, VT 05905 (by the primary contact only). Correspondence from the Refuge to the Permitee will be addressed to the primary contact only at the primary contact's address of record. Any notice will have been deemed given when so mailed. It will be the responsibility of the Permitee to promptly inform the above-referenced office of any change of address and phone number applicable to Permitee contacts.

All such written correspondence with regard to any and all references made herein to "Refuge Manager," including but not limited to, requests for permission and approvals, notification of troubles or damages, other matters of concern or question about the Premises, or clarification of or compliance with Permit conditions or Refuge regulations shall be given to: Refuge Manager, Silvio O. Conte Refuge, Nulhegan Basin Division, 5396 Rt. 105, Brunswick, VT 05905.

FWS Form 3-2319
02/06

FINDING OF APPROPRIATENESS OF A REFUGE USE

Refuge Name: Silvio O. Conte National Fish and Wildlife Refuge

Use: Research Conducted by Non-Service Personnel

This form is not required for wildlife-dependent recreational uses, take regulated by the State, or uses already described in a refuge CCP or step-down management plan approved after October 9, 1997.

Decision Criteria:	**YES**	**NO**
(a) Do we have jurisdiction over the use?	✔	
(b) Does the use comply with applicable laws and regulations (Federal, State, Tribal, and local)?	✔	
(c) Is the use consistent with applicable Executive orders and Department and Service policies?	✔	
(d) Is the use consistent with public safety?	✔	
(e) Is the use consistent with goals and objectives in an approved management plan or other document?	✔	
(f) Has an earlier documented analysis not denied the use or is this the first time the use has been proposed?	✔	
(g) Is the use manageable within available budget and staff?	✔	
(h) Will this be manageable in the future within existing resources?	✔	
(i) Does the use contribute to the public's understanding and appreciation of the refuge's natural or cultural resources, or is the use beneficial to the refuge's natural or cultural resources?	✔	
(j) Can the use be accommodated without impairing existing wildlife-dependent recreational uses or reducing the potential to provide quality (see section 1.6D, 603 FW 1, for description), compatible, wildlife-dependent recreation into the future?	✔	

Where we do not have jurisdiction over the use ["no" to (a)], there is no need to evaluate it further as we cannot control the use. Uses that are illegal, inconsistent with existing policy, or unsafe ["no" to (b), (c), or (d)] may not be found appropriate. If the answer is "no" to any of the other questions above, we will generally not allow the use.

If indicated, the refuge manager has consulted with State fish and wildlife agencies. Yes ✔ No ____.

When the refuge manager finds the use appropriate based on sound professional judgment, the refuge manager must justify the use in writing on an attached sheet and obtain the refuge supervisor's concurrence.

Based on an overall assessment of these factors, my summary conclusion is that the proposed use is:

Not Appropriate _____ **Appropriate** ✔

Refuge Manager: _____ Date: _____

If found to be **Not Appropriate**, the refuge supervisor does not need to sign concurrence if the use is a new use.

If an existing use is found **Not Appropriate** outside the CCP process, the refuge supervisor must sign concurrence.

If found to be **Appropriate**, the refuge supervisor must sign concurrence:

Refuge Supervisor: _____ Date: _____

A compatibility determination is required before the use may be allowed.

JUSTIFICATION FOR A FINDING OF APPROPRIATENESS OF A REFUGE USE

Refuge Name: Silvio O. Conte National Fish and Wildlife Refuge

Use: Research Conducted by Non-service Personnel

NARRATIVE:

Research by non-U.S. Fish and Wildlife Service (Service) personnel on the Silvio O. Conte National Fish and Wildlife Refuge (Conte Refuge) is conducted by academic institutions, Federal, State, and local agencies, non-governmental organizations, and qualified members of the general public. Only research that is relevant, applicable, and useful to the refuge or the National Wildlife Refuge System (Refuge System) would be allowed. The primary purpose of this use is to further our basic understanding of the refuge's biological and cultural resources, and to inform our management decisions that affect those resources. In many cases, research by non-Service personnel ensures the perception of unbiased and objective information gathering, which can be important when using the research to develop management recommendations for politically sensitive issues. Additionally, universities and other Federal and State partners can often access equipment and facilities unavailable to refuge staff for analysis of data or biological samples.

Research conducted by non-Service personnel would also help the refuge to better achieve the goals of the Comprehensive Conservation Plan (CCP) because the data would help evaluate objectives and strategies identified in the plan. In addition, allowing research supports one of the purposes for which Conte Refuge was established: "provide opportunities for scientific research, environmental education, and fish and wildlife oriented recreation and access to the extent compatible with the other purposes…"

The Service would encourage and prioritize research and management studies on refuge lands that would improve and strengthen natural resource management decisions. The refuge manager would particularly encourage research supporting approved refuge goals and objectives that clearly improves land management decisions related to Federal trust resources, helps evaluate or demonstrate state-of- the art techniques, and/or helps address or adapt refuge lands to climate and land use change impacts.

Refuge staff would also consider research for other purposes that may not be directly related to refuge-specific goals and objectives, but contribute to the broader enhancement, protection, use, preservation, and management of cultural resources and native populations of fish, wildlife, and plants, and their natural diversity within the Northeast region or Atlantic flyway. All research proposals must also comply with the Service's compatibility policy.

Evaluating and accepting or rejecting study proposals, as well as conditioning the special use permits (SUP) appropriately, would minimize the impacts of, and maximize the value of, such research. If a research project occurs during the refuge's hunting season, special precautions would be required and enforced to ensure the researchers' health and safety. If conducted according to refuge-specific stipulations set forth in an approved compatibility determination and in a project-specific SUP, this use would not affect the Service's ability to protect, conserve and manage wildlife and their habitats, nor would it impair existing wildlife-dependent recreational uses or reduce the potential to provide quality, compatible, wildlife-dependent recreation uses into the future.

Research therefore has been found appropriate because it is beneficial to the refuge's natural and cultural resources, is consistent with the goals and objectives of the CCP, and supports one of Conte Refuge's purposes.

This finding of appropriateness and the compatibility determination for this use was distributed for public comment for 90 days from August 18, 2015 to November 16, 2015 as part of the review of the Conte Refuge's draft CCP/EIS. Comments we received on this use were considered as we developed this final determination. A summary of comments received on the draft plan is included in appendix O of the final CCP/EIS. This finding will undergo another 30-day review with release of the final CCP/EIS.

COMPATIBILITY DETERMINATION

USE:

Research Conducted by Non-service Personnel

REFUGE NAME:

Silvio O. Conte National Fish and Wildlife Refuge (Conte Refuge)

DATE ESTABLISHED:

October 3, 1997

ESTABLISHING AND ACQUISITION AUTHORITY(IES):

- Silvio O. Conte National Fish and Wildlife Refuge Act (Public Law 102-212).
- Migratory Bird Conservation Act of 1929.
- Land and Water Conservation Fund Act of 1965.

REFUGE PURPOSE(S):

- To conserve, protect, and enhance the Connecticut River populations of Atlantic salmon, American shad, river herring, shortnose sturgeon, bald eagles, peregrine falcons, osprey, black ducks, and other native species of plants, fish, and wildlife.
- To conserve, protect, and enhance the natural diversity and abundance of plant, fish and wildlife species and the ecosystem upon which these species depend within the refuge.
- To protect species, listed as endangered or threatened, or identified as candidates for listing, pursuant to the Endangered Species Act of 1973 (ESA) as amended (16 U.S. 1531 et seq.).
- To restore and maintain the chemical, physical, and biological integrity of wetland and other waters within the refuge.
- To fulfill the international treaty obligations of the United States relating to fish and wildlife and wetlands.
- To provide opportunities for scientific research, environmental education, and fish and wildlife oriented recreation and access to the extent compatible with the other purposes stated in this section.

NATIONAL WILDLIFE REFUGE SYSTEM MISSION:

To administer a national network of lands and waters for the conservation, management, and where appropriate, restoration of the fish, wildlife, and plant resources and their habitats within the United States for the benefit of present and future generations of Americans.

DESCRIPTION OF USE:

(a) What is the use? Is it a priority public use?
This determination covers low impact research projects; namely, those projects with methods that only have a minimal potential to adversely impact cultural resources and native wildlife and plants.

This is not an all-inclusive list, but examples of the types of research that would be allowed include: mist-netting for banding or tagging birds, point count surveys, fish and amphibian tagging, electrofishing, radio-telemetry tracking, use of cameras and recorders, use of live or other passive traps, or non-destructive searches of nests, dens, or burrows.

Research activities allowed under this determination would not result in long-term, negative alterations to species' behavior (e.g. result in wildlife leaving previously occupied areas for long periods; modifying their habitat use; or, causing nest or young abandonment). No project would degrade wildlife habitat, including vegetation, soils, and water. Research associated activities that would not be allowed include, but are not limited to, those that would result in soil compaction or erosion, degrade water quality, remove or destroy vegetation, involve off-road vehicle use, collect and remove animals or whole native plants, cause public health or safety concerns, or result in conflicts with other compatible refuge uses.

Refuge support of research directly related to refuge goals and objectives may take the form of funding, in-kind services such as housing or use of other facilities, vehicles, boats, or equipment, direct staff assistance with the project in the form of data collection, provision of historical records, conducting of management treatments, or other assistance as appropriate.

Research conducted by non-Service personnel is not a priority public use of the National Wildlife Refuge System (Refuge System) under the National Wildlife Refuge System Administration Act of 1966 (16 U.S.C. 668dd-668ee), and the Refuge System Improvement Act of 1997 (Public Law 105-57).

(b) Where would the use be conducted?
This use will be allowed on all refuge divisions and units, including lands acquired in the future pursuant to the final comprehensive conservation plan (CCP). The location of the research will vary depending on the individual research project that is proposed. An individual research project is usually limited to a particular habitat type, plant, or wildlife species. On occasion, research projects will encompass an assemblage of habitat types, plants, or wildlife. The research location will be limited to those areas of the refuge that are absolutely necessary to conduct the research project. The refuge may limit areas available to research as necessary to ensure the protection of Federal trust resources, or to reduce conflict with other compatible refuge uses. The methods and routes of access to study locations will be identified by refuge staff.

(c) When would the use be conducted?
The timing of the research may depend entirely on the individual research project that is being conducted. Scientific research will be allowed to occur on the refuge throughout the year. An individual research project could be short-term in design, requiring only one or two visits over the course of a few days, or be a multiple year study that may require regular visits to the study site. The timing of each individual research project will be limited to the minimum required to complete the project. If a research project occurs during the refuge hunting season, special precautions will be required and enforced to ensure public health and safety. The refuge manager would approve the timing (e.g., project length, seasonality, time of day) of the research prior to the start of the project to minimize impacts to wildlife and habitats, ensure safety, and reduce conflicts with other compatible refuge uses.

(d) How would the use be conducted?
Research activities will depend entirely on the individual research project that is conducted. The objectives, methods, and approach of each research project will be carefully scrutinized by the refuge manager before it will be allowed on the refuge. Only low impact research activities, such as those listed under section (a) above, are covered under this determination.

Research projects must have a Service-approved study plan and protocol. A detailed research proposal that follows the refuge's study proposal guidelines (see attachment 1) is required from parties interested in conducting research on the refuge. Each research proposal request will be considered, and if determined appropriate and compatible, will be issued a special use permit (SUP) by the refuge manager that includes the stipulations in this determination. The refuge manager will use sound professional judgment and ensure that the request will have no considerable negative impacts to natural or cultural resources, or impact visitors, and does not violate refuge regulations. Before initiating a research project that involves federally listed endangered or threatened species, an interagency Section 7 consultation process should be completed.

If approved, multi-year research projects will be reviewed annually to ensure that they are meeting their intended design purposes, that reporting and communicating with refuge staff is occurring, and that projects continue to be consistent with the mission of the Refuge System and purposes for which the refuge was established.

If the refuge manager decides to deny, modify, or halt a specific research project, the refuge manager will explain the rationale and conclusions supporting their decision in writing. The denial or modification to an existing study will generally be based on evidence that the details of a particular research project may:

- Negatively impact native fish, wildlife, and habitats or cultural, archaeological, or historical resources.
- Detract from fulfilling the refuge's purposes or conflict with refuge goals and objectives.
- Raise public health or safety concerns.
- Conflict with other compatible refuge uses.
- Not be manageable within the refuge's available staff or budget time.
- Deviate from the approved study proposal such that impacts to refuge resources are more severe or extensive than originally anticipate.

(e) Why is this use being proposed?
Quality, scientific research, including inventory and monitoring projects, are an integral part of refuge operations and management. Thorough research provides critical information for establishing baseline information on refuge resources and evaluating management effects on wildlife and habitat. Research results will help inform, strengthen, and improve future refuge management decisions, as well as inform management decisions on other ownerships with Federal trust resources in the Connecticut River Watershed and possibly elsewhere in the Northeast Region. For example, past projects on the refuge have studied federally listed species, such as Canada lynx, Puritan tiger beetles, and northeastern bulrush, or other species of conservation concern, such rusty blackbirds and Canada warbler. Research projects may also include evaluating habitat management treatments and the associated wildlife community response, as well as, measures of impacts from public uses on refuge lands.

The refuge manager would particularly encourage research supporting approved refuge goals and objectives that clearly improves land management decisions related to Federal trust resources, helps evaluate or demonstrate state-of-the-art techniques, and/or helps address or adapt to climate and land use change impacts.

Finally, quality scientific research is encouraged because it would support one of the purposes for which Conte Refuge was established: "provide opportunities for scientific research, environmental education, and fish and wildlife oriented recreation and access to the extent compatible with the other purposes…"

AVAILABILITY OF RESOURCES:

The resources necessary to provide and administer this use are available within current and anticipated refuge budgets. The bulk of the cost for research is incurred in staff time to review research proposals, coordinate with researchers, and write SUPs. In some cases, a research project may only require 1 day of staff time to write a SUP. In other cases, a research project may take many weeks, as the refuge staff must coordinate with students and advisors and accompany researchers onsite visits. These responsibilities are accounted for in budget and staffing plans.

We estimate below the annual costs associated with the administration of this use.

Review proposals, coordinate with researchers (Refuge biologist):	$3,200
Review proposals, issue SUPs General coordination (Refuge manager)*:*	$2,100
Vehicle, equipment, housing maintenance (Maintenance worker):	$1,900
Total Annual Cost of Program:	**$7,200**

We do not anticipate charging fees.

ANTICIPATED IMPACTS OF THE USE:

The Service encourages quality research to further the understanding of natural resources. Research by non-Service personnel contributes to the availability of the best available scientific information to support refuge management decisions.

Disturbance to wildlife, vegetation, water, soils, or cultural resources could occur while researchers are accessing study sites on vehicles or by foot, or while they are engaged in their project. The presence of researchers could also indirectly disturb wildlife. Potential impacts include:

- Trampling, damage, and killing of vegetation from walking offtrail (Kuss 1986, Roovers et al. 2004, Hammitt and Cole 1998).
- Soil compaction, soil erosion, and changes in hydrology from hiking on and offtrail (Kuss 1986, Roovers et al. 2004).
- Disturbance to wildlife that causes shifts in habitat use, abandonment of habitat, increased energy demands on affected wildlife, changes in nesting and reproductive success, and singing behavior (Knight and Cole 1991, Miller et al. 1998, Shulz and Stock 1993, Gill et al. 1996, Arrese 1987, Gill et al. 2001).

Overall, we expect that these impacts would be negligible because of the low number of researchers and because, under this determination, only low impact projects would be allowed. As indicated under (a) above, low impact projects are those that would only minimally impact cultural resources or native wildlife and plants, and would not result in long-term, negative alterations to species' behavior, or their habitat, including vegetation, soils, and water. Research would only be conducted in approved locations and at approved times of day and times of season to minimize impacts to sensitive habitats and wildlife.

Animals may be temporarily disturbed during direct or remote observation, telemetry, capture (e.g., mist-netting), or banding. In very rare cases, direct injury or mortality could result as an unintended result of research activities. Mist-netting and banding, which are common research methods, can cause stress, especially when birds are captured, banded, and weighed. In very rare cases, birds have been injured or killed during mist netting, or killed when predators reach the netted birds before researchers. In a study of mist-netting and banding at 22 bird banding stations in the U.S. and Canada, Spotswood et al. (2012) found that the average rate of injury was very low (0.59 percent; mostly from damage to the wings, stress, cuts, or breaks) and the average rate of mortality was also very low (0.23 percent; mostly from stress and predation). Overall, they found that the likelihood of injury differed among species (e.g., heavier birds were more prone to incidents) and some species were more vulnerable to certain types of injuries. To minimize the potential for injuries, researchers should be properly trained (Fair et al. 2010, Spotswood et al. 2012) and look for signs of stress (e.g., lethargy, panting, raising feathers, closing eyes), wing strain, tangling, and predation (Spotswood et al. 2012). Impacts can also be minimized by considering the species to be captured, mesh size of net, time of day, time of year, weather, the number of birds that need to be captured, and the level of predation (Fair et al. 2010).

Barron et al. (2010) found that transmitters attached for research can also negatively impact bird species by affecting their behavior and ecology. The greatest impacts from transmitters were increased energy expenditure and decreased the likelihood of nesting. They also found that the method of transmitter attachment had an impact on the likelihood of injury or mortality, with anchored and implanted transmitters having the highest mortality due to the need for anesthesia. Collar and harness transmitters also had high mortality rates because they could cause birds to become entangled in vegetation. To minimize these risks, researchers can avoid anchored/implanted transmitters and use adjustable harnesses and collars with weak links that allow the device to detach if it becomes trapped in vegetation (Barron et al. 2010).

The U.S. Department of Agriculture's Animal Welfare Information Center maintains a website with resources to help minimize stress, injury, and mortality of wildlife in field studies at: *https://awic.nal.usda.gov/research-animals/wildlife-field-studies*. Recommendations relevant to refuge research projects would be followed. Included on this site are links to the following guidelines to help researchers limit their impacts on wildlife:

- The Ornithological Council's "Guideline to the Use of Wild Birds in Research" (Fair et al. 2010).

- The American Society of Mammologists, "Guidelines of the American Society of Mammologists for the Use of Wildlife Mammals in Research" (2011).
- American Fisheries Society, "Guidelines for the Use of Fishes Research" (2004).
- American Society of Ichthyologists and Herpetologists, "Guidelines for Use of Live Amphibians and Reptiles in Field Research" (2006).

Researchers may also inadvertently damage plants (e.g. via trampling or equipment use) during the research project. To minimize impacts, the SUP will outline how researchers are allowed to access their study sites and use equipment to minimize the potential for impacts to refuge vegetation, soils, and water. We would not allow the collection and removal, or permanent damage, of any native plants under this determination.

Overall, allowing well-designed, properly reviewed, low impact research to be conducted by non-Service personnel is likely to have very little negative impact on refuge wildlife populations and habitats. We anticipate research will only have negligible to minor impacts to refuge wildlife and habitats because it will only be carried out after the refuge approves a detailed project proposal and issues a SUP including the stipulations in this determination to ensure compatibility. These stipulations are designed to help ensure each project minimizes impacts to refuge cultural resources, wildlife, vegetation, soils, and water. We also anticipate only minimal impacts because Service staff will supervise this activity, and it will be conducted in accordance with refuge regulations. In the event of persistent disturbance to habitats or wildlife, the activity will be further restricted or discontinued. If the research project is conducted with professionalism and integrity, potential minor adverse impacts are likely to be outweighed by the body of knowledge contributed to our understanding of refuge resources and our management effects on those resources, as well as the opportunity to inform, strengthen, and improve future refuge management decisions.

PUBLIC REVIEW AND COMMENT:

A finding of appropriateness and this compatibility determination were distributed for public comment for 90 days from August 18, 2015 to November 16, 2015 as part of the review of the Silvio O. Conte Refuge's draft CCP/EIS. Comments we received on this use were considered as we developed this final determination. This determination will undergo another 30-day review with release of the final CCP/EIS. A summary of comments received on the draft plan is included in appendix O of the final CCP/EIS.

DETERMINATION (CHECK ONE BELOW):

_____ Use is not compatible

__X__ Use is compatible with the following stipulations

STIPULATIONS NECESSARY TO ENSURE COMPATIBILITY:

- Only low impact projects are covered under this determination. Low impact projects, as indicated under (a) above, are those that would only have a minimal potential to impact cultural resources and native wildlife and plants. No project should result in long-term negative alterations to species' behavior (e.g. result in wildlife leaving previously occupied areas for a long term; modifying their habitat use within their range; or, causing nest or young abandonment). No project should degrade wildlife habitat, including vegetation, soils, and water. Nest, dens, and burrows must not be harmed. No research activities should result in soil compaction or erosion, degrade water quality, remove or destroy vegetation, involve off-road vehicle use, or result in collection and removal of animals or whole native plants.
- Research would only be conducted in Service-approved locations, using approved modes of access, and conducted only after the timing, season, duration, numbers of researchers, and areas open and closed is approved. Sensitive wildlife habitat areas will be avoided unless sufficient protection, approved by the Service, is implemented to limit the area and/or resources potentially impacted by the proposed research.

- If a research project occurs during the refuge hunting season, special precautions will be required and enforced to ensure public health and safety, and otherwise reduce conflicts with other compatible refuge uses.

- The Service will require modifications to research activities, including temporarily closing areas, or changing methods, when warranted, to avoid harm to sensitive wildlife and habitat when unforeseen impacts arise.

- All researchers will be required to submit a detailed research proposal following the refuge's study proposal guidelines (Attachment 1) and Service Policy (FWS Refuge Manual Chapter 4 Section 6). The refuge must be given at least 45 days to review proposals before initiation of research. Proposals will include obligations for regular progress reports and a final summary document including all findings.

- The criteria for evaluating a research proposal, outlined in the "Description of Use" section (a) above, will be used when determining whether a proposed study will be approved on the refuge. Projects would be denied if they:

  * Negatively impact native fish, wildlife, and habitats or cultural, archaeological, or historical resources.

  * Detract from fulfilling the refuge's purposes or conflicts with refuge goals and objectives.

  * Cause public health or safety concerns.

  * Conflicts with other compatible refuge uses.

  * Are not manageable within the refuge's available staff or budget time.

- Proposals will be prioritized and approved based on need, benefit to refuge resources, and the level of refuge funding required. Service experts, State agencies, or academic experts may be asked to review and comment on proposals.

- If proposal is approved, a SUP will be issued. The SUP will contain this determination's stipulations as well as project-specific terms and conditions that the researcher(s) must follow relative to the activities planned (e.g., location, duration, seasonality, etc.).

- Researchers must comply with all state and Federal laws and follow all refuge rules and regulations. All necessary State and Federal permits must be obtained before starting research on the refuge (e.g., permits for capturing and banding birds). Any research involving federally listed species may require Section 7 consultation under the Endangered Species Act. Any research involving ground disturbance may require historic preservation consultation with the Regional Historic Preservation Officer and/or State Historic Preservation Officer.

- Researchers will mark any survey routes, plots, and points in as visually unobtrusive a manner as practical. No permanent markers or infrastructure can be left on the refuge.

- Researchers will use every precaution and not conduct activities that would cause damage to refuge property or present hazards or significant annoyances to other refuge visitors. Any damage should be reported immediately to the Refuge Manager

- Researchers must not litter, or start or use open fires on refuge lands.

- All research staff handling wildlife must be properly trained to minimize the potential for impacts to individual wildlife prior to initiating the project. In addition, a review of the U.S. Department of Agriculture's Animal Welfare Information Center website must be documented by the researcher with identification of practices that will be followed to help further minimize stress, injury, and mortality of wildlife. The website is reached at: *https://awic.nal.usda.gov/research-animals/wildlife-field-studies*.

- Researchers may not use any chemicals (e.g., herbicides to treat invasive plants) or hazardous materials without prior written consent of refuge manager (e.g., the type of chemical, timing of use, and rate of application). All activities will be consistent with Service policy and an approved refuge Pesticide Use Plan.

- Researchers will be required to take steps to ensure that invasive species and pathogens are not inadvertently introduced or transferred to the refuge and surrounding lands (e.g., cleaning equipment).

- Refuge staff will monitor research activities for potential impacts to the refuge. The refuge manager may determine that previously approved research and SUP be modified or terminated due to observed impacts that are more severe or extensive than originally anticipated. The refuge manager will also have the ability to cancel a SUP if the researcher is not in compliance with the stated conditions.

- Researchers must have the SUP in their possession when engaged in research activities and will present it to refuge officials and State and Federal law enforcement agents upon their request.

- Researchers will submit a final report to the refuge upon completion of their work. For long-term studies, interim progress reports may also be required. The refuge also expects that research findings will be published in peer-reviewed publications. The contribution of the refuge and the Service should be acknowledged in any publications. The SUP will identify a schedule for annual progress reports and the submission of a final report or scientific paper.

JUSTIFICATION:

The Service encourages quality, scientific research because it provides critical baseline information on Federal trust and other refuge resources and helps evaluate the management effects on those resources. Conducting research is also one of the purposes for establishing Conte Refuge. Research results will also help inform, strengthen, and improve future refuge management decisions, as well as inform management decisions on other ownerships in the Connecticut River Watershed and possibly elsewhere in the Northeast Region. Given the stipulations above, and given that only low impact research projects would be conducted under this determination, we do not anticipate this activity will have greater than minor impact on refuge resources. Impacts, if they occur, would be confined in area, duration, and magnitude, with no long-term consequences predicted. Therefore, research conducted by non-Service personnel on Conte Refuge will not materially interfere with or detract from the mission of the Refuge System or the purposes for which the refuge was established.

SIGNATURE:

Refuge Manager: _____ _____
(Signature) (Date)

CONCURRENCE:

Regional Chief: _____ _____
(Signature) (Date)

MANDATORY 10-YEAR RE-EVALUATION DATE: _____

LITERATURE CITED:

Arrese, P. 1987. Age, intrusion pressure and defense against floaters by territorial male Song Sparrows. Animal Behavior 35:773-784.

Fair, J., E. Paul, and J. Jones, Eds. 2010. Guidelines to the Use of Wild Birds in Research. Washington, D.C.: Ornithological Council.

Gill, J. A.,W.J. Sutherland, and A.R. Watkinson. 1996. A method to quantify the effects of human disturbance on animal populations. Journal of Applied Ecology 33:786-792.

Gutzwiller, K.J., R.T. Wiedenmann, K.L. Clements, and S.H. Anderson. 1994. Effects of human intrusion on song occurrence and singing consistence in subalpine birds. The Auk 111: 28–37.

Hammitt, W.E., and D.N. Cole. 1998. Wildlife Recreation: Ecology and Management (2nd edition). New York: John Wiley & Sons. 361p.

Knight, R.L., and D.N. Cole. 1991. Effects of recreational activity on wildlife in wildlands. Transactions of the 56th North American Wildlife and Natural Resources Conference pp.238-247.

Knight, R.L., and D.N. Cole. 1995. Wildlife responses to recreationists. Pages 51-69 in R.L. Knight and D.N. Cole, editors. Wildlife and recreationists: coexistence through management and research. Washington, DC., Island Press, 372 pp.

Miller, S.G., R.L. Knight, and C.K. Miller. 1998. Influence of recreational trails on breeding bird communities. Ecological Applications 8:162-169.

North American Banding Council. 2001. North American bander's manual. April 2001. Accessed May 2015 online at: *http://www.nabanding.net/other-publications/.*

Schultz, R.D., and M. Stock. 1993. Kentish plovers and tourist-competitors on sandy coasts? Wader Study Group Bulletin 68 (special issue): 83-92.

Spotswood, E.N., K.R. Goodman, J. Carlisle, R.L. Cormier, D.L. Humple, J. Rousseau, S.L. Guers, and G.G. Barton. 2012. How safe is mist netting? Evaluating the risk of injury and mortality to birds. Methods in Ecology and Evolution 3:29-38.

Attachment 1. Silvio O. Conte National Fish and Wildlife Refuge Study Proposal Guidelines

A study proposal is a justification and description of the work to be done, and includes cost and time requirements. Proposals must be specific enough to serve as "blueprints" for the investigative efforts. Step-by-step plans for the actual investigations must be spelled out in advance, with the level of detail commensurate with the cost and scope of the project and the needs of management. Please submit proposals electronically as a Microsoft Word document or hardcopy to the refuge manager.

The following list provides a general outline of first order headings/sections for study proposals.

- Cover Page.
- Table of Contents (for longer proposals).
- Abstract.
- Statement of Issue.
- Literature Summary.
- Objectives/Hypotheses.
- Study Area.
- Methods and Procedures.
- Quality Assurance/Quality Control.
- Specimen Collections.
- Deliverables.
- Special Requirements, Concerns, Necessary Permits.
- Literature Cited.
- Peer Review.
- Budget.
- Personnel and Qualifications.

Cover Page

The cover page must contain the following information:

- Title of Proposal.
- Current Date.
- Investigator(s): name, title, organizational affiliation, address, telephone and fax numbers and e-mail address of all investigators or cooperators.
- Proposed starting date.
- Estimated completion date.
- Total Funding Support Requested from the U.S. Fish and Wildlife Service.
- Signatures of Principal Investigator(s) and other appropriate institutional officials.

Abstract

The abstract should contain a short summary description of the proposed study, including reference to major points in the Statement of Issue, Objectives, and Methods and Procedures sections.

Statement of Issue

Provide a clear, precise summary of the problem to be addressed and the need for its solution. This section should include statements of the importance, justification, relevance, timeliness, generality, and contribution of the study. Describe how any products will be used, including any anticipated commercial use. What is the estimated probability of success of accomplishing the objective(s) within the proposed timeframe?

Literature Summary

This section should include a thorough but concise literature review of current and past research that pertains to the proposed research, especially any pertinent research conducted within the Connecticut River watershed, and specifically, on refuge units. A discussion of relevant legislation, policies, and refuge planning and management history, goals, and objectives should also be included.

Objectives/Hypotheses

A very specific indication of the proposed outcomes of the project should be stated as objectives or hypotheses to be tested. Project objectives should be measurable. Provide a brief summary of what information will be provided at the end of the study and how it will be used in relation to the problem. These statements should flow logically from the statement of issue and directly address the management problem.

Establish data quality objectives in terms of precision, accuracy, representativeness, completeness, and comparability as a means of describing how good the data need to be to meet the project's objectives.

Study Area

Provide a detailed description of the geographic area(s) to be studied and include a clear map delineating the proposed study area(s) and showing specific locations where work will occur.

Methods and Procedures

This section should describe as precisely as possible how the objectives will be met or how the hypotheses will be tested. Include detailed descriptions and justifications of the field and laboratory methodology, protocols, and instrumentation. Explain how each variable to be measured directly addresses the research objective/hypothesis. Describe the experimental design, population, sample size, and sampling approach (including procedures for sub-sampling). Summarize the statistical and other data analysis procedures to be used. List the response variables and tentative independent variables or covariates. Describe the experimental unit(s) for statistical analysis. Also include a detailed project time schedule that includes initiation, fieldwork, analysis, reporting, and completion dates.

Quality Assurance/Quality Control

Adequate quality assurance/quality control (QA/QC) procedures help insure that data and results are: credible and not an artifact of sampling or recording errors; of known quality; able to stand up to external scientific scrutiny; and accompanied by detailed method documentation. Describe the procedures to be used to insure that data meet defined standards of quality and program requirements, errors are controlled in the field, laboratory, and office, and data are properly handled, documented, and archived. Describe the various steps (e.g., personnel training, calibration of equipment, data verification and validation) that will be used to identify and eliminate errors introduced during data collection (including observer bias), handling, and computer entry. Identify the percentage of data that will be checked at each step.

Specimen Collections

Clearly describe the kind (species), numbers, sizes, and locations of animals, plants, rocks, minerals, or other natural objects to be sampled, captured, or collected. Identify the reasons for collecting, the intended use of all the specimens to be collected, and the proposed disposition of collected specimens. For those specimens to be permanently retained as voucher specimens, identify the parties responsible for cataloging, preservation, and storage and the proposed repository.

Deliverables

The proposal must indicate the number and specific format of hard and/or electronic media copies to be submitted for each deliverable. The number and format will reflect the needs of the refuge and the Refuge manager. Indicate how many months after the project is initiated (or the actual anticipated date) that each deliverable will be submitted. Deliverables are to be submitted or presented to the refuge manager.

Deliverables that are required are as follows:

Reports and Publications

Describe what reports will be prepared and the timing of reports. Types of reports required in fulfillment of natural and social science study contracts or agreements include:

(1) Progress report(s) (usually quarterly, semiannually, or annually): may be required
(2) Draft final and final report(s): always required

A final report must be submitted in addition to a thesis or dissertation (if applicable) and all other identified deliverables. Final and draft final reports should follow refuge guidelines (Attachment 1a).

In addition, investigators are encouraged to publish the findings of their investigations in refereed professional, scientific publications and present findings at conferences and symposia. The Refuge manager appreciates opportunities to review manuscripts in advance of publication.

Data Files

Provide descriptions of any spatial (Geographic Information Systems; GIS) and non-spatial data files that will be generated and submitted as part of the research. Non-spatial data must be entered onto Windows CD ROMs in Access or Excel. Spatial data, which includes GPS (Global Position System)-generated files, must be in a format compatible with the refuge's GIS system (ArcGIS 8 or 9, Arcview 3.3, or e00 format). All GIS data must be in UTM 19, NAD 83.

Metadata

For all non-spatial and spatial data sets or information products, documentation of information (metadata) describing the extent of data coverage and scale, the history of where, when, and why the data were collected, who collected the data, the methods used to collect, process, or modify/ transform the data, and a complete data dictionary must also be provided as final deliverables. Spatial metadata must conform to U.S. Fish and Wildlife Service (Federal Geographic Data Committee; FDGC) metadata standards.

Oral Presentations

Three types of oral briefings should be included: pre-study, annual, and closeout.

These briefings will be presented to refuge staff and other appropriate individuals and cooperators. In addition, investigators should conduct periodic informal briefings with refuge staff throughout the study whenever an opportunity arises. During each refuge visit, researchers should provide verbal updates on project progress. Frequent dialogue between researchers and refuge staff is an essential element of a successful research project.

Specimens and Associated Project Documentation

A report on collection activities, specimen disposition, and the data derived from collections, must be submitted to the refuge following refuge guidelines.

Other:

Researchers must provide the refuge manager with all of the following:

(1) Copies of field notes/ notebooks/ datasheets.

(2) Copies of raw data (in digital format), including GIS data, as well as analyzed data.

(3) Copies of all photos, slides (digital photos preferred), videos, and films.

(4) Copies of any reports, theses, dissertations, publications or other material (such as news articles). resulting from studies conducted on refuge.

(5) Detailed protocols used in study.

(6) Aerial photographs.

(7) Maps.

(8) Interpretive brochures and exhibits.

(9) Training sessions (where appropriate).

(10) Survey forms.

(11) Value-added software, software developed, and models.

Additional deliverables may be required of specific studies.

Special Requirements, Permits, and Concerns

Provide information on the following topics where applicable. Attach copies of any supporting documentation that will facilitate processing of your application.

Refuge Assistance

Describe any refuge assistance needed to complete the proposed study, such as use of equipment or facilities or assistance from refuge staff. It is important that all equipment, facilities, services, and logistical assistance expected to be provided by the Fish and Wildlife Service be specifically identified in this section so all parties are in clear agreement before the study begins.

Ground Disturbance

Describe the type, location, area, depth, number, and distribution of expected ground- disturbing activities, such as soil pits, cores, or stakes. Describe plans for site restoration of significantly affected areas.

Proposals that entail ground disturbance may require an archeological survey and special clearance prior to approval of the study. You can help reduce the extra time that may be required to process such a proposal by including identification of each ground disturbance area on a U.S. Geological Survey (USGS) 7.5-minute topographic map.

Site Marking and/or Animal Marking

Identify the type, amount, color, size, and placement of any flagging, tags, or other markers needed for site or individual resource (e.g., trees) identification and location. Identify the length of time it is needed and who will be responsible for removing it. Identify the type, color, placement of any tags placed on animals (see SUP for requirements on marking and handling of animals).

Access to Study Sites

Describe the proposed method and frequency of travel to and within the study site(s). Explain any need to enter restricted areas. Describe duration, location, and number of participants, and approximate dates of site visits.

Use of Mechanized and Other Equipment

Describe any vehicles, boats, field equipment, markers, or supply caches by type, number, and location. You should explain the need to use these materials and if or how long they are to be left in the field.

Safety

Describe any known potentially hazardous activities, such as electro-fishing, scuba diving, whitewater boating, aircraft use, wilderness travel, wildlife capture or handling, wildlife or immobilization.

Chemical Use

Identify chemicals and hazardous materials that you propose using within the refuge.

Indicate the purpose, method of application, and amount to be used. Describe plans for storage, transfer, and disposal of these materials and describe steps to remediate accidental releases into the environment. Attach copies of Material Safety Data Sheets.

Animal Welfare

If the study involves vertebrate animals, describe your protocol for any capture, holding, marking, tagging, tissue sampling, or other handling of these animals (including the training and qualifications of personnel relevant to animal handling and care). If your institutional animal welfare committee has reviewed your proposal, please include a photocopy of their recommendations. Describe alternatives considered, and outline procedures to be used to alleviate pain or distress. Include contingency plans to be implemented in the event of accidental injury to or death of the animal. Include state and Federal permits. Where appropriate, coordinate with and inform state natural resource agencies.

Literature Cited

List all reports and publications cited in the proposal.

Peer Review

Provide the names, titles, addresses, and telephone numbers of individuals with subject-area expertise who have reviewed the research proposal. If the reviewers are associated with the investigator's research institution or if the proposal was not reviewed, please provide the names, titles, addresses, and telephone numbers of three to five potential subject-area reviewers who are not associated with the investigator's institution. These individuals will be asked to provide reviews of the proposal, progress reports, and the draft final report.

Budget

The budget must reflect both funding and assistance that will be requested from the Fish and Wildlife Service and the cooperator's contributions on an identified periodic (usually annual) basis.

Personnel Costs

Identify salary charges for principal investigator(s), research assistant(s), technician(s), clerical support, and others. Indicate period of involvement (hours or months) and pay rate charged for services. Be sure to include adequate time for data analysis and report writing and editing.

Fringe Benefits

Itemize fringe benefit rates and costs.

Travel

Provide separate estimates for fieldwork and meetings. Indicate number of trips, destinations, estimated miles of travel, mileage rate, air fares, days on travel, and daily lodging and meals charges. Vehicle mileage rate cannot exceed standard government mileage rates. Charges for lodging and meals are not to exceed the maximum daily rates set for the locality by the Federal Government.

Equipment

Itemize all equipment to be purchased or rented and provide a brief justification for each item costing more than $1,000. Be sure to include any computer-related costs. For proposals funded under Service agreement or contract, the refuge reserves the right to transfer the title of purchased equipment with unit cost of $1,000 or more to the Federal Government following completion of the study. These items should be included as deliverables.

Supplies and Materials

Purchases and rentals under $1,000 should be itemized as much as is reasonable.

Subcontract or Consultant Charges

All such work must be supported by a subcontractor's proposal also in accordance with these guidelines.

Specimen Collections

Identify funding requirements for the cataloging, preservation, storage, and analyses of any collected specimens that will be permanently retained.

Printing and Copying

Include costs for preparing and printing the required number of copies of progress reports, the draft final report, and the final report. In general, a minimum of two (2) copies of progress reports (usually due quarterly, semiannually, or as specified in agreement), the draft final report, and the final report are required.

Indirect Charges

Identify the indirect cost (overhead) rate and charges and the budget items to which the rate is applicable.

Cooperator's Contributions

Show any contributing share of direct or indirect costs, facilities, and equipment by the cooperating research institution.

Outside Funding

List any outside funding sources and amounts.

Personnel and Qualifications

List the personnel who will work on the project and indicate their qualifications, experience, and pertinent publications. Identify the responsibilities of each individual and the amount of time each will devote. A full vita or resume for each principal investigator and any consultants should be included here.

Attachment 1a. Interim Final Report Guidelines

Draft final and final reports should follow Journal of Wildlife Management format and should include the following sections:

Title Page
Abstract
Introduction/Problem statement
Study Area
Methods (including statistical analyses)
Results
Discussion
Management Implications
Management Recommendations
Literature Cited

FWS Form 3-2319
02/06

FINDING OF APPROPRIATENESS OF A REFUGE USE

Refuge Name: Silvio O. Conte National Fish and Wildlife Refuge

Use: Recreational Gathering of Blueberries, Blackberries, Strawberries, Raspberries, Mushrooms, Fiddleheads, and Antler Sheds

This form is not required for wildlife-dependent recreational uses, take regulated by the State, or uses already described in a refuge CCP or step-down management plan approved after October 9, 1997.

Decision Criteria:	**YES**	**NO**
(a) Do we have jurisdiction over the use?	✔	
(b) Does the use comply with applicable laws and regulations (Federal, State, Tribal, and local)?	✔	
(c) Is the use consistent with applicable Executive orders and Department and Service policies?	✔	
(d) Is the use consistent with public safety?	✔	
(e) Is the use consistent with goals and objectives in an approved management plan or other document?	✔	
(f) Has an earlier documented analysis not denied the use or is this the first time the use has been proposed?	✔	
(g) Is the use manageable within available budget and staff?	✔	
(h) Will this be manageable in the future within existing resources?	✔	
(i) Does the use contribute to the public's understanding and appreciation of the refuge's natural or cultural resources, or is the use beneficial to the refuge's natural or cultural resources?	✔	
(j) Can the use be accommodated without impairing existing wildlife-dependent recreational uses or reducing the potential to provide quality (see section 1.6D, 603 FW 1, for description), compatible, wildlife-dependent recreation into the future?	✔	

Where we do not have jurisdiction over the use ["no" to (a)], there is no need to evaluate it further as we cannot control the use. Uses that are illegal, inconsistent with existing policy, or unsafe ["no" to (b), (c), or (d)] may not be found appropriate. If the answer is "no" to any of the other questions above, we will generally not allow the use.

If indicated, the refuge manager has consulted with State fish and wildlife agencies. Yes___✔___No ____.

When the refuge manager finds the use appropriate based on sound professional judgment, the refuge manager must justify the use in writing on an attached sheet and obtain the refuge supervisor's concurrence.

Based on an overall assessment of these factors, my summary conclusion is that the proposed use is:

Not Appropriate _____ **Appropriate** ___✔___

Refuge Manager: _____ Date:_____

If found to be **Not Appropriate**, the refuge supervisor does not need to sign concurrence if the use is a new use.

If an existing use is found **Not Appropriate** outside the CCP process, the refuge supervisor must sign concurrence.

If found to be **Appropriate**, the refuge supervisor must sign concurrence:

Refuge Supervisor: _____ Date: _____

A compatibility determination is required before the use may be allowed.

603 FW 1
Exhibit 1
Page 2

JUSTIFICATION FOR A FINDING OF APPROPRIATENESS OF A REFUGE USE

Refuge Name: Silvio O. Conte National Fish and Wildlife Refuge

Use: Recreational Gathering of Blueberries, Blackberries, Strawberries, Raspberries, Mushrooms, Fiddleheads, and Antler Sheds

NARRATIVE:

Federal regulations (50 CFR 27.51(a) and 27.21) prohibit the destruction or collection of plants and the taking of plants or animals (except as allowed by regulated hunting) on national wildlife refuges. However, picking and gathering blueberries, raspberries, blackberries, and mushrooms involves the removal of fruiting bodies only and does not harm the plants, which are left in place. Similarly, the removal of fiddleheads involves removing only some of the fronds as they sprout, similar to harvesting asparagus. Again, the plant itself is not destroyed or collected. Antler sheds are a discarded animal part; collecting these does not harm the deer or moose that have shed them. This use specifically does not include recreational gathering of cranberries since they occur in wetlands due to potential impacts to wetland vegetation (our highest priority habitat).

The gathering of berries, mushrooms, fiddleheads, and antler sheds are historic uses of Silvio O. Conte National Fish and Wildlife Refuge (refuge) and have occurred continuously on refuge lands for decades. These uses are not priority public uses of the National Wildlife Refuge System (Refuge System), as defined by the Refuge System Improvement Act of 1997 (Public Law 105-57). However, the gathering of these materials can foster a connection to, and appreciation for, the area's natural resources, and they often occur concurrently with other public uses, including priority public uses. Current levels of these uses are low and we are not aware of any conflicts with other public uses or negative effects on refuge resources from these uses. This use only allows the collection of parts of plants and animals, such as berries and antler sheds, and not the collection of entire plants or wildlife.

We have determined that continuing to allow these uses is consistent with the U.S. Fish and Wildlife Service's policy on the appropriateness of refuge uses (603 FW 1).

This finding of appropriateness and the compatibility determination for this use was distributed for public comment for 90 days from August 18, 2015 to November 16, 2015 as part of the review of the Silvio O. Conte Refuge's draft CCP/EIS. Comments we received on this use were considered as we developed this final determination. A summary of comments received on the draft plan is included in appendix O of the final CCP/EIS. This finding will undergo another 30-day review with release of the final CCP/EIS.

COMPATIBILITY DETERMINATION

USE:

Recreational Gathering of Blueberries, Blackberries, Strawberries, Raspberries, Mushrooms, Fiddleheads, and Antler Sheds

REFUGE NAME:

Silvio O. Conte National Fish and Wildlife Refuge (Conte Refuge)

DATE ESTABLISHED:

October 3, 1997

ESTABLISHING AND ACQUISITION AUTHORITY(IES):

- Silvio O. Conte National Fish and Wildlife Refuge Act (Public Law 102-212).
- Migratory Bird Conservation Act of 1929.
- Land and Water Conservation Fund Act of 1965.

REFUGE PURPOSE(S):

- To conserve, protect, and enhance the Connecticut River populations of Atlantic salmon, American shad, river herring, shortnose sturgeon, bald eagles, peregrine falcons, osprey, black ducks, and other native species of plants, fish, and wildlife.
- To conserve, protect, and enhance the natural diversity and abundance of plant, fish and wildlife species and the ecosystem upon which these species depend within the refuge.
- To protect species, listed as endangered or threatened, or identified as candidates for listing, pursuant to the Endangered Species Act of 1973 (ESA) as amended (16 U.S. 1531 et seq.).
- To restore and maintain the chemical, physical, and biological integrity of wetland and other waters within the refuge.
- To fulfill the international treaty obligations of the United States relating to fish and wildlife and wetlands.
- To provide opportunities for scientific research, environmental education, and fish and wildlife oriented recreation and access to the extent compatible with the other purposes stated in this section.

NATIONAL WILDLIFE REFUGE SYSTEM MISSION:

To administer a national network of lands and waters for the conservation, management, and where appropriate, restoration of the fish, wildlife, and plant resources and their habitats within the United States for the benefit of present and future generations of Americans.

DESCRIPTION OF USE:

(a) What is the use? Is it a priority public use?
The use is recreational gathering of blueberries, blackberries, strawberries, raspberries, mushrooms, fiddleheads, and antler sheds. This use specifically does not include recreational gathering of cranberries since they occur in wetlands due to potential impacts to wetland vegetation (our highest priority habitat). The berries, mushrooms, fiddleheads, and antlers collect must be for personal use only, and not for commercial

sale. It is not a priority public use of the National Wildlife Refuge System (Refuge System), under the National Wildlife Refuge System Administration Act of 1966 (16 U.S.C. 668dd-668ee), as amended by the National Wildlife Refuge System Improvement Act of 1997.

(b) Where would the use be conducted?
These activities would take place on all refuge divisions open to public uses, including lands acquired in the future pursuant to the final comprehensive conservation plan (e.g., McConnell Pond tract at Nulhegan Basin Division, or any of the conservation focus areas).

(c) When would the use be conducted?
Visitors may collect these materials whenever they are seasonally available. All refuge units are open to this use daily from one-half hour before sunrise to one-half hour after sunset, with the following exceptions:

- The Third Island Unit (Deerfield, MA) is seasonally closed (January 1 through July 31) to protect nesting bald eagles.
- Both the Dead Man's Swamp (Cromwell, CT) and the Wissatinnewag Units (Greenfield, MA) are closed to the public at all times to protect sensitive resources.
- The Mount Tom Unit (Holyoke, MA) is currently closed due to public safety and vandalism concerns.

(d) How would the use be conducted?
We are proposing to open refuge lands to recreational gathering of natural materials for personal use. The gathering of these materials is a use of the area and fosters a connection to, and appreciation for, the area's natural resources. We recognize that picking and gathering blueberries, blackberries, strawberries, raspberries, mushrooms, fiddleheads, and antler sheds has occurred on the refuge for many years. Current levels of this use are low and this use often occurs concurrently with other public uses, including priority public uses.

Natural materials gathered on the refuge are for private use only; the exact quantities are described below under "Stipulations Necessary to Ensure Compatibility." Any sale of these materials would be considered a commercial use of these materials and is prohibited by Federal law. This use specifically does not include recreational gathering of cranberries because they occur in wetlands and their harvesting poses potential impacts to wetland vegetation (our highest priority habitat).

At the discretion of the refuge manager, some areas may be seasonally, temporarily, or permanently closed to gathering of natural materials if wildlife or habitat impacts, or if user conflicts become an issue. Furthermore, the refuge manager may modify daily and yearly limits of natural materials to be collected. No plants may be introduced or transplanted on refuge lands to promote recreational gathering of berries and no whole plants are to be removed from the refuge.

(e) Why is this use being proposed?
The use is being proposed by the refuge to accommodate a requested use of the area. Gathering of these natural materials has occurred in the area for many years.

AVAILABILITY OF RESOURCES:

The resources necessary to provide and administer this use are available within current and anticipated refuge budgets. Staff time associated with the administration of this use is primarily related to answering general questions from the public and monitoring impacts of the use on refuge resources. This activity is administered by the refuge staff who assess interactions among user groups and any related user impacts. Resource impacts will be monitored by refuge staff, under the supervision of the Refuge Manager. The use of refuge staff to monitor the impacts of public uses on refuge resources, and visitors is required for administering all refuge public uses. Therefore, these responsibilities and related equipment are accounted for in budget and staffing plans.

We estimate below the annual costs associated with the administration of this use.

Supplies and materials: (This includes in-house brochure production)	$300
Monitoring resource impacts:	$1,400
Law enforcement:	$2,000
Total Annual Cost of Program:	**$3,700**

We do not anticipate charging fees for this use.

ANTICIPATED IMPACTS OF THE USE:

The gathering of natural materials would have impacts to refuge resources that are similar to those discussed in the compatibility determination for wildlife observation, photography, environmental education, and interpretation. In general, visitors engaged in these uses would be traveling by foot, either by walking or hiking, in designated areas and along designated trails and roads. Visitors would likely engage in gathering natural resources while participating in priority public uses on the refuge. Engaging in priority public uses provides visitors with a better appreciation for and more complete understanding of the wildlife and habitats associated with the refuge. This can translate into more widespread and stronger support for the refuge, the Refuge System, and the U.S. Fish and Wildlife Service (Service), as well as wildlife conservation in general.

The negative impacts of this use include impacts to plants, soils, hydrology, and wildlife from visitors walking and hiking on the refuge, we have described these impacts below; however, because most visitors gathering natural materials are also participating in other compatible public uses, we do not expect pedestrian impacts associated with this use to be additive.

Vegetation Impacts:

Pedestrian travel can have indirect impacts to plants by compacting soils and diminishing soil porosity, aeration, and nutrient availability that affect plant growth and survival (Kuss 1986). Hammitt and Cole (1998) note that compaction limits the ability of plants to re-vegetate affected areas. Repeated foot travel can directly impact plants by crushing the plants themselves. Rare plants with limited site occurrence are particularly susceptible to such impacts. Plants growing in wet or moist soils are the most sensitive to disturbance from trampling effects (Kuss 1986). Moist and wet soil conditions are present at the refuge, particularly during spring and early summer. To minimize impacts to sensitive wetland plants, we would not allow the gathering of cranberries and discourage visitors from walking through wetland areas.

It is anticipated that allowing this use would cause vegetation loss on designated routes. Foot travel may increase root exposure and trampling effects; however, it is anticipated that under current levels of use the incidence of these problems would be minor. Designated routes for pedestrian travel consist of existing trails, many with hardened surfaces or are existing trails that have been used for many years. Designated routes do not have any known occurrences of rare plant species on their surface that would be impacted by this use. Continuing pedestrian travel on these routes is not likely to cause any significant impacts to plants or plant communities. There may also be limited amounts off-trail pedestrian use associated with recreational gathering. However, we do not anticipate that impacts to vegetation from off-trail use would be greater than negligible because it would be dispersed and occur at low levels. We also encourage visitors to stay on designated roads and trails, and expect most recreational gathering will occur nearby to trails and roads.

People can be vectors for invasive plants when seeds or other propagules are moved from one area to another. Once established, invasives can out-compete native plants, thereby altering habitats and indirectly impacting wildlife. The threat of invasive plant establishment would always be an issue requiring annual monitoring, and when necessary, treatment. Staff would work to educate the visiting public to reduce introductions and would also monitor and control invasives plants and other species.

Soils Impacts:

Soils can be compacted and eroded as a result of continued use of pedestrian routes (Cole and Landres 1995). It is anticipated that some soil erosion would occur as a result of continuing pedestrian access on designated

routes and some limited off-trail use. Under current and anticipated levels of use, impacts to soils (erosion, compaction) are not likely to be significant.

Hydrologic Impacts:

Roads and trails can affect the hydrology of an area, primarily through alteration of drainage patterns. It is anticipated that existing roads and trails would continue to influence hydrology regardless of pedestrian travel. Maintenance would be required to create adequate and proper drainage to avoid hydrologic impacts. Trail construction may also cause erosion and run-off of sediment into nearby waterways from exposed soils. To minimize these impacts, we would properly site trails, encourage visitors to stay on designated roads and trails, and discourage visitors from walking through sensitive wetland areas.

Wildlife Impacts:

Disturbances vary with the wildlife species involved and the type, level, frequency, duration and the time of year such activities occur. The responses of wildlife to human activities includes: avoidance or departure from the site (Owen 1973, Burger 1981, Kaiser and Fritzell 1984, Korschen et al. 1985, Henson and Grant 1991, Kahl 1991, Klein 1993, Whittaker and Knight 1998), use of sub-optimal habitat (Erwin 1980, Williams and Forbes 1980), altered behavior or habituation to human disturbance (Burger 1981, Korschen et al. 1985, Morton et al. 1989, Ward and Stehn 1989, Havera et al. 1992, Klein 1993), attraction (Whittaker and Knight 1998), and an increase in energy expenditure (Morton et al. 1989, Belanger and Bedard 1990). Knight and Cole (1991) suggest recreational activities occurring simultaneously may have a combined negative impact on wildlife. Hammitt and Cole (1998) conclude that the frequent presence of humans in wildland areas can dramatically change the normal behavior of wildlife mostly through "unintentional harassment." These responses can have negative impacts to wildlife such as mammals becoming habituated to humans making them easier targets for hunters. Human induced avoidance by wildlife can prevent animals from using otherwise suitable habitat.

Seasonal sensitivities can compound the effect of disturbance on wildlife. Examples include regularly flushing birds during nesting or causing mammals to flee during winter months, thereby consuming large amounts of stored fat reserves. Hammitt and Cole (1998) noted that females with young (such as white-tailed deer) are more likely to flee from a disturbance than those without young. Some uses, such as bird observation, are directly focused on viewing certain wildlife species and can cause more significant impacts during the breeding season and winter months.

Trails can disturb wildlife outside the immediate trail corridor (Trails and Wildlife Task Force 1998, Miller et al. 2001). Miller et al. (1998) found bird abundance and nesting activities (including nest success) increased as distance from a recreational trail increased in both grassland and forested habitats. Bird communities in this study were apparently affected by the presence of recreational trails, where "generalists" (e.g., American robins (*Turdus migratorius*)) were found near trails and "specialist" species (e.g., grasshopper sparrows (*Ammodramus savannarum*)) were found farther from trails. Nest predation was also found to be greater near trails (Miller et al. 1998).

Visitors engaged in this use have the potential to impact shorebird, waterfowl, and other migratory bird populations feeding and resting near the trails during certain times of the year. Human disturbance to migratory birds has been documented in many studies in different locations. Conflicts arise when migratory birds and humans are present in the same areas (Boyle and Samson 1985). McNeil et al. (1992) found that many waterfowl species avoid disturbance by feeding at night instead of during the day. Flight in response to disturbance can lower nesting productivity and cause disease and death.

Studying the effects of human visitation on waterbirds at J.N. "Ding" Darling Refuge, Klein (1989) found resident waterbirds to be less sensitive to disturbance than migrants; she also found that sensitivity varied according to species and individuals within species. Herons and bitterns were quite tolerant of people; however, the presence of people did disturb these birds when hunting terrestrial prey. Great blue herons (*Ardea herodias*), tricolored herons (*Egretta tricolor*), great egrets (*Casmerodius albus*), and little blue herons (*E. caerulea*) were disturbed to the point of flight more than other birds. Kushlan (1978) found that the need of these birds to move frequently while feeding may disrupt interspecific and intraspecific relationships. In addition, Batten (1977) and Burger (1981) found that wading birds were extremely sensitive to disturbance in the Northeastern United States.

Klein (1993), in studying waterbird response to human disturbance, found that as intensity of disturbance increased, avoidance response by the birds increased and that out-of-vehicle activity to be more disruptive than vehicular traffic; Freddy et al. (1986) and Vaske et al. (1983) also found the latter to be true. In regards to waterfowl, Klein (1989) found migratory dabbling ducks to be the most sensitive to disturbance and migrant ducks to be more sensitive when they first arrived in the late fall, than later in winter. She also found gulls and sandpipers to be apparently insensitive to human disturbance, with Burger (1981) finding the same to be true for various gull species.

For songbirds, Gutzwiller et al. (1994) found that singing behavior of some species was altered by low levels of human intrusion. Some studies have found that some bird species habituate to repeated intrusion; frequently disturbed individuals of some species have been found to vocalize more aggressively, have higher body masses, or tend to remain in place longer (Cairns and McLaren 1980). Disturbance may affect the reproductive fitness of males by hampering territory defense, male attraction, and other reproductive functions of song (Arcese 1987). Disturbance, which leads to reduced singing activity, would make males rely more heavily on physical deterrents in defending territories which are time and energy consuming (Ewald and Carpenter 1978).

Several studies have examined the effects of recreationists on birds using shallow-water habitats adjacent to trails and roads in the Eastern United States (Burger 1981, Burger 1986, Klein 1993, Burger et al. 1995, Klein et al. 1995, Rodgers and Smith 1995, 1997, Burger and Gochfeld 1998). Overall, the existing research clearly demonstrates that disturbance from recreation activities always have at least temporary effects on the behavior and movement of birds within a habitat or localized area (Burger 1981, 1986, Klein 1993, Burger et al. 1995, Klein et al. 1995, Rodgers and Smith 1997, Burger and Gochfeld 1998). The findings that were reported in these studies are summarized as follows in terms of visitor activity and avian response to disturbance.

Presence: Birds avoided places where people were present and when visitor activity was high (Burger 1981, Klein et al. 1995, Burger and Gochfeld 1998).

Distance: Disturbance increased with decreased distance between visitors and species (Burger 1986), though exact measurements were not reported.

Approach Angle: Visitors directly approaching birds on foot caused more disturbance than visitors driving by in vehicles, stopping vehicles near birds, and stopping vehicles and getting out without approaching birds (Klein 1993). Direct approaches may also cause greater disturbance than tangential approaches to birds (Burger and Gochfeld 1981, Burger et al. 1995, Knight and Cole 1995, Rodgers and Smith 1995, 1997).

Type and Speed of Activity: Joggers and landscapers caused birds to flush more than fishermen, clammers, sunbathers, and some pedestrians, possibly because the former groups move quickly (joggers) or create more noise (landscapers). The latter groups tend to move more slowly or stay in one place for longer periods, and thus birds likely perceive these activities as less threatening (Burger 1981, 1986, Burger et al. 1995, Knight and Cole 1995). Alternatively, birds may tolerate passing by with unabated speed whereas if the activity stops or slacks birds may flush (Burger et al. 1995).

Noise: Noise caused by visitors resulted in increased levels of disturbance (Burger 1986, Klein 1993, Burger and Gochfeld 1998), though noise was not correlated with visitor group size (Burger and Gochfeld 1998).

There are several known federally listed threatened or endangered species occurring on refuge lands or lands proposed for refuge acquisition. Where necessary, we will close sensitive areas to protect these species. For example, the Dead Man's Swamp Unit is closed to protect the federally listed puritan tiger beetle. Therefore, this activity is not expected to affect any threatened or endangered species. Disturbance to other species is expected to be negligible. Trail use may discourage use of habitat by nesting birds very close to the trails, but the area impacted by trails is small compared to the area available to wildlife away from any trail. Although some off-trail use occurs on the refuge, visitors are encouraged to stay on designated trails and roads.

PUBLIC REVIEW AND COMMENT:

A finding of appropriateness and this compatibility determination were distributed for public comment for 90 days from August 18, 2015 to November 16, 2015 as part of the review of the Silvio O. Conte Refuge's draft CCP/EIS. Comments we received on this use were considered as we developed this final determination. This determination will undergo another 30-day review with release of the final CCP/EIS. A summary of comments received on the draft plan is included in appendix O of the final CCP/EIS.

DETERMINATION (CHECK ONE BELOW):

_____Use is not compatible

__X____Use is compatible, with the following stipulations

Stipulations Necessary to Ensure Compatibility:

- The daily limit of blueberries, blackberries, raspberries, and strawberries shall be 1 quart per person per day.
- The daily limit of fiddleheads and mushrooms shall be one-half pound (8 ounces) per person per day.
- The annual limit of antlers shall be one pair of deer antlers and one pair of moose antlers per person (a pair includes: a matching pair; an unmatched right-left pair; two right antlers, or two left antlers).
- No whole plants will be collected or removed from the refuge.
- Ground disturbance will be minimized in the collection of mushrooms; only above-ground parts may be removed.
- A Federal wildlife officer will help to promote compliance with refuge regulations, monitor public use patterns and public safety, and document visitor interactions.
- Recreational gathering of cranberries will not be allowed due to potential impacts to wetland vegetation.

JUSTIFICATION:

Harvest of these natural materials within the Conte Refuge will not materially interfere with or detract from the mission of the Refuge System or the purposes for which the refuge was established. Providing the opportunity for recreational gathering of natural materials on the refuge provides visitors with an opportunity to observe wildlife and to view Service wildlife habitat management projects. Also, we do not anticipate any greater than negligible impacts to refuge resources from this use.

SIGNATURE:

Refuge Manager: _____ _____
(Signature) (Date)

CONCURRENCE:

Regional Chief: _____ _____
(Signature) (Date)

MANDATORY 10-YEAR RE-EVALUATION DATE:

_____

LITERATURE CITED:

Arcese, P. 1987. Age, intrusion pressure, and defense against floaters by territorial male song sparrows. Animal Behavior 35:773-784.

Batten, L.A. 1977. Sailing on reservoirs and its effects on water birds. Biological Conservation 11:49-58.

Bauer, H.G., H. Stark, P. Frenzel. 1992. Disturbance factors and their effects on water birds wintering in the western parts of Lake Constance. Der Ornithologische Beobachter 89(2):81-91.

Belanger, L. and J. Bedard. 1990. Energetic cost of man-induced disturbance to staging snow geese. Journal of Wildlife Management 54:36-41.

Bouffard, S.H. 1982. Wildlife values versus human recreation: Ruby Lake National Wildlife Refuge. Transactions of the North American Wildlife and Natural Resource Conference 47:553-558.

Boyle, S.A. and F.B. Samson. 1985. Effects of nonconsumptive recreation on wildlife: A review. Wildlife Society Bulletin 13:110-116.

Burger, J. 1981. The effect of human activity on birds at a coastal bay. Biological Conservation.

Butler, J.R. 1984. The myths, the reality, and the challenges of managing for the non-consumptive wildlife user. *In* W. C. McComb, editor and compiler. Proceedings of the Workshop on Management of Nongame Species and Ecological Communities. University of Kentucky, Department of Forestry, Lexington, Kentucky. 404 pp.

Burger, J. 1986. The effect of human activity on shorebirds in two coastal bays in Northeastern United States. Biological Conservation 13:123-130.

Burger, J. and M. Gochfeld. 1981. Discrimination of the threat of direct versus tangential approach to the nest by incubating herring and great black-backed gulls. Journal of Comparative Physiological Psychology 95:676-684.

____. 1998. Effects of ecotourists on bird behavior at Loxahatchee National Wildlife Refuge, Florida. Environmental Conservation 25:13-21.

Burger, J., M. Gochfeld, and L.J. Niles. 1995. Ecotourism and birds in coastal New Jersey: Contrasting responses of birds, tourists, and managers. Environmental Conservation 22:56-65.

Cairns, W.E. and I.A. McLaren. 1980. Status of the piping plover on the east coast of North America. American Birds 34:206-208.

Carlson, L.H. and P.J. Godfrey. 1989. Human impact management in a coastal recreation and natural area. Biological Conservation.

Cassirer, E.F., D.J. Freddy, E.D. Ables. 1992. Elk responses to disturbance by cross-country skiers in Yellowstone National Park. Wildlife Society Bulletin.

Cole, D.N. 1990. Ecological impacts of wilderness recreation and their management. *In:* Hendee, J.C., G.H. Stankey, R.C. Lucas. eds., Wilderness Management.

Cole, D.N., and P.B. Landres. 1995. Indirect effect of recreation on wildlife in Knight, R.L, and K.J. Gutzwiller, eds. 1995. Wildlife and Recreationists—Coexistence Through Management and Research. Washington, DC. Island Press.

Dearden, P. and C. Hall. 1983. Non-consumptive recreation pressures and the case of the Vancouver Island marmot (*Marmota vancouverensis*). Environmental Conservation. Erwin, R.M. 1980. Breeding habitat by colonially nesting water birds in two mid-Atlantic U.S. regions under different regimes of human disturbance. Biological Conservation 18:39-51.

Evenson, D., C. Hopkins, and G. Martz. 1974. Waterfowl and waterfowl hunting at Houghton Lake. Michigan Department of Natural Resources, Wildlife Division, Infor. Circ. 171, Lansing, Michigan. 7pp.

Ewald, P.W. and F.L Carpenter. 1978. Territorial responses to energy manipulations in the Anna hummingbird. Oecologia 31:277-292.

Ferguson, M.A.D. and L.B. Keith. 1982. Influence of nordic skiing on distribution of moose and elk in Elk Island National Park, Alberta. Canadian Field-Naturalist.

Freddy, D.J., W.M. Bronaugh, and M.C. Fowler. 1986. Responses of mule deer to disturbance by persons afoot and in snowmobiles. Wildlife Society Bulletin 14:63-68.

Goff, G.R., D.J. Decker, and G. Pomerantz. 1988. A diagnostic tool for analyzing visitor impacts on wildlife refuges: a basis for a systematic approach to visitor management. Transactions of the Northeast Section of the Wildlife Society.

Goodrich, J.M. and J. Berger. 1994. Winter recreation and hibernating black bears *Ursus americanus*. Biological Conservation. Gutzwiller, K.J., R.T. Wiedenmann, K.L. Clements, and S.H. Anderson. 1994. Effects of human intrusion on son occurrence and singing consistence in subalpine birds. The Auk 111(1):28-37.

Hall, D. and P. Dearden. 1984. The impact of non-consumptive recreation on wildlife: an annotated bibliography.

Hammitt, W.E. and D.N. Cole. 1998. Wildland Recreation. John Wiley & Sons, New York, 361 pp.

Hartman, G.W. 1972. The biology of dump nesting in wood ducks. M.S. thesis, University of Missouri-Columbia. 66pp.

Havera, S.P., L.R. Boens, M.M. Georgi, and R.T. Shealy. 1992. Human disturbance of waterfowl on Keokuk Pool, Mississippi River. Wildlife Society Bulletin 20:290-298.

Henson, P.T. and A. Grant. 1991. The effects of human disturbance on trumpeter swan breeding behavior. Wildlife Society Bulletin 19:248-257.

Johnson, R.E. 1964. Fish and fowl. Pages 453-458 *in* J.P. Linduska, ed., Waterfowl tomorrow. U.S. Department of Interior, Fish and Wildlife Service. U.S. Government Printing Office, Washington, DC.

Kaiser, M.S. and E.K. Fritzell. 1984. Effects of river recreationists on green-backed heron behavior. Journal of Wildlife Management 48:561-567.

Kahl, R. 1991. Boating disturbance of canvasbacks during migration at Lake Poygan, Wisconsin. Wildlife Society Bulletin 19:242-248.

Klein, M.L. 1989. Effects of high levels of Human Visitation on Foraging Waterbirds at J.N. "Ding" Darling NWR, Sanibel, Florida. Final Report to USFWS. 103 pp.

Klein, M.L. 1993. Waterbird behavioral responses to human disturbance. Wildlife Society Bulletin 21:31-39.

Klein, M.L., S.R. Humphrey, and H.F. Percival. 1995. Effects of ecotourism on distribution of waterbirds in a wildlife refuge. Conservation Biology 9:1454-1465.

Knight, R.L. and S.K. Skagen. 1988. Effects of recreational disturbance on birds of prey: a review. *In:* Glinski, R.L., B.G. Pendelton, M.B. Moss, M.N. LeFranc, Jr., B.A. Millsap, S.W. Hoffman, C.E. Ruibal, D.L. Krahe, D.L. Owenseds., Proceedings of the southwest raptor management symposium and workshop.

Knight, R.L., and D.N. Cole. 1991. Effects of recreational activity on wildlife in wildlands. Trans. 56th National Association of Wildlife and Natural Resources Conference. Pp. 238-247.

____. 1995. Wildlife responses to recreationists. Pp. 51-69 in: Knight, R.L. and K.J. Gutzwiller eds., Wildlife and recreationalists: coexistence through management and research. Island Press, Washington, DC. 372 pp.

Korschen, C.E., L.S. George, and W.L. Green. 1985. Disturbance of diving ducks by boaters on a migrational staging area. Wildlife Society Bulletin 13:290-296.

Korschgen, C.E., and R.B. Dahlgren. 1992. Human disturbances of waterfowl: causes, effects, and management. U.S. Fish and Wildlife Leaflet 13.2.15: 8pp.

Kuss, F.R. and A.R. Graefe. 1985. Effects of recreation trampling on natural area vegetation. Journal of Leisure Research.

Kuss. F. 1986. A review of major factors influencing plant responses to recreation impacts. Environmental Management. 10:638-650.

Kushlan, J.A. 1978. Feeding ecology of wading birds. Pp. 249-297 in: A. Sprunt IV, J.C. Ogden, and S. Winckler, eds., Wading Birds. National Audubon Society, New York, New York.

Marion, J.L. and D.W. Lime. 1986. Recreational resource impacts: visitor perceptions and management responses. In: Kulhavy, D.L. and R.N. Conner eds., Wilderness and natural areas in the eastern United States: a management challenge.

Mathews, G.V.T. 1982. The control of recreational disturbance. Pages 325-330 *in* D.A. Scott, ed., Managing wetlands and their birds, a manual of wetland and waterfowl management. Proceedings 3rd Technical Meeting on Western Palearctic Migratory Bird Management, Biologishche Station Rieselfelder Münster, Federal Republic of Germany, 12-15 October 1982.

McNeil, R., P. Drapeau, and J.D. Goss-Custard. 1992. The occurrence and adaptive significance of nocturnal habitats in waterfowl. Biological Review 67:381-419.

Mickelson, P.G. 1975. Breeding biology of cackling geese and associated species on the Yukon-Kuskokwim Delta, Alaska. Wildlife Monograph 45, The Wildlife Society, Washington, DC. 35pp.

Miller, S.G., R.L. Knight, and C.K. Miller. 1998. Influence of recreational trails on breeding bird communities. Ecological Applications 8:162-169.

____. 2001. Wildlife responses to pedestrians and dogs. Wildlife Society Bulletin 29(1):124-132.

More, T.A. 1979. The demand for nonconsumptive wildlife uses: a review of the literature.

Morton, J.M., A.C. Fowler, and R.L. Kirkpatrick. 1989. Time and energy budgets of American black ducks in winter. Journal of Wildlife Management 53:401-410 (also see corrigendum in Journal of Wildlife Management 54:683).

Purdy, K.G., G.R. Goff, D.J. Decker, G.A. Pomerantz, N.A. Connelly. 1987. A guide to managing human activity on National Wildlife Refuges.Owen, M. 1973. The management of grassland areas for wintering geese. Wildfowl 24:123-130

Reichholf, J. 1976. The influence of recreation activities on waterfowl. Pages 364-369 *in* M. Smart, ed., Proceedings of the International Conference on Conservation of Wetlands and Waterfowl, Heiligenhafen, Federal Republic of Germany, 2-6 December 1974. International Waterfowl Research Bureau, Slimbridge (Glos), England.

Rodgers, J.A., and H.T. Smith. 1995. Set-back distances to protect nesting bird colonies from human disturbance in Florida. Conservation Biology 9:89-99.

____. 1997. Buffer zone distances to protect foraging and loafing waterbirds from human disturbance in Florida. Wildlife Society Bulletin 25:139-145.

Speight, M.C.D. 1973. Outdoor recreation and its ecological effects: a bibliography and review. University College, London, England, Discussion Paper Conservation 4. 35pp.

Trails and Wildlife Task Force. 1998. Planning trails with wildlife in mind: a handbook for trail planners. Colorado State Parks, Denver, Colorado. 51pp.

Van der Zande, A.N., J.C. Berkhuizen, H.C. Van Latesteijn, W.J. Ter Keurs, A.J. Poppelaars. 1984. Impact of outdoor recreation on the density of a number of breeding bird species in woods adjacent to urban residential areas. Biological Conservation.

Vaske, J.J., A.R. Graefe, and F.R. Kuss. 1983. Recreation impacts: a synthesis of ecological and social research. Transactions of the North American Wildlife and Natural Resource Conference 48:96-107.

Ward, D.H. and R.A. Stehn. 1989. Response of brant and other geese to aircraft disturbance at Izembek Lagoon, Alaska. U.S. Fish and Wildlife Service, Alaska Fish and Wildlife Research Center. Final report to the Minerals Management Service. Anchorage, Alaska. 193 pp.

Whittaker, D. and R.L. Knight. 1998. Understanding wildlife responses to humans. Wildlife Society Bulletin 26:312–317.

Williams, G.J. and E. Forbes. 1980. The habitat and dietary preferences of dark-bellied brant geese and widgeon in relation to agricultural management. Wildfowl 31:151-157.

FWS Form 3-2319
02/06

FINDING OF APPROPRIATENESS OF A REFUGE USE

Refuge Name: Silvio O. Conte National Fish and Wildlife Refuge

Use: Snowmobiling on Designated Snowmobile Trails on the Dead Branch Division

This form is not required for wildlife-dependent recreational uses, take regulated by the State, or uses already described in a refuge CCP or step-down management plan approved after October 9, 1997.

Decision Criteria:	**YES**	**NO**
(a) Do we have jurisdiction over the use?	✔	
(b) Does the use comply with applicable laws and regulations (Federal, State, Tribal, and local)?	✔	
(c) Is the use consistent with applicable Executive orders and Department and Service policies?	✔	
(d) Is the use consistent with public safety?	✔	
(e) Is the use consistent with goals and objectives in an approved management plan or other document?	✔	
(f) Has an earlier documented analysis not denied the use or is this the first time the use has been proposed?	✔	
(g) Is the use manageable within available budget and staff?	✔	
(h) Will this be manageable in the future within existing resources?	✔	
(i) Does the use contribute to the public's understanding and appreciation of the refuge's natural or cultural resources, or is the use beneficial to the refuge's natural or cultural resources?	✔	
(j) Can the use be accommodated without impairing existing wildlife-dependent recreational uses or reducing the potential to provide quality (see section 1.6D, 603 FW 1, for description), compatible, wildlife-dependent recreation into the future?	✔	

Where we do not have jurisdiction over the use ["no" to (a)], there is no need to evaluate it further as we cannot control the use. Uses that are illegal, inconsistent with existing policy, or unsafe ["no" to (b), (c), or (d)] may not be found appropriate. If the answer is "no" to any of the other questions above, we will generally not allow the use.

If indicated, the refuge manager has consulted with State fish and wildlife agencies. Yes___✔___No ____.

When the refuge manager finds the use appropriate based on sound professional judgment, the refuge manager must justify the use in writing on an attached sheet and obtain the refuge supervisor's concurrence.

Based on an overall assessment of these factors, my summary conclusion is that the proposed use is:

Not Appropriate _____ **Appropriate** ___✔___

Refuge Manager: _____ Date: _____

If found to be **Not Appropriate**, the refuge supervisor does not need to sign concurrence if the use is a new use.

If an existing use is found **Not Appropriate** outside the CCP process, the refuge supervisor must sign concurrence.

If found to be **Appropriate**, the refuge supervisor must sign concurrence:

Refuge Supervisor: _____ Date: _____

A compatibility determination is required before the use may be allowed.

JUSTIFICATION FOR A FINDING OF APPROPRIATENESS OF A REFUGE USE

Refuge Name: Silvio O. Conte National Fish and Wildlife Refuge

Use: Snowmobiling on Designated Snowmobile Trails on the Dead Branch Division

NARRATIVE:

The Commonwealth of Massachusetts has over 2,000 miles of snowmobile trails (Snowmobile Association of Massachusetts, undated). The 0.2 miles of snowmobile trail on the Dead Branch Division is part of a larger trail network in the area that connects trails in Williamsburg with trails in the Berkshires. Snowmobile recreation is a popular winter activity in Massachusetts and it provides access to the refuge and can provide an opportunity for visitors to be introduced to the refuge. The best way to engage visitors on this short section of trail will be to install boundary signs at both entrance points and construct an informational kiosk near the southern boundary.

The primary reason for retaining the existing trail is for snowmobiles to avoid wet areas off the division and to use an existing snowmobile bridge over the Dead Branch that has been in place for many years. The route for this trail (State Corridor Trail 93) is in an abandoned utility corridor that extends nearly 7 miles starting in Williamsburg. Both this corridor, and the trail proper, lie just south of the division boundary. However, early in the snowmobile season when there is sufficient snow cover to open the trail elsewhere, the section just south of the division is unsuitable because the saturated soils have not yet frozen and the Dead Branch is unsafe to cross. During this period, the historical route on the division offers a safe and environmentally sound alternative to the main trail. This trail is used less once the ground and stream are frozen, but it used throughout the snowmobile season by some.

The use does not interfere with the refuge's conservation goals and objectives, because impacts to trust resources during winter are minimized when the ground is frozen and covered with snow and fewer species and fewer numbers of wildlife are present. Key winter habitat for most resident wildlife such as big game and gallinaceous birds (e.g., species of grouse) would be minimally affected by snowmobile presence on the short section of trail on the refuge. Because this sort section of trail lies within the former Berkshire Hardwoods wood mill site and there is limited to no thermal cover, little impact to resident winter wildlife is anticipated.

This use may also contribute to public understanding of, and appreciation for, the refuge's natural resources by providing opportunities for participants to experience the refuge, see refuge habitats, and support wildlife-dependent recreation during winter when access to the majority of the refuge is otherwise limited.

We anticipate that noise from use of this trail may be an annoyance to other visitors. However, the trail on the division is a small link in the larger state trail network and snowmobile noise will continue to be present, as it has for several decades, whether or not the division trail is open because most of the trail is on private property. Although snowmobiles emit exhaust and can have loud engines, the Commonwealth of Massachusetts (undated) requires that no snowmobiles be operated which emit noxious fumes or produce a sound pressure level of more than 96 decibels using test procedures established by the Society of Automotive Engineers under Standard J1287 JUL98 or other test procedures adopted by the State. Also, the level of pedestrian use on the refuge is relatively limited because this division was newly created in 2011 and there is no other visitor infrastructure.

For these reasons, we have determined that continuing to allow this use is consistent with the U.S. Fish and Wildlife Service's policy on the appropriateness of refuge uses (603 FW 1).

This finding of appropriateness and the compatibility determination for this use was distributed for public comment for 90 days from August 18, 2015 to November 16, 2015 as part of the review of the Silvio O. Conte Refuge's draft CCP/EIS. Comments we received on this use were considered as we developed this final determination. A summary of comments received on the draft plan is included in appendix O of the final CCP/EIS. This finding will undergo another 30-day review with release of the final CCP/EIS.

LITERATURE CITED

Commonwealth of Massachusetts. Undated. Massachusetts General Laws, Part I, Title XIV, Chapter 90B, Section 24 Lights; reflectors; excessive noise; noxious fumes. Accessed July 2013 at *https://malegislature.gov/Laws/GeneralLaws/PartI/TitleXIV/Chapter90B/Section24*

Snowmobile Association of Massachusetts. Undated. Committed to enhancing safe snowmobiling in Massachusetts. Accessed July 2013 at: *http://sledmass.com/about-2/*.

COMPATIBILITY DETERMINATION

USE:

Snowmobiling on Designated Snowmobile Trails on the Dead Branch Division

REFUGE NAME:

Silvio O. Conte National Fish and Wildlife Refuge (Conte Refuge)

DATE ESTABLISHED:

October 3, 1997

ESTABLISHING AND ACQUISITION AUTHORITY(IES):

- Silvio O. Conte National Fish and Wildlife Refuge Act (Public Law 102-212).
- Migratory Bird Conservation Act of 1929.
- Land and Water Conservation Fund Act of 1965.

REFUGE PURPOSE(S):

- To conserve, protect, and enhance the Connecticut River populations of Atlantic salmon, American shad, river herring, shortnose sturgeon, bald eagles, peregrine falcons, osprey, black ducks, and other native species of plants, fish, and wildlife.
- To conserve, protect, and enhance the natural diversity and abundance of plant, fish and wildlife species and the ecosystem upon which these species depend within the refuge.
- To protect species, listed as endangered or threatened, or identified as candidates for listing, pursuant to the Endangered Species Act of 1973 (ESA) as amended (16 U.S. 1531 et seq.).
- To restore and maintain the chemical, physical, and biological integrity of wetland and other waters within the refuge.
- To fulfill the international treaty obligations of the United States relating to fish and wildlife and wetlands.
- To provide opportunities for scientific research, environmental education, and fish and wildlife oriented recreation and access to the extent compatible with the other purposes stated in this section.

NATIONAL WILDLIFE REFUGE SYSTEM MISSION:

To administer a national network of lands and waters for the conservation, management, and where appropriate, restoration of the fish, wildlife, and plant resources and their habitats within the United States for the benefit of present and future generations of Americans.

DESCRIPTION OF USE:

(a) What is the use? Is the use a priority public use?
Public snowmobile access is the use considered in this Compatibility Determination. This is not a priority public use of the National Wildlife Refuge System (Refuge System), under the National Wildlife Refuge System Administration Act of 1966 (16 U.S.C. 668dd-668ee), as amended by the National Wildlife Refuge System Improvement Act of 1997. This compatibility determination pertains only to non-commercial, public snowmobile access on the Dead Branch Division; commercial snowmobile tours are a different use that would need to be considered separately.

Map D.4. Snowmobile Trail at Dead Branch Division.

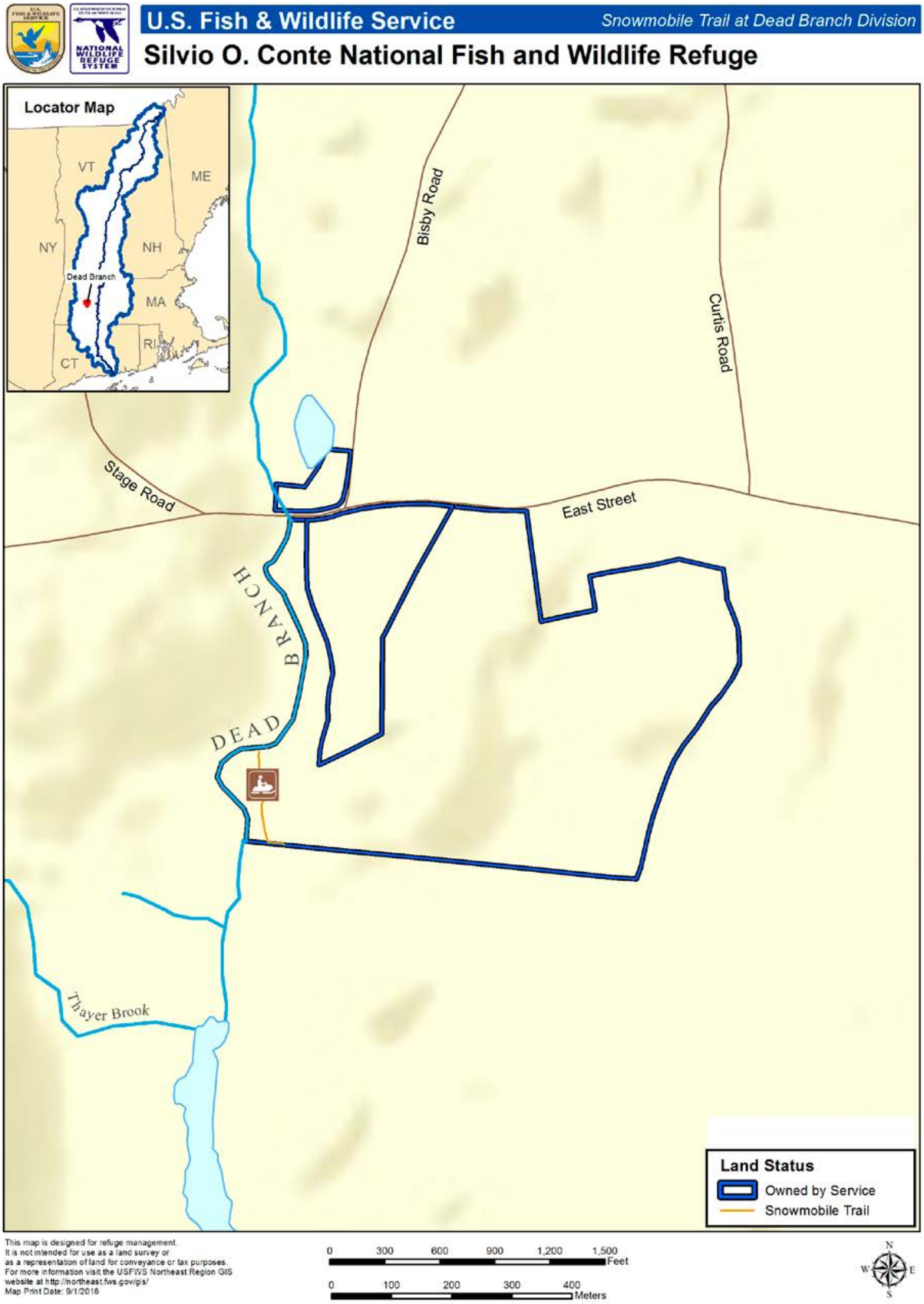

(b) Where would the use be conducted?
Massachusetts has more than 2,000 miles of snowmobile trails. The Dead Branch Division included approximately 0.2 miles of snowmobile trail through the former Berkshire Hardwoods mill site (see map D.4). This trail is part of a larger network that connects the Williamsburg area to trails in the Berkshires. The U.S. Fish and Wildlife Service (Service) owns this land in fee.

Assuming a 12-foot wide trail, approximately 0.3 acres or 0.03 percent of the division landbase is directly impacted by the active snowmobile trail. The snowmobile trail is located in mixed hardwood habitat within 300 feet of log landings of the former mill site. A limited number of migratory bird species are affected because most move to their wintering areas prior to snowmobile season. Some species such as black-capped chickadees, downy woodpeckers, ruffed grouse, white-tailed deer, and other forest species that overwinter may be affected by snowmobile presence. Black bears, reptiles, amphibians, bats, beavers, and fish may be found in the vicinity, but typically these species are inactive or under ice during the snowmobile season. No federally listed species are known to occur at the Dead Branch Division.

(c) When would the use be conducted?
Snowmobile use on the refuge would begin no earlier than December 1 and end no later than April 30. This minimizes conflicts with migratory and hibernating wildlife, and soil disturbance since snow cover is a prerequisite to opening the trail. Snowmobile access and trail grooming will be allowed during daytime and nighttime hours. General trail maintenance activities such as brush cutting and down tree removal also may be performed occasionally during the late summer and fall.

(d) How would the use be conducted?
Snowmobilers at the Dead Branch Division must comply with Massachusetts General Law Part I, Title XIV, Chapter 90B *Motorboats, other vessels, and recreational vehicles* which includes provisions for annual registration, manufacturing specifications, and rules for lawful operation (Commonwealth of Massachusetts Undated a). Individual snowmobile operators are required to obtain permission to use public lands, unless they are on a trail marked and designated for use by snowmobiles (Commonwealth of Massachusetts Undated b).

In Massachusetts, snowmobiles must be registered for a 2-year period with the Massachusetts Boat, Recreation Vehicle, and Snowmobile Registration Bureau unless they are exclusively used for agricultural, forestry, lumbering, or construction purposes (Commonwealth of Massachusetts Undated a). Snowmobilers that ride on Snowmobile Association of Massachusetts (SAM) club trails across private property must be a SAM member or have written permission of each landowner (Commonwealth of Massachusetts Undated c). SAM uses these funds for a variety of related purposes including liability insurance and trail maintenance. A portion of the registration fees also support Massachusetts Environmental Police Officers engaged in snowmobile enforcement.

Snowmobile access and use on the Dead Branch Division also will comply with applicable federal regulations (50 CFR 27.31), and executive orders (11644 *Use of Off-Road vehicles on the Public Lands,* February 8, 1972; and, 11989 *Off-Road Vehicles on Public Lands,* May 24, 1977). An annual special use permit (SUP) will be issued to the local snowmobile club affiliated with SAM for the purpose of authorizing snowmobile use, trail maintenance, and grooming on the Dead Branch Division. One stipulation of this permit is that SAM must carry general liability insurance for the snowmobile club.

The snowmobile club will be responsible for funding and carrying out maintenance and infrastructure repair to maintain a safe snowmobile trail on the Division. They will install signage (e.g. trail number and speed limit) authorized by the Refuge Manager before the trail opens in winter, maintain those signs throughout the snowmobile season, and remove them when the season ends. The local club also is responsible for grooming the trail on the division throughout the snowmobile season. Grooming will generally be done at night with the frequency dependent on snow and trail conditions. During the late summer or fall, with prior approval in writing by the Refuge Manager, the club may prepare the trail for the upcoming season by cutting back woody vegetation and removing trees that have fallen across the trail. Under the permit, club members may use all-terrain vehicles solely to access the trail for maintenance and sign activities during the late summer or fall; however, they must secure permission by notifying the Refuge Manager at least 48 hours in advance.

We will allow snowmobiling generally following MassWildlife snowmobiling guidelines, where otherwise compatible and consistent with applicable Service laws, policy and guidelines. The refuge manager will continue to meet with the club at least annually to discuss and reach agreement on planned activities and to review SUP

stipulations and conditions. Because clubs must secure landowner permission for construction and maintenance grants, the annual meeting also will serve to identify any up-front requirements for work on the Division (e.g. compliance with the National Environmental Policy Act).

There is a 0.2-mile section of snowmobile trail within the division boundary that was in existence prior to Service ownership. This trail enters the Division from the North on the current western boundary, crosses the Dead Branch and exists on the southern boundary. Historically, this trail crossed a larger section of the former Berkshire Hardwoods mill site; however, it was shortened and rerouted to avoid the log landings (personal communication, Jeff Poirier Berkshire Hardwoods).

According to SUP conditions, the snowmobile trail will not open prior to December 1 and will close on or before April 30, each year. The actual length of the season will be dependent on having enough snow cover to protect underlying soils and vegetation.

Snowmobile operation must be reasonable and prudent as described in Federal regulations (50 CFR 27.31) and State regulations (323 CMR 3.03:4).

(e) Why is this use being proposed?
As previously stated, the snowmobile trail within the refuge boundary was in existence prior to Service purchase. This section is part of a larger trail network that links the Williamsburg vicinity with the Berkshires. The trail section on the division has been in existence for many years (personal communication, Jeff Poirier Berkshire Hardwoods). Mr. Poirier has been satisfied with the snowmobile club partnership and the trail riders.

The primary reason for retaining the existing trail is for snowmobiles to avoid wet areas off the division prior to the hard freeze and to use an existing snowmobile bridge over the Dead Branch that has been in place for many years. The route for this trail (State Corridor Trail 93) is in an abandoned utility corridor that extends nearly 7 miles starting from the town of Williamsburg. This corridor and the trail proper lie just south of the division boundary. However, early in the snowmobile season when there is sufficient snow cover to open the trail elsewhere, the section just south of the division is unsuitable because the saturated soils have not yet frozen and the Dead Branch is unsafe to cross. During this period, the historical route on the Division offers a safe and environmentally sound alternative to the main trail. This trail is used less once the ground and stream are frozen, but it used throughout the snowmobile season by some.

The majority of migratory birds found on the division are breeders or migrants that move south to more temperate climates during the winter. Snowmobiling at the Dead Branch Division would be inconsequential to these species because there is no temporal overlap in use and habitat composition and structure would not be altered. Some species, such as chickadees, downy woodpeckers, and nuthatches remain in the area yearlong and would be affected to some degree by snowmobile use. However, the short section of trail does not intersect unique habitat and individual birds affected by snowmobiles have ample suitable habitat to avoid disturbance.

Key winter habitat for most resident wildlife such as big game, gallinaceous birds (e.g. grouse) would be minimally affected by snowmobile presence. Winter thermal cover for many species in this part of Western Massachusetts is composed of dense conifers, rhododendrons, or mountain laurels (Massachusetts Department of Fish and Game Undated). Because this trail is short and does not intersect key winter range habitat, little impact to resident winter wildlife is anticipated.

There are benefits of allowing snowmobile use of the trail across the division. From the snowmobile club perspective closure of this trail would create a gap in a historically popular trail during the early part of the season. The necessary rerouting to avoid the wet areas south of the division and construction of another bridge would in all likelihood entail new road crossings and trail and bridge construction on private lands, if permission could be secured. It would also be longer than the current route. Moving this trail would result in alteration of habitats not currently impacted and be a significant expense. The current trail location has minimal effect on habitat composition and structure because of its limited length.

One means of reaching snowmobilers is via an informational kiosk on the south end of the trail where snowmobilers can stop and view information. We would work in cooperation with the other conservation partners (i.e. SAM, local snowmobile club, and the Department of Fish and Game) to construct an informational kiosk along the trail if use levels warrant. This would give us and partners an opportunity to connect with

riders through interpretive displays, brochures, fact sheets, and other pertinent information that will increase their understanding of the importance of this refuge and how it fits into the larger conservation efforts of the Service.

An unknown number of snowmobilers that enter the division engage in one or more priority public uses, particularly wildlife observation and photography. Moose, deer, and coyotes are active at the Dead Branch Division in winter and seeing them during a warm day would not be unusual. However, because the trail on the division is so short (0.2 miles) and lies within a forest without vistas, most snowmobilers are likely passing through to another destination. Today, most snowmobilers probably do not even know they are on a national wildlife refuge; however, continued use of this existing trail through the division has the potential to cultivate support from a non-traditional public sector and give them an appreciation of the conservation importance of the Dead Branch Division.

AVAILABILITY OF RESOURCES:

Sufficient Refuge resources in terms of personnel and budget are available to administer snowmobiling on the refuge. The Dead Branch Division is approximately 1 hour from the Sunderland, Massachusetts headquarters, but Massachusetts Environmental Police Officers have the authority to enforce State snowmobile regulations on SAM trails and are the primary law enforcement agency for snowmobiling in Massachusetts. This would be a continuation of how snowmobile laws and regulations were administered when the land was owned and managed by the previous owners. This portion of the Conte Refuge is covered by a Zone Refuge Law Enforcement Officer. Refuge staff will be responsible for onsite evaluations to resolve public use issues, monitor and evaluate impacts, maintain boundaries and signs, and meet with state officials, adjacent landowners and the interested public, when necessary. All costs for trail maintenance and repair are borne by SAM and carried out by the local snowmobile club under a refuge SUP.

Annualized costs associated with the administration of snowmobiling on the Refuge are estimated below:

Initial Costs

Document preparation/review/public comment	$1,000
Supplies (kiosk construction, brochures, kiosk notices)	$3,500
Traffic counter purchase	$2,000
Law enforcement/responding to the public	$1,000
Total Initial Costs	**$7,500**

Annual Costs

Issue & administer SUP (GS-12 Refuge Manager)	$1,000
Refuge law enforcement (GS-11 Zone Officer)	$1,000
Resource impact evaluation (GS-12 Refuge Manager)	$1,000
Vis itor contacts (in addition to Law Enforcement) (GS-12 Refuge Manager)	$1,000
Traffic counter maintenance/data collection/analysis	$1,000
Miscellaneous	$500
Total Annual Costs	**$5,500**

The estimated costs listed above are primarily salary costs. Monitoring public use and providing law enforcement are required for properly administering public use programs; therefore, these operations are

accounted for in budget and staffing projections. Additional law enforcement on the division is provided by Massachusetts Environmental Police Officers at no cost.

No special facilities or resources are needed to administer snowmobile use on the Dead Branch Division. There is no cost to the Refuge for trail maintenance which is provided by the local snowmobile clubs with funds from SAM. This trail is lightly used during the rest of the year, so no additional maintenance considerations are necessary.

Based on a review of the budget allocated for recreational use management, we certify that annual funds are adequate to ensure compatibility and to administer and manage the recreational use described above.

ANTICIPATED IMPACTS OF THE USE:

Potential direct negative impacts resulting from snowmobile use on 0.2-mile trail include habitat loss and damage, pollution, and disturbance to wildlife and other refuge visitors. A positive effect of allowing this type of access will be winter access for a segment of the public that may not otherwise spend time on the refuge. By constructing an informational kiosk at a key location, these visitors will be exposed to educational panels and materials that will inform them of the division's role in wildlife conservation in the Connecticut River Watershed, the Refuge System, and Service.

Habitat Loss and Damage

This trail has been used for many year, although the exact date of trail opening is unknown. This generally north-south oriented trail directly affects approximately 0.3 acres of land or about 0.03 percent of the current division landbase. The direct loss of habitat is considered inconsequential because travel and trail grooming only commence when there is a sufficient snow pack. Trails are closed in the spring or during the season if patches of ground become exposed.

The most common impacts to vegetation attributable to snowmobiles are physical damage like bending and breaking when hit or run over (Stangl 1999). Additionally, plants are impacted during trail maintenance when shrubs and sapling trees are trimmed back; however, similar impacts occur throughout the power line corridor where vegetative growth is retarded to protect the electrical lines. Trimming associated with the snowmobile trail is done by hand or with power brush cutters which sets back growth, but does not kill the plants. Brush cutting only occurs when woody plants encroach within the trail corridor or are tall enough to protrude above the snow surface. Plants in the snowmobile trail probably end winter dormancy later and are less productive than those that are unaffected (Stangl 1999). No federally listed or State-listed plants are known from the area encompassing the snowmobile trail. The amount of habitat directly affected by the snowmobile trail represents a small percentage of similar habitat in the division.

Soils

Soil temperature fluctuations are moderated during winter by a covering of snow. When this layer is compacted, as is the case with a snowmobile trail, soil temperatures are generally lower and freezing is deeper which can be detrimental to both plants and soil microbes (Douglass et al. 1999, Stangl 1999). Impacts depend on snow depth, traffic intensity, and soil and plant susceptibility. Bog soils and shrubs are particularly susceptible to these types of impacts (Stangl 1999). Compacted snow melts rapidly and has lower water holding capacities (Douglass et al. 1999), which can increase erosion during spring melt, particularly on slopes. Probable soil impacts on this include compaction and possibly localized erosion. However, there is no perceptible evidence of substantial soil or plant degradation and erosion is minimal on this generally flat trail.

Air Resources

Until recently, two-stroke snowmobiles with traditional carburetors were the only models available. Within the last few years manufacturers, responding in part to calls for quieter and cleaner burning snowmobiles, have brought direct injection, two-stroke and four stroke engines to market. Two-stroke engines are commonly preferred for their better power to weight ratio (Braven 2009), although advancements in four-stroke technology has improved their performance.

Two-stroke carbureted snowmobile engines emit pollutants, particularly hydrocarbons and particulate matter, through exhaust systems from an incomplete combustion of fuel and oil (NPS 2000, GAO 2000). Four-stroke engines are cleaner, but still produce similar levels of carbon monoxide and oxides of nitrogen (University of Wyoming 2000). A recent addition to the market has been direct injection two-stroke snowmobiles that emit fewer pollutants than the carbureted versions. In fact, these engines can cut hydrocarbon emissions by about 70 percent (NPS 2000).

According to information cited by the U.S. General Accounting Office (2000), the National Park Service concluded, primarily through analyses of studies in Yellowstone and Grand Teton national parks, snowmobiles caused increased levels of air pollution. At that time traditional two-stroke engines were the only versions readily available. On an average day in Yellowstone National Park during the 1990s over 700 snowmobiles entered the park (NPS 2000), with peak day with peak day use exceeding 2,000. The park averaged 66,619 snowmobile visits annual from 1992 to 1999. Up to one-third of the fuel can pass through the exhaust, unburned (University of Wyoming, Institute for Environment and Natural Resources 2000). Two-stroke snowmobiles reportedly produced 68 to 90 percent of the hydrocarbons and 35 to 69 percent of carbon monoxide emissions at those parks during the winter (NPS 2000). In response to concerns including air pollution, Yellowstone National Park is in the process of developing a long-term plan for winter operations, including snowmobiles (NPS 2013).

A study cited in the Final Comprehensive Conservation Plan and Environmental Impact Statement (CCP/EIS) for the Little Pend Orielle National Wildlife Refuge (Little Pend Orielle Refuge) in northeastern Washington stated that average snowmobile emission per hour is 216 grams of hydrocarbons and nitrous oxide and 564 grams of carbon monoxide per horsepower (USFWS 2000). Reportedly, a 54-horsepower two-stroke, carbureted snowmobile engine was estimated to emit approximately 360 times as much pollution per hour as an automobile. It should be noted that this information is based on the higher polluting, traditional two-stroke engines.

Other studies cited in the CCP claimed that such air pollutants can result in foliar injury, reduced productivity, tree mortality, decreased growth, altered plant populations, modifications in species diversity, increased susceptibility to pests and diseases, and pollutant depositions that melt into streams during spring snow melt. Neither the exposure levels nor duration necessary to cause these effects were stated. These impacts were derived from a literature source and the CCP does not say whether these impacts were evident on the refuge.

The amount and impact, if any, of snowmobile emissions at the Dead Branch Division have not been studied. Neither have the effects of snowmobile exhaust emissions on habitat or wildlife, but the types of vegetative impacts described in the Little Pend Orielle Refuge CCP are not evident at this division. Annual snowmobile traffic at the division has not been monitored but it undoubtedly is substantially lower than those reported for Yellowstone, where, outside of the high concentration areas around West Yellowstone and Old Faithful, snowmobiles were not substantially affecting atmospheric deposition of the principal pollutants (Ingersoll 1998). This author reported diminished levels of carbon monoxide, a primary emission compound from two-stroke snowmobiles, at monitoring stations 20 and 100 meters from park entry points. The influence of snowmobiles on air quality is expected to diminish in the future because viable alternatives to higher polluting two-stroke snowmobiles are becoming more popular.

Pollutants are emitted by snowmobiles using the Dead Branch snowmobile trail. There is no evidence of chronic air pollution, similar to what was described for a high elevation site in Wyoming (Musselman and Korfmacher 2007). Undoubtedly, frequent winds dispersed pollutants more rapidly at their Wyoming study area, but dispersion also appears to be relatively quick at Dead Branch.

Aquatic Resources

The impacts of snowmobile exhaust on aquatic systems have not been well studied, but fish can acquire and accumulate hydrocarbons (Ruzycki and Lutch 1999). Adams (1975) found hydrocarbon levels and lead to be at high levels the week after ice out in a Maine pond where snowmobiles were driven over ice during the previous winter. Lead no longer is an additive in gasoline, and therefore, not a concern. Repeated packing of snow during grooming can accumulate pollutants on developed trails which are then released during spring runoff (Ruzycki and Lutch 1999). The effects of snowmobile exhaust on aquatic invertebrates have received little

attention. Currently, the trail crosses the Dead Branch on a snowmobile bridge as it enters the division. This stream supports a fishery cold water fishery.

Water pollution from snowmobiles is certainly a concern, but the traffic at Dead Branch is undoubtedly less than the study sites discussed in Olliff and Kaeding (1999). The industry movement toward less polluting snowmobiles will reduce threats to aquatic systems. Strategic monitoring may be warranted to evaluate snowmobile impacts to the Dead Branch.

Disturbance to Wildlife

Winter is a particularly stressful period for resident wildlife in northern latitudes due to severe weather, limited food resources, the energetic costs of moving through snow, and in some places, thermal cover limitations. Disturbance from any source during winter can tax energy reserves and be a contributing factor to winter mortality and affect reproduction. Several factors influence the impact of disturbance including timing, frequency, duration, and extent; physical condition of the individual animal; weather; habitat, particularly thermal cover, forage availability, quality, and spatial arrangement; and snow conditions. Late winter and early spring snow storms can be lethal, especially to pregnant females and those that are old, young, or in poor health.

Although individual animals certainly come into visual or auditory range of snowmobiles on the division and react by moving back into cover, there is no evidence to suggest that wildlife populations are being negatively affected. No specific evaluation of disturbance has been done at the Dead Branch Division, but a study of wildlife use in the vicinity of snowmobile trails at the Nulhegan Basin Division located in Essex County, Vermont, was recently completed (Benoit et. al. 2008). This work detected some differences in wildlife use near active snowmobile trails and unused trails, but the results were inconclusive because of confounding difference in snow accumulation between the two study years (2005 and 2008) and the habitat type adjacent to trails.

Some of the potentially negative effects of snowmobiling and other winter recreational activities on resident wildlife include:

1. Energetic costs of displacement by recreationists (Picton 1999). Herbivores, especially ungulates, operate at an energy deficit depending on stored body reserves during winter because high quality food is not readily available. Additional stress caused by recreationists flushing them from winter habitat can increase susceptibility to disease and predation, lead to higher mortality rates, and reduce productivity.

2. Displacement of animals into marginal or ineffective habitat (Clark and Wiseman 1999). High quality winter habitat is a key to survival for many herbivores, because of the close proximity of thermal protection and forage. Actions that cause animals to move to marginal habitats can lead to increased energy consumption during cold periods; increased travel distances for forage, decreased nutritional intake and reductions in thermal efficiency. Each of these can contribute to higher mortality rates.

3. Animals that are disturbed may alter their daily activity patterns leading to increased energy consumption and higher risk of predation (Clark and Wiseman 1999).

4. Direct mortality from collisions with snowmobiles.

Snowmobiling can have a limited, beneficial influence for some wildlife. Compacted snowmobile trails often serve as travel corridors because they are easier to walk on than adjacent deep snows. This was observed anecdotally in the study at the Nulhegan Basin Division (Benoit et. al. 2008). These trails may increase the probability of predator-prey confrontations. Snowmobile trails may allow some species to exploit new areas during winter. For instance, the compacted snow on trails appears to be necessary for coyotes to inhabit areas with deep snow (Bunnell et. al. 2006). This probably contributed to occupation of marginal habitats in the Northeast (Crete and Laiviere 2003) and a breakdown in spatial segregation of Canada lynx and coyotes during periods of deep snow (Bunnell et. al. 2006) where the two species overlap.

Most of the recent research of the effects of snowmobiling on wildlife and habitats has been conducted in the Greater Yellowstone Ecosystem (e.g., Olliff et al. 1999, Caslick 1997a, White et al. 2006). The conditions under which these studies were conducted including the number of snowmobiles per day (i.e. over 1,000 on a busy day) (Sacklin et al. 2000), affected habitats, and even species studied (e.g. bison and elk) may not have direct applicability to the Northeast and the Dead Branch Division. Older research was limited to studying two-stroke, traditional carburetion snowmobiles that used leaded fuel. These machines are much noisier than newer models and emit more pollutants, which at the time, included lead. Although that type of snowmobile is still the most common, newer direct-injection and four-stroke engines which are much less polluting are becoming more popular. So the application of the body of work on snowmobiling effects may not always be relevant to the situation at this division.

Most wildlife-related research has been limited to studying the effects of snowmobiling on individuals, then extrapolating potential impacts to populations. There has been little work done on the influence of snowmobile use on population dynamics. Although no direct research has been done on winter recreational effects, including snowmobiles, at the Dead Branch Division, deer populations in Western Massachusetts are at goal levels (Christensen 2011). The section of trail on the Dead Branch Division is too short to have a substantial impact on deer populations, but because it is part of a trail network it is important to consider the larger landscape. The extensive network of snowmobile trails west of the Connecticut River does not appear to be negatively impacting population levels.

Most of the Federal trust species (e.g. Neotropical migratory birds, waterfowl, American woodcock) are on winter ranges well before the start of snowmobile season and do not return in the spring until after the trails close. The trail on Service-owned land does not intersect any habitats that would serve as winter concentration areas.

Snowmobile travel on and through the division is limited to the established snowmobile trail confining disturbances to a specific area. The timing, location, and occurrence of snowmobile use are fairly predictable which allows wildlife to habituate (Biel 1999, Freddy et al. 1986). At least one study found that heart rates increased whenever snowmobiles were present with no apparent habituation (Moen et al. 1982), although the implications to survival were not assessed. Trail maintenance with a groomer often occurs at night when conditions warrant. Assuming the use of the trail corridor for wildlife is compromised by snowmobile use, the total area impacted is approximately 2.4 acres assuming a 100-foot-wide area of impact, representing about 2 percent of the division.

Wildlife that hibernate or go into a dormant state during the winter such as black bears, reptiles, amphibians are not directly impacted by snowmobile travel because use is limited to the trail in the utility corridor which affords little, if any, good winter hibernaculum habitat. Some small mammals (e.g. voles) remain active below the snow surface (i.e. subnivean habitat). The compacted snowmobile trail may be a barrier to their movement and can alter subnivean conditions such as lowering temperatures (Caslick 1997b). However, only a small portion of habitat at the division (0.3 percent) might be marginalized for these species.

Impacts to Visitors

Snowmobile engine noise increases with the amount of traffic and proximity of the listener. Yellowstone National Park officials believed that snowmobile use conflicted with the solitude of Park visitors, and the noise had an impact on the natural quiet of the park setting (GAO 2000). Snowmobile noise levels have not been documented at the Dead Branch Division; however, Massachusetts regulations prohibit use of snowmobiles producing sound pressure levels of more than 96 decibels when measured from a distance of 20 inches using the Society of Automotive Engineers Standard J1287 JUL98 (Commonwealth of Massachusetts Undated a). These levels approximately equate to that experienced along a busy street (*http://www.asha.org/public/hearing/Noise/*; accessed September 2016). Although the sound is present to some degree on much of the refuge, attenuation reduces the levels so that if discernable, it becomes more of a background sound on the northern portions of the division. There are few, if any, areas of the division completely devoid of motorized sounds because it is surrounded by public roads.

Currently, pedestrian visitors have no developed access during winter. People hiking, snowshoeing, or skiing have the option of using the groomed snowmobile trail or making their own snow trails. Few people hike this area because until recently it was a private sawmill.

Summary of Anticipated Impacts

In summary, many studies identify and discuss snowmobile impacts to wildlife, their habitats, and other outdoor recreational users. Clearly, snowmobiles can have an effect on wildlife when the two are in close proximity. The typical reaction of wildlife is to move into cover to avoid the disturbance. Snowmobile use on the Dead Branch Division will be restricted to the 0.2-mile section of existing trail. Based on available literature and monitoring at the nearby Nulhegan Basin Division impacts to wildlife are primarily to individual animals that come in contact with the trail when snowmobiles are present. Reactions are subject to a variety of factors, but there is no evidence that snowmobile use on this trail will not have a deleterious impact on wildlife populations at the division, nor the federal trust species (i.e. migratory birds). At this time, based on professional judgment and the available information including the limited extent of the affected area, wildlife species present during the winter, and impacted habitats, regulated snowmobile use does not materially interfere with or detract from the purposes for which the Refuge was established or the mission of the Refuge System. Snowmobile use does provide the public with an opportunity to enjoy and experience the winter landscapes and engage in wildlife-oriented recreation, including priority public uses, in support of Refuge Purpose Number 6. It also gives the refuge a chance to inform a non-traditional visitor about the Dead Branch Division, Conte Refuge, Refuge System, and Service. From the perspective of a snowmobiler and SAM, the trail on Refuge property is an important connection to the trail networks that lie beyond the Refuge boundary.

PUBLIC REVIEW AND COMMENT:

A finding of appropriateness and this compatibility determination were distributed for public comment for 90 days from August 18, 2015 to November 16, 2015 as part of the review of the Silvio O. Conte Refuge's draft CCP/EIS. Comments we received on this use were considered as we developed this final determination. This determination will undergo another 30-day review with release of the final CCP/EIS. A summary of comments received on the draft plan is included in appendix O of the final CCP/EIS.

DETERMINATION (CHECK ONE BELOW):

____ Use is not compatible

__X__ Use is compatible, with the following stipulations

STIPULATIONS NECESSARY TO ENSURE COMPATIBILITY:

The administration of snowmobile access and use on the refuge will comply with 50 CFR 27 and Massachusetts General Law 90B. The administration and management of the use as described in Section "(d)" above, and consideration, evaluation, and assessment of the impacts of the use as described in the "Anticipated Impacts of the Use" above, document our compliance with Executive Orders 11644 (Use of Off-Road Vehicles on the Public Lands, February 8, 1972) and 11989 (Off-Road Vehicles [ORV] on Public Lands, May 24, 1977) as summarized below.

(1) Specific areas and trails shall be designated where snowmobile use is either permitted or prohibited.

Public snowmobile travel on the division will be restricted to the historic, existing trail that crosses the division for approximately 0.2 miles. There also will be signs that identify the Refuge boundary on the trail and also require snowmobilers to stay on the groomed trail.

(2) Designated areas and trails shall be located to minimize damage to soil, watershed, vegetation, or other resources of the public lands.

Damage to soils and vegetation is minimal because the ground is frozen and a snow cover must be present for the use to occur; damage to water is minimized because snowmobiles travel on a hard-packed snow cover, not across water; and, damage to other resources is limited by restricting snowmobile use to the established trails.

(3) Areas and trails shall be located to minimize harassment of wildlife or significant disruption of wildlife habitats.

Wildlife harassment is minimized because: (a) trust species (i.e. migratory birds) are generally absent from the Dead Branch during the winter; (b) many resident species are dormant (e.g. black bears), under ice (e.g. beavers, muskrats, fish), or active under the snow (i.e. subnivean wildlife); (c) the trail does not intersect areas or habitats with significant concentrations of wildlife, including deer winter yards; and, (d) most active wildlife species during the winter are presumed to have acclimated to snowmobiles over the many years this trail has been in existence. The restricted area available and predictability of use, in time and space, make it reasonable to assume that resident wildlife populations can and have adapted to this long-term use.

(4) Trails shall not adversely affect the natural, aesthetic, or scenic values of the lands.

This trail will not measurably affect the natural, aesthetic, or scenic values because: (a) the amount of land directly impacted by the active trail is about 0.3 acres or about 0.3 percent of the 97.5-acre Division; (b) the trail lies adjacent to a former sawmill with considerable area cleared for buildings and log landings. The trail itself is confined to a patch of mixed hardwood forest that is common in this area; (c) the snow pack required for snowmobiling protects the ground surface, and the mechanical treatment of vegetation on the trail itself does not permanently damage plants; (d) litter associated with snowmobiling is removed by the snowmobile clubs during and at the end of the season.

(5) Operating conditions shall be directed at protecting resource values, preserving public health, safety, and welfare, and minimizing use conflicts.

Resource values are protected because snowmobile operating dates require sufficient snow pack to protect soils and vegetation from being damage. Use is discontinued if conditions become unsuitable. Public safety, health, and welfare are preserved and use conflicts minimized through the applicable provisions of 50 CFR 27.31, Massachusetts General Law 90B. Specifically, use is limited to the designated snowmobile trail, noise level limits must comply with State regulations, vehicles must meet the Federal and State standards for safe operation, reasonable and prudent operation is required, and unsafe trail conditions trigger closure. Pedestrian visitors are not precluded from using the snowmobile trail or if they prefer, may snowshoe or ski anywhere else on the division.

(6) Areas and trails where ORV use is permitted are well-marked and information about location and conditions for use are made available to the public.

Recreational snowmobile use at the Dead Branch Division is limited to the 0.2-mile section of trail near the western boundary. Standard State or refuge snowmobile trail signs will be posted at key points. The refuge boundary will be posted on both trail entry sites. Updated trail conditions are available from SAM either by phone or on their web site *(http://sledmass.com/;* accessed April 2015). Visitors also can contact the refuge to find out about current conditions. SUPs issued to local snowmobile club will contain specific special conditions that govern their operation and use of the trail.

(7) Provisions are made for law enforcement.

The Dead Branch Division is unstaffed, but a Zone Law Enforcement Officer is available. Officers from the Massachusetts Environmental Police have conducted law enforcement on this trail in the past as part of their normal duties, and will continue to do so on the division.

(8) Effects of ORV use must be monitored.

Snowmobile use on the refuge will be monitored and effects evaluated. Monitoring will be done via observations of trail use by refuge staff and the partner snowmobile club. Federal and State law enforcement patrols will help ensure that people comply with regulations to minimize biological and recreational conflicts. Condition of the trail itself will be evaluated at the end of each season and periodically during the season to ensure that unacceptable resource damage is not occurring.

(9) If it is determined that ORV use is causing considerable adverse effects on soil, vegetation, wildlife, wildlife habitat or cultural or historic resources of particular areas or trails, those areas must be closed until adverse effects are eliminated or preventive measures have been implemented to prevent recurrence.

As stated in Number 8 above, monitoring use of the trail will be an ongoing process. Because there is only one trail on the Dead Branch Division the primary resource concerns are impacts to soil, surface water, and resident winter wildlife. Refuge staff will monitor trail conditions to ensure that there is sufficient snow pack to support snowmobile use. The trail does not traverse any habitats key to wintering wildlife such as deer thermal cover; however, the trail will have limited effect on species that spend the winter under the snow surface in the utility corridor.

Should unacceptable resource impacts occur, appropriate action will be taken to alleviate problems. Actions may include more restrictive limitations on engine exhaust emissions or noise levels, limiting the number of snowmobiles on the division, and trail relocation or closure. These or other actions may be necessary in the future to ensure that snowmobile use does not materially interfere with or detract from refuge purposes or the mission of the Refuge System, as previously described. Compatibility could be reconsidered before the term of this compatibility determination should the conditions change significantly, or there is new information regarding the effects of snowmobiling that warrants an updated evaluation.

(10) Snowmobile use is only permitted during refuge open hours. A special use permit is required for use outside of one-half hour before sunrise and one-half hour after sunset.

(11) We will allow snowmobiling following MassWildlife snowmobiling guidelines, where otherwise compatible and consistent with applicable Service laws, policy, and guidelines. We would also continue to meet each year with the snowmobile clubs permitted for each respective trail to review special use permit stipulations and conditions.

JUSTIFICATION:

This use has been determined to be compatible provided the stipulations necessary to ensure compatibility are implemented, and the use does not exceed thresholds necessary for visitor safety and resource protection. This use is not expected to materially interfere with or detract from the mission of the Refuge System nor diminish the purposes for which the refuge was established, will not pose significant adverse effects on refuge resources, will not interfere with public use of the refuge, nor cause an undue administrative burden.

SIGNATURE:

Refuge Manager: _____ _____
(Signature) (Date)

CONCURRENCE:

Regional Chief: _____ _____
(Signature) (Date)

MANDATORY 10-YEAR RE-EVALUATION DATE: _____

LITERATURE CITED:

Adams, E.S. 1975. Effects of lead and hydrocarbons from snowmobile exhaust on brook trout (*Salvelinus fontinalis*). Transactions of the American Fisheries Society 2:363-373.

American Speech, Language, and Hearing Association. Undated. Noise and Hearing Loss Prevention. Accessed September 2016 at: *http://www.asha.org/public/hearing/Noise.*

Biel, M. 1999. Effects of winter recreation on habituated wildlife. *In:* Olliff, T., K. Legg, and B. Kaeding, editors. Effects of winter recreation on wildlife of the Greater Yellowstone Area: a literature review and assessment. Report to the Greater Yellowstone Coordinating Committee. Yellowstone National Park, Wyoming. 315 pages.

Braven, K.D. 2009 KLK751: Development of an ethanol fueled, two-stroke, direct-injection snowmobile for use in the clean snowmobile challenge and national parks. University of Idaho. Moscow, ID. Accessed October 2016 at: *http://www.webpages.uidaho.edu/niatt/research/Project_Descriptions/KLK751.htm*

Bunnell, K.D., J.T. Flinders, M.L. Wolfe. 2006. Potential impacts of coyotes and snowmobiles on lynx conservation in the Intermountain West. Wildlife Society Bulletin 34(3):828-838.

Caslick, J.W. 1997a. Appendix I: Impacts of winter recreation on wildlife in Yellowstone National Park: A literature review and recommendations. *In:* Olliff, T., K. Legg, and B. Kaeding, editors. Effects of winter recreation on wildlife of the Greater Yellowstone Area: a literature review and assessment. Report to the Greater Yellowstone Coordinating Committee. Yellowstone National Park, Wyoming. 315 pages.

Caslick, J.W. 1997b. Appendix III. Matrix of winter recreation effects on wildlife. *In:* Olliff, T., K. Legg, and B. Kaeding, editors. Effects of winter recreation on wildlife of the Greater Yellowstone Area: a literature review and assessment. Report to the Greater Yellowstone Coordinating Committee. Yellowstone National Park, Wyoming. 315 pages.

Christensen, S. 2011. Managing deer populations: a matter of balance. Massachusetts Department of Fish and Game. Accessed May 2013 at: *http://www.eregulations.com/massachusetts/huntingandfishing2011/managing-deer-populations/*

Clark, W. and R. Wiseman. 1999. Effects of development on wildlife. *In:* Olliff, T., K. Legg, and B. Kaeding, editors. Effects of winter recreation on wildlife of the Greater Yellowstone Area: a literature review and assessment. Report to the Greater Yellowstone Coordinating Committee. Yellowstone National Park, Wyoming. 315 pages.

Commonwealth of Massachusetts. Undated a. Massachusetts General Laws, Part I, Title XIV, Chapter 90B, Section 24 Lights; reflectors; excessive noise; noxious fumes. Accessed October 2016 at: *https://malegislature.gov/Laws/GeneralLaws/PartI/TitleXIV/Chapter90B/Section24*

Commonwealth of Massachusetts. Undated b. Code of Massachusetts Regulations 323 CMR 3.03 (2) (b). Accessed October 2016 at: *http://www.mass.gov/eea/grants-and-tech-assistance/enforcement/environmental-police/boat-and-recreation-vehicle-safety-bureau/323cmr30.pdf*

Commonwealth of Massachusetts. Undated c. Massachusetts General Laws, Part I, Title XIV, Chapter 90B, Section 24 Prohibited or limited operation by underage persons; restrictions. Accessed October 2016 at: *https://malegislature.gov/Laws/GeneralLaws/PartI/TitleXIV/Chapter90B/Section26*

Crete, M. and L. Lariviere. 2003. Estimating the costs of locomotion in snow for coyotes. Canadian Journal of Zoology 81:1808-1814.

Douglass, K. S., J. Hamann, G. Joslin. 1999. Vegetation, soils, and water. *In:* G. Joslin and H. Youmans, coordinators. Effects of recreation on Rocky Mountain wildlife: A Review for Montana. Committee on Effects of Recreation on Wildlife, Montana Chapter of The Wildlife Society. 307pp.

Freddy, D.J., W.M. Bronaugh, M.C. Fowler. 1986. Responses of mule deer to disturbance by persons afoot and snowmobiles. Wildlife Society Bulletin 14(1): 63-68.

Ingersoll, G.P. 1999. Effects of snowmobile use on snowpack chemistry in Yellowstone National park, 1998. U.S. Geological Survey. Water-Resources Investigations Report 99-4148. Denver, CO. 24pp.

Massachusetts Department of Fish and Game. Undated. More about white-tailed deer. Accessed October 2016 at: *http://www.mass.gov/eea/agencies/dfg/dfw/fish-wildlife-plants/mammals/deer-more-about.html*

Moen, A.N., S. Whittemore, B. Buxton. 1982. Effects of disturbance by snowmobiles on heart rate of captive white-tailed deer. New York Fish and Game Journal 29(2):176-183.

Musselman, R.C. and J.L. Korfmacher. 2007. Air quality at a snowmobile staging area and snow chemistry on and off trail in a Rocky Mountain subalpine forest, Snowy Range, Wyoming. Environmental Monitoring and Assessment 133:321-334.

Olliff, T., K. Legg, and B. Kaeding, editors. 1999. Effects of winter recreation on wildlife of the Greater Yellowstone Area: a literature review and assessment. Report to the Greater Yellowstone Coordinating Committee. Yellowstone National Park, Wyoming. 315 pages.

Picton, H.D. 1991. Energetic costs of wildlife displacement by winter recreationists. *In:* Olliff, T., K. Legg, and B. Kaeding, editors. Effects of winter recreation on wildlife of the Greater Yellowstone Area: a literature review and assessment. Report to the Greater Yellowstone Coordinating Committee. Yellowstone National Park, Wyoming. 315 pages.

Ruzycki, J. and Lutch, J. 1999. Impacts of two-stroke engines on aquatic resources. *In:* Olliff, T., K. Legg, and B. Kaeding, editors. Effects of winter recreation on wildlife of the Greater Yellowstone Area: a literature review and assessment. Report to the Greater Yellowstone Coordinating Committee. Yellowstone National Park, Wyoming. 315 pages.

Sacklin, J.A., K.L. Legg, M.S. Creachbaum, C.L. Hawkes, G. Helfrich. 2000. Winter visitor use planning in Yellowstone National Park and Grand Teton National Parks. *In:* Cole, David N.; McCool, Stephen F.; Borrie, William T.; O'Loughlin, Jennifer, comps. 2000. Wilderness science in a time of change conference, Volume 4: Wilderness visitors, experiences, and visitor management; 1999. May 23–27; Missoula, MT. Proceedings RMRS-P-15-VOL-4. Ogden, UT: U.S. Department of Agriculture, Forest Service, Rocky Mountain Research Station.

Snowmobile Association of Massachusetts. Undated a. Committed to enhancing safe snowmobiling in Massachusetts. Accessed July 2013 at: *http://sledmass.com/about-2/.*

Stangl, J.T. 1999. Effects of winter recreation on vegetation. *In:* Olliff, T., K. Legg, and B. Kaeding, editors. Effects of winter recreation on wildlife of the Greater Yellowstone Area: a literature review and assessment. Report to the Greater Yellowstone Coordinating Committee. Yellowstone National Park, Wyoming. 315 pages.

U.S. General Accounting Office (GAO). 2000. Agencies Need to Assess the Impact of Personal Watercraft and Snowmobile Use. GAO/RCED-00-243.

U.S. Department of Interior, Fish and Wildlife Service (USFWS). 2000. Little Pend Oreille National Wildlife Refuge Final Comprehensive Conservation Plan and Environmental Impact Statement.

U.S. Department of Interior, National Park Service (NPS). 2000. Air quality concerns related to snowmobile usage in national parks. Denver, CO.

____. 2013. Yellowstone in winter: the role of snowmobiles and snowcoaches. Yellowstone National Park, WY. Accessed October 2016 at: *http://www.nps.gov/yell/parkmgmt/role.htm*

U.S. General Accounting Office (GAO). 2000. Agencies need to assess the impact of personal watercraft and snowmobile use. Report to Congressional Requesters GAO/RCED-00-243. Washington, D.C. 85pp.

University of Wyoming, Institute for Environment and Natural Resources. 2000. Review of research related to the environmental impact statement for the Yellowstone and Grand Teton National Parks and the John D. Rockefeller, Jr. Memorial Parkway. Laramie, WY. 83pp.

White, P.J., T. Davis, J.J. Borkowski, R.A. Garrott, D.P. Reinhart, and D.C. McClure. 2006. Behavioral responses of wildlife to snowmobiles and coaches in Yellowstone. Yellowstone National Park and Montana State University, Bozeman, MT. Accessed October 2016 at: *http://www.nps.gov/yell/parkmgmt/upload/2006wildliferpt_final.pdf*

FWS Form 3-2319
02/06

FINDING OF APPROPRIATENESS OF A REFUGE USE

Refuge Name: Silvio O. Conte National Fish and Wildlife Refuge

Use: Snowmobiling on Designated Snowmobile Trails on the Nulhegan Basin Division

This form is not required for wildlife-dependent recreational uses, take regulated by the State, or uses already described in a refuge CCP or step-down management plan approved after October 9, 1997.

Decision Criteria:	**YES**	**NO**
(a) Do we have jurisdiction over the use?	✔	
(b) Does the use comply with applicable laws and regulations (Federal, State, Tribal, and local)?	✔	
(c) Is the use consistent with applicable Executive orders and Department and Service policies?	✔	
(d) Is the use consistent with public safety?	✔	
(e) Is the use consistent with goals and objectives in an approved management plan or other document?	✔	
(f) Has an earlier documented analysis not denied the use or is this the first time the use has been proposed?	✔	
(g) Is the use manageable within available budget and staff?	✔	
(h) Will this be manageable in the future within existing resources?	✔	
(i) Does the use contribute to the public's understanding and appreciation of the refuge's natural or cultural resources, or is the use beneficial to the refuge's natural or cultural resources?		✔
(j) Can the use be accommodated without impairing existing wildlife-dependent recreational uses or reducing the potential to provide quality (see section 1.6D, 603 FW 1, for description), compatible, wildlife-dependent recreation into the future?	✔	

Where we do not have jurisdiction over the use ["no" to (a)], there is no need to evaluate it further as we cannot control the use. Uses that are illegal, inconsistent with existing policy, or unsafe ["no" to (b), (c), or (d)] may not be found appropriate. If the answer is "no" to any of the other questions above, we will generally not allow the use.

If indicated, the refuge manager has consulted with State fish and wildlife agencies. Yes ✔ No ____.

When the refuge manager finds the use appropriate based on sound professional judgment, the refuge manager must justify the use in writing on an attached sheet and obtain the refuge supervisor's concurrence.

Based on an overall assessment of these factors, my summary conclusion is that the proposed use is:

Not Appropriate _____ **Appropriate** ✔

Refuge Manager: _____ Date: _____

If found to be **Not Appropriate**, the refuge supervisor does not need to sign concurrence if the use is a new use.

If an existing use is found **Not Appropriate** outside the CCP process, the refuge supervisor must sign concurrence.

If found to be **Appropriate**, the refuge supervisor must sign concurrence:

Refuge Supervisor: _____ Date: _____

A compatibility determination is required before the use may be allowed.

603 FW 1
Exhibit 1
Page 2

JUSTIFICATION FOR A FINDING OF APPROPRIATENESS OF A REFUGE USE

Refuge Name: Silvio O. Conte National Fish and Wildlife Refuge

Use: Snowmobiling on Designated Snowmobile Trails on the Nulhegan Basin Division

NARRATIVE:

Vermont contains an extensive Statewide snowmobile trail system (SSTS) which is administered by the Vermont Association of Snow Travelers. Several miles of this trail network occur on the Nulhegan Basin Division and the McConnell Pond tract, which is proposed for acquisition under the preferred alternative of the Silvio O. Conte National Fish and Wildlife Refuge's (Conte Refuge) Comprehensive Conservation Plan (CCP). Snowmobile recreation is a critical part of the local economy during winter months in this portion of northeastern Vermont. The refuge is often covered with snow from November to April. The snowmobile trail provides a means of controlled access to the refuge in the winter months, and can provide an opportunity for visitors to engage in wildlife-dependent recreation, such as wildlife observation and hunting. This use may contribute to public understanding of, and appreciation for, the refuge's natural resources by providing opportunities for participants to experience the refuge, see refuge habitats, and support wildlife-dependent recreation during winter when access to the majority of the refuge is otherwise limited.

The existing snowmobile trail network was established well before the division was created in 1999. The overwhelming majority of the network lies along gravel roads that are open to passenger vehicle travel during the non-winter months, while the remaining length follows "grass" roads, which were originally used by commercial trucks to haul logs during winter. Due to the season of use, potential impacts are minimized because the ground is frozen and fewer species and fewer numbers of wildlife are present. This is an historic use of the division, and is consistent with the environmental assessment prepared for the division's establishment (USFWS 1999). This use has been allowed on the refuge since the refuge was established with no significant adverse effects observed in terms of public safety (one reportable accident in tens of thousands of visits). We do not anticipate any major conflicts between snowmobilers and other users, because although pedestrians (cross-country skiers/snowshoers) will be allowed on the snowmobile trail network, such use is expected to be light as there are additional pedestrian-specific trails available during the winter.

For these reasons, we have determined that continuing to allow this use is consistent with the U.S. Fish and Wildlife Service's policy on the appropriateness of refuge uses (603 FW 1).

This finding of appropriateness and the compatibility determination for this use was distributed for public comment for 90 days from August 18, 2015 to November 16, 2015 as part of the review of the Silvio O. Conte Refuge's draft CCP/EIS. Comments we received on this use were considered as we developed this final determination. A summary of comments received on the draft plan is included in appendix O of the final CCP/EIS. This finding will undergo another 30-day review with release of the final CCP/EIS.

REFERENCE:

U.S. Fish and Wildlife Service (USFWS). 1999. Final Environmental Assessment: U.S. Fish and Wildlife Service Participation in a Partnership to Protect "the Champion Lands" in Essex County, Vermont–Options for Protecting the Nulhegan Basin Special Focus Area. 78pp.

COMPATIBILITY DETERMINATION

USE:

Snowmobiling on Designated Snowmobile Trails on the Nulhegan Basin Division

REFUGE NAME:

Silvio O. Conte National Fish and Wildlife Refuge (Conte Refuge)

DATE ESTABLISHED:

October 3, 1997

ESTABLISHING AND ACQUISITION AUTHORITY(IES):

- Silvio O. Conte National Fish and Wildlife Refuge Act (Public Law 102-212).
- Migratory Bird Conservation Act of 1929.
- Land and Water Conservation Fund Act of 1965.

REFUGE PURPOSE(S):

- To conserve, protect, and enhance the Connecticut River populations of Atlantic salmon, American shad, river herring, shortnose sturgeon, bald eagles, peregrine falcons, osprey, black ducks, and other native species of plants, fish, and wildlife.
- To conserve, protect, and enhance the natural diversity and abundance of plant, fish and wildlife species and the ecosystem upon which these species depend within the refuge.
- To protect species, listed as endangered or threatened, or identified as candidates for listing, pursuant to the Endangered Species Act of 1973 (ESA) as amended (16 U.S. 1531 et seq.).
- To restore and maintain the chemical, physical, and biological integrity of wetland and other waters within the refuge.
- To fulfill the international treaty obligations of the United States relating to fish and wildlife and wetlands.
- To provide opportunities for scientific research, environmental education, and fish and wildlife oriented recreation and access to the extent compatible with the other purposes stated in this section.

NATIONAL WILDLIFE REFUGE SYSTEM MISSION:

To administer a national network of lands and waters for the conservation, management, and where appropriate, restoration of the fish, wildlife, and plant resources and their habitats within the United States for the benefit of present and future generations of Americans.

DESCRIPTION OF USE:

(a) What is the use? Is the use a priority public use?
The use is public snowmobile access on and through the Nulhegan Basin Division (division) of the Silvio O. Conte National Fish and Wildlife Refuge (refuge), on existing Vermont Statewide Snowmobile Trail System (SSTS) trails. It is not a priority public use of the National Wildlife Refuge System (Refuge System), under the National Wildlife Refuge System Administration Act of 1966 (16 U.S.C. 668dd-668ee), as amended by the National Wildlife Refuge System Improvement Act of 1997. This compatibility determination pertains only to

non-commercial snowmobile access and use on the division by the public; commercial snowmobile tours are a different use and would need to be considered separately.

(b) Where would the use be conducted?
Snowmobile use is currently permitted on the division as part of the Vermont SSTS. This use predated U.S. Fish and Wildlife Service (Service) acquisition of the division in 1999 and was approved in the environmental assessment (USFWS 1999) establishing the division and in a corresponding compatibility determination. The 33-mile trail network on existing refuge lands has remained constant in location and extent since the land was acquired. The SSTS on the division provides multiple connective links that enable snowmobile access to surrounding public and private lands.

Under our Service-preferred alternative C, the division will be expanded via acquisition of the McConnell Pond tract, among other parcels. Under this scenario, we propose a network of trails totaling approximately 40 miles (map D.5). The overwhelming majority (more than 98 percent) of the snowmobile trails are located on existing gravel roads. In addition, a new trail segment of approximately 1.4 miles is proposed to link the division's visitor contact station with the main trail network. This will occur primarily on private land, with less than 600 feet of new trail on refuge land. The refuge segment will be on an upland site immediately south of Vermont Route 105. An approximately 2-mile reduction among the existing trail network is proposed to offset this addition. This would include a narrow wooded trail segment occurring on native ground and reduction of one-half of a small loop trail.

(c) When would the use be conducted?
Use of the SSTS on the division is permitted from December 15 to April 15, dependent upon acceptable levels of snow cover. Snowmobile access and trail grooming are permitted during daytime and nighttime hours. When snowmelt exposes road surfaces, entrance gates on division roads are closed and locked for the duration of the spring mud season and further snowmobile access is prohibited. This is similar to what occurs on neighboring lands that allow snowmobiles. General trail maintenance activities such as brush cutting and the removal of downed trees also may be performed occasionally during the late summer and fall.

(d) How would the use be conducted?
The SSTS and its use are administered by the Vermont Association of Snow Travelers, Inc. (VAST). State law requires compliance with Title 23 ("Snowmobile Laws") of the Vermont Statutes, which includes provisions for annual registration and insurance, and requirements for lawful operation and use of snowmobiles on private and public lands. Throughout the SSTS, local snowmobile clubs are responsible for maintaining trails within the clubs' designated areas of operation. Purchase of an annual local club membership and Trails Maintenance Assessment permit (TMA) are required by the State for use of the SSTS. Club membership receipts fund equipment and trail maintenance in the club's area of operation, and revenues from TMA purchases allow VAST to administer the SSTS, and are disbursed to local club trail maintenance projects and equipment needs. Lastly, revenue generated from snowmobile registrations is distributed to VAST and public safety agencies (Vermont State Police, Vermont Fish and Wildlife Department (VFWD), County Sheriff's Departments) for law enforcement efforts within the SSTS. Purchase of a TMA grants the holder permission to use the SSTS (including the portion located on the division) by virtue of the local clubs having secured prior permission from landowners for trail placement on their lands.

Snowmobile access and use will be conducted according to applicable provisions of 50 CFR 27.31 ("General Provisions Regarding Vehicles"), Title 23 of the Vermont Statutes, and Executive Orders 11644 *(Use of Off-Road Vehicles on the Public Lands,* February 8, 1972) and 11989 *(Off-Road Vehicles on Public Lands,* May 24, 1977) - (see discussion of compliance with Executive Orders under the "Stipulations to Ensure Compatibility" section, below). Use and maintenance of the SSTS on the refuge is administered through an annual Special Use Permit (SUP) collectively issued to VAST and three local snowmobile clubs: Brighton Snowmobile Club, Northeast Kingdom Snowblasters, and Canaan Border Riders, Inc. The Service requires VAST to carry $2 million of general liability insurance with the United States of America named as an "Additional Insured." Local clubs and VAST are collectively responsible for accomplishing trail maintenance and infrastructure repair. The refuge requires local clubs to place trail junction, trail number, safety, and speed limit signs–at locations designated by the refuge manager–prior to December 15, and maintain them through the period of snowmobile use. Signs are collected prior to refuge roads opening in the spring. Local clubs smooth trail surfaces with tracked groomers equipped with 12-foot, straight, front plow blades and drags 9 feet in width

and 12 feet in length. The approximate weight of a groomer with this equipment is 6 tons. Trails are typically groomed to a width of 10 to 16 feet depending on the underlying road width and snow conditions. Grooming typically occurs on the division 4 to 6 days per week depending on the weather, snowfall, and trail conditions; a given trail is generally groomed once each week. Grooming generally occurs at night. In late summer or fall, clubs maintain trails, as necessary, by cutting back woody brush that restricts trail width, and by removing trees that may have fallen across trails. Under the SUP, use of all-terrain vehicles (ATVs) by club members is authorized for trail maintenance and to install signs only when and where travel by pickup truck is not feasible (e.g., during mud season). The SUP does not provide for new trail construction (the trail proposed to access the visitor contact station is evaluated in the companion Comprehensive Conservation Plan/Environmental Impact Statement (CCP/EIS).

The refuge manager and representatives from Vermont Agency of Natural Resources, Plum Creek Timber Company, VAST, and local snowmobile clubs meet annually to discuss use of the SSTS-designated trail network on their lands. Locations of approved trails are depicted on Essex County and Vermont snowmobile trail maps. Designated SSTS routes on the refuge have remained constant since the lands were acquired. Modifications of SSTS routes on the refuge must be coordinated prior to the upcoming season between the refuge manager and officials from VAST and local clubs, or as public safety, environmental, or management circumstances dictate during the snowmobiling season.

The maximum speed limit for snowmobiles on the refuge is 35 miles per hour. This is consistent with speed limits on adjacent ownerships and on State-owned lands elsewhere in Vermont. A "reasonable and prudent" snowmobile operation (Vermont) statute is in effect—such operation also is addressed in 50 CFR 27.31. Off-trail travel is not permitted. There are no time-of-day restrictions; however, use occurs primarily during daylight hours, and the majority of travel occurs between approximately 12 p.m. and 6 p.m. according to analysis of traffic counter data and refuge staff observations. Snowmobilers typically travel in groups of two or more snowmobiles.

Snowmobiles may also be used to access the approximately 30 privately owned recreational cabins that exist within current and proposed refuge lands. Most owners do not visit their cabin during the winter, although a handful of cabin owners regularly do so. While a majority of these cabins are located adjacent to the SSTS, several are not. A refuge SUP is required to access cabins not immediately on the SSTS. The SUP requires access via the most direct route, approved in advance, from the nearest SSTS or public highway. It is expected that fewer than five SUPs will be issued each year.

(e) Why is this use being proposed?
All of the existing designated snowmobile trails were established decades prior to Service acquisition. The previous landowners allowed public snowmobile use of these trails and snowmobile recreation is a critical part of the local economy during winter months. The division receives an average of 85 to more than 100 inches of snow annually, and the ground can be covered with snow from November to April. Snowmobile trails provide a means of controlled access to the refuge during winter months, and can provide an opportunity for visitors to engage in wildlife-dependent recreation, such as wildlife observation and hunting. The existing trails also provide winter access to a broader landscape of conserved lands including holdings by Plum Creek Timber Company, and the State of Vermont.

At the time the division was acquired, local citizens, adjoining land owners, and State government officials were concerned about the Service's intentions regarding the future of snowmobile access–and many continue to harbor concerns. As a condition of support for Service acquisition of lands in the Nulhegan Basin, citizens and partners wanted assurances of which uses would be allowed, due in part to the great economic importance of snowmobiling to the Northeast Kingdom, and the associated role of the SSTS on these former industrial timber lands.

The Service signaled its intention to continue snowmobile access, if compatible, in the document "A Conservation Partnership for the Nulhegan Basin and Paul Stream Area - Public Ownership by the Vermont Agency of Natural Resources and the United States Fish and Wildlife Service - January 28, 1999" (see Appendix 3 of the Nulhegan Basin Division Environmental Assessment, USFWS 1999). Language in the document also explicitly stated the Service's commitment "...to provide access to wildlife-dependent and other compatible recreation purposes." The Service's position in this conservation partnership was explicitly based on

the fact that snowmobile access and use on the division must be determined to be a compatible use (603 FW 3), and if indeed determined as compatible, the use must be managed to ensure continued compatibility.

Snowmobiling is a popular winter activity in Vermont and retaining access to the division would allow introduction of the division, the Refuge System, and the Service to people that may not traditionally recreate on refuges. Snowmobile access provides the visiting public with an efficient means of winter transport onto and through the division, the opportunity to engage in wildlife-dependent recreation activities, and extends the Service's reach to those people who come from throughout the New England to snowmobile in northeastern Vermont. Refuge staff have observed visitors on snowmobiles that were engaged in wildlife observation (sight and sign), photography (wildlife and scenery), snowshoe hare hunting, trapping, interpretation (habitat management signage, experiencing viewsheds of conserved habitats and basin topography from scenic vistas). In addition, visitors were observed to have traveled to certain locations on the refuge via snowmobile and then continued their travel on snowshoes or cross-country skis. We also provide kiosks with refuge information and interpretive materials at the three main entrances used by snowmobilers to help orient visitors to the Refuge System and refuge and provide information on refuge wildlife and habitats. Also, under the Service-preferred alternative in the draft CCP/EIS, we propose creating a connector snowmobile trail to the division's headquarters office and visitor contact facility, which includes interpretive materials and other information about refuge resources.

AVAILABILITY OF RESOURCES:

The resources necessary to provide and administer this use are available within current and anticipated refuge budgets. Staff time associated with administration of this use includes: issuing annual permits to VAST and local snowmobile clubs, general oversight of trail maintenance activities, monitoring compliance with permit conditions, enforcement of trail regulations, monitoring use patterns, monitoring potential impacts of the use on refuge resources and visitors, and providing information to the public about the use. Currently the program is administered by the wildlife refuge manager, with assistance from the wildlife biologist and federal wildlife officer.

Annualized costs associated with the administration of snowmobile access on the refuge are estimated below:

Issue and administer SUPs/Coordinate with VAST and local clubs (Wildlife Refuge Manager)	$880
Law enforcement - patrol/visitor-resource protection/public use monitoring/enforcement/outreach (Federal Wildlife Officer)	$10,800
Resource impacts/monitoring/evaluation (Wildlife Biologist)	$2,500
Snowmobile gas/maintenance	$2,500
Total	**$16,680**

The estimated costs listed above are predominantly salary costs. Monitoring visitation and the impacts of public uses on resources, and providing law enforcement are required for properly administering public use programs; therefore, these operations are accounted for in budget and staffing. In addition to Service officers, law enforcement coverage on the division during critical periods is often provided, at no cost to the Service, by officers from our partner agencies: VFWD, Vermont State Police, and Essex County Sheriff's Department.

No special facilities or resources are needed to administer this use. Maintenance of the SSTS on the division is conducted as needed by the snowmobile clubs; the refuge incurs no expense from these activities. Any road maintenance activities financed by the refuge during the summer or fall are performed to properly maintain roads for automobile travel, and with the exception of bridge or large culvert work, have, at most, an indirect benefit for snowmobile travel. Therefore, costs for road maintenance are not relevant for analyzing costs incurred due to snowmobile use of the division.

ANTICIPATED IMPACTS OF THE USE:

Continuing to allow snowmobile access to the division will allow the public to visit areas that are otherwise difficult to access during the winter months. Potential negative impacts of snowmobile use include habitat damage, pollution, and disturbance to wildlife. Informational kiosks and interpretive panels will inform visitors of the division and refuge's role in wildlife conservation within the Connecticut River watershed and northern New England.

Monitoring efforts have included a multi-year visitor use study, a wildlife impact study, an investigation of potential snowmobile-generated pollution, annual traffic monitoring, and incidental monitoring by staff. Visitor use of the division has been measured by Dr. John Davis of University at Albany, State University of New York (SUNY); potential impacts on wildlife from snowmobiling were studied by the Northwoods Stewardship Center; the division was included in a Statewide pollution study by VAST, and refuge staff has monitored snowmobile use annually since 2001. Traffic counter data and modeling estimate upwards of 14,000 snowmobile visits per season (J. Davis, unpublished report). This level of use has been relatively consistent over the years. However, snow conditions at the division compared to conditions in southern New England, season length, and perhaps fuel costs can all influence the amount of snowmobiling activity. Weekends account for roughly half the use, with 37 percent of visits occurring on Saturdays alone.

The SUNY study distributed visitor survey cards during this multi-year visitor use study. Survey response was low; however, data for 2001 and 2002 described the activities of 109 respondents. In addition to snowmobiling, 42 of 109 respondents (approximately 37 percent) listed wildlife observation and photography as reasons for their visit.

The potential impacts are discussed in more detail below.

Soil impacts: The snowmobiling season begins no earlier than December 16–and officially commences only when sufficient snow cover is present to allow for the grooming of trails and safe operation of snowmobiles. During the time that snowmobiles and trail groomers operate, the trails are covered with several inches to a foot or more of snow. Consequently, snowmobiles and groomers are not anticipated to have negative impacts on soils or to result in soil erosion. Trail maintenance occurs during the summer and fall. This is an occasional (i.e., less than annual) occurrence and includes mowing, culvert replacement, and bridge re-decking. Because more than 98 percent of the trail network overlays gravel roads, the majority of these maintenance activities likewise occur on or along roads. Consequently, any impacts to soils would be minimal and likely only involve previously disturbed soils, such as replacing a culvert within an existing road prism.

Water quality impacts: The impacts of snowmobile exhaust on aquatic systems have not been well studied, but fish can acquire and accumulate hydrocarbons (Olliff and Kaeding 1999). Adams (1975) found hydrocarbon levels and lead to be at high levels the week after ice out in a Maine pond where snowmobiles were driven over ice during the previous winter. Lead no longer is an additive in gasoline, and therefore, not a concern. Repeated packing of snow during grooming can accumulate pollutants on developed trails which are then released during spring runoff (Olliff and Kaeding 1999). The effects of snowmobile exhaust on aquatic invertebrates have received little attention.

The concentration of hydrocarbons in snow is likely to be particularly high on trails were regular grooming constantly packs exposed snow (Oliff et al. 1999). Spring snowmelt may release those hydrocarbons into streams and other bodies of water (Oliff et al. 1999). A Statewide 2010 study commissioned by VAST (VHB Pioneer 2010) evaluated snowpack chemistry to detail the presence or absence of impacts from snowmobile traffic on the chemical composition of snowpack, soil, and runoff in the proximity of heavily traveled snowmobile trails. Two of the sample sites were on refuge trails. Snowmelt and runoff chemistry monitoring indicated no detectable levels of volatile organic compounds or total petroleum hydrocarbons in surface waters located immediately down-gradient of the snowmobile trails. Furthermore, snowpack chemistry monitoring indicated no detectable levels of volatile organic compounds or total petroleum hydrocarbons in background or on-trail snow sampling stations. Results showed no change in water chemistry for any of the sites sampled, including those on the refuge. Although this was a wide-ranging study, it only covered a single season. Therefore, additional replication would be useful to further assess the risk of hydrocarbon to refuge waters. However, based on the available data with a representative sampling of snowmobile use on the refuge,

improvements in snowmobile technology to favor 4-stroke engines, and the substantial water volumes involved, the pollutant impacts to waters are expected to be minimal.

Air quality impacts: Within the last 10 years manufacturers, responding in part to calls for quieter and cleaner burning snowmobiles, have brought direct injection, two-stroke and four-stroke engines to market. Two-stroke engines are commonly preferred for their better power to weight ratio (*http://www.webs1.uidaho.edu/niatt/research/Project_Descriptions/KLK751.htm*: accessed May 2013), although advancements in four-stroke technology has improved their performance.

Two-stroke carbureted snowmobile engines emit pollutants, particularly hydrocarbons and particulate matter, through exhaust systems from an incomplete combustion of fuel and oil (USDI, NPS 2000, GAO 2000). Four-stroke engines are cleaner, but still produce similar levels of carbon monoxide and oxides of nitrogen (University of Wyoming 2000). In 2002, the market introduced direct injection two-stroke snowmobiles that emit fewer pollutants than the carbureted versions. In fact, these engines can cut hydrocarbon emissions by about 70 percent (USDI, NPS 2000). According to information cited by the U.S. General Accounting Office (2000), the National Park Service concluded, primarily through analyses of studies in Yellowstone and Grand Teton National Parks that snowmobiles caused increased levels of air pollution. At that time, traditional two-stroke engines were the only versions readily available. On an average day in Yellowstone National Park during the 1990s over 700 snowmobiles entered the park (USDI, NPS 2000) with peak day use exceeding 2,000. The park averaged 66,619 snowmobile visits annually from 1992 to 1999. Up to one-third of the fuel can pass through the snowmobile's exhaust, unburned (University of Wyoming 2000). Two-stroke snowmobiles reportedly produced 68 to 90 percent of the hydrocarbons and 35 to 69 percent of carbon monoxide emissions at those parks during the winter (USDI, NPS 2000). In response to concerns including air pollution, Yellowstone National Park is phasing in limits on the number and type of snowmobiles that will be allowed to enter the park in the future (*http://www.nps.gov/yell/planyourvisit/winteruse.htm*; accessed May 2013)

A study cited in the Final CCP for the Little Pend Orielle National Wildlife Refuge (USFWS 2000) in northeastern Washington stated that average snowmobile emission per hour is 216 grams of hydrocarbons and nitrous oxide and 564 grams of carbon monoxide per horsepower. Reportedly, a 54-horsepower two-stroke, carbureted snowmobile engine was estimated to emit approximately 360 times as much pollution per hour as an automobile. It should be noted that this information is based on the higher polluting, traditional two-stroke engines. Other studies cited in the Little Pend Orielle CCP claimed that such air pollutants can result in foliar injury (damage to plant leaves), reduced productivity, tree mortality, decreased growth, altered plant populations, modifications in species diversity, increased susceptibility to pests and diseases, and pollutant depositions that melt into streams during spring snow melt. Neither the exposure levels nor duration necessary to cause these effects were stated. These impacts were derived from a literature source and the CCP does not say whether these impacts were evident on the refuge.

With the exception of the water quality study mentioned previously, there has been no additional evaluation of snowmobile emissions at the division, such as those involving air quality. This would include the effects of snowmobile exhaust emissions on habitat or wildlife, but the types of vegetative impacts described in the Little Pend Orielle Refuge CCP are not apparent at the division. Studies at Yellowstone National Park found that outside of the high concentration areas around West Yellowstone and Old Faithful, snowmobiles were not substantially affecting atmospheric deposition of the principal pollutants (Ingersoll 1998). This author reported diminished levels of carbon monoxide, a primary emission compound from two-stroke snowmobiles, at monitoring stations 20 and 100 meters from park entry points. Adverse effects to air quality are not anticipated from this use for several reasons: impacts to vegetation as noted elsewhere have not been observed, the amount of snowmobile use is much less than that reported from some of the other locales, and the fraction of four-stroke snowmobiles is expected to increase into the future.

Habitat impacts: Maintaining snowmobile access on 39.2 miles of existing gravel roads and 0.8 miles of "grass" roads (grass roads are typically densely covered with low grasses and forbs; they were used under previous ownership to haul logs during winter) within the division (and adjacent McConnell Pond tract if purchased by the refuge in the future) will not impact wildlife habitat directly as gravel roads generally do not represent quality wildlife habitat. The grass roads may be used by subnivean species on occasion; however, they constitute an extremely small portion of the trail network when compared to the larger division land base. Potential surface damage to roads is considered inconsequential because snowmobile travel occurs on snowpack ranging from several inches to several feet in depth. All stream crossings occur on bridges placed for the purposes of

vehicular travel. When snowmelt exposes road surfaces, trails are closed and refuge roads are gated and locked for the duration of mud season. Trail grooming occurs on a snow-covered surface; under normal circumstances, groomers are not making direct contact with the ground.

Annual road maintenance in support of passenger vehicle travel on the division–cleaning ditches, mowing roadside vegetation, and improving drainage–represents the extent of trail maintenance associated with snowmobile travel. These activities are conducted in late summer and early fall to avoid impacts to nesting birds. No federally listed plant species are known to occur on the division. State-listed (e.g., auricled twayblade) or rare plants are not impacted by the use (actual snowmobile travel or road maintenance) because these plants do not occur on roads or roadsides. Snowmobile use is limited to existing gravel and grass surfaced roads. Based on law enforcement patrols, little unauthorized off-trail use occurs, with most unauthorized use occurring on roads that may be open to the public during summer, but are closed to snowmobiles during winter. The continued use of snowmobiles is not expected to have noticeable adverse impacts to refuge habitats outside of the footprint of the existing road network.

Wildlife impacts: As proposed, the area on the division encompassed by the SSTS totals approximately 67 acres, or about 0.2 percent of the total area. Snowmobile trails traverse the spruce-fir, northern hardwood, and mixed conifer/hardwood habitats that are typical on the division. Wildlife species occurring in these habitats include: various migratory birds (many of which will have migrated to southern wintering areas), resident birds (including spruce and ruffed grouse, jays, ravens, woodpeckers), snowshoe hare, moose, white-tailed deer, small mammal species, and various furbearers. Black bears, reptiles and amiles per houribians, beavers, and several fish species, including brook trout also occur in habitats traversed by SSTS trails, but these species normally are hibernating or under ice when snowmobiling occurs. For those resident and over-wintering bird species, we do not anticipate habitat impacts related to snowmobiling, nor do we expect a significant change in the use of habitats related to snowmobiling because this is a pre-existing use, limited to a well-defined trail network (off-trail riding is not allowed) and a local study was inconclusive (Benoit et al. 2008).

Winter is a particularly stressful time for many species of resident wildlife, because of the reduced availability and quality of food, and the higher energetic costs of snow travel and thermoregulation. Late winter is a particularly vulnerable time for many species (especially ungulates), because snow depths are often greatest, the animals are in their poorest condition, and food resources have been exhausted. A portion of the largest historic deer wintering area in the State occurs in the southwestern area of the division and extends into the McConnell Pond tract. Snowmobile trails are adjacent to or within the vicinity of this wintering habitat, and may impact wintering deer, although the literature is mixed as described below.

Snowmobiles are capable of covering great distances and thus have the potential for disturbing wildlife and compacting snow over a large area if they are not confined to designated trails (Hammitt and Cole 1998). Some potential negative impacts of snowmobiling (and other forms of human disturbance) on wildlife include:

- *Increased energy expenditure:* Disturbance may result in increased heart rate, activity, or actual flight, all of which have an energetic cost. During severe winters or for animals in poor or marginal condition, the additional stress of disturbance may result in exhaustion of an individual's food reserves and lowered resistance to disease or predation, therefore adversely affecting survival or reproduction. Herbivores, especially ungulates, operate at an energy deficit, depending on stored body reserves during winter because high quality food is not readily available (Picton 1999). Additional stress caused by recreationists flushing them from winter habitat can increase susceptibility to disease and predation, lead to higher mortality rates, and reduce productivity.

- *Displacement to suboptimal habitat:* Animals may be forced into habitats where foraging or cover is of lower quality. This may increase energetic costs, increase vulnerability to predation, or increase crowding and disease transmission. It may also alter the distribution of animals on the landscape.

- *Alteration of behavior:* Disturbed animals may change their foraging times to periods when energy losses or exposure to predators is higher.

- *Improved predator access:* The packed snow associated with a groomed snowmobile trail network can allow easier access for predators, such as coyote and bobcat (Buskirk et al. 1999). Such enhanced access could have consequences for wintering deer. Additionally, this can decrease the competitive advantages of predator species adapted to deep snow, such as lynx (Buskirk et al. 1999).

- *Direct mortality from snowmobile-wildlife collisions:* Reports of collisions on the refuge are infrequent. A moose was struck and later euthanized during the 2011-12 season (J. Dukette, VFWD, pers. comm.), although this is the only recognized instance of a collision in the past six years.

Some potential positive impacts of snowmobiling and other forms of human disturbance on wildlife follow:

- *Reduced energy expenditure:* Snow compaction related to the establishment of snowmobile trails may reduce energy expenditure in deep snow for animals that follow snowmobile trails.

- *Improved access to resources:* Snow compaction related to the establishment of snowmobile trails may expand access to foraging areas for animals using trails.

Although a moderately extensive body of literature evaluates the impacts of snowmobile activity on wildlife, particularly ungulates, the site-specific nature of much of the research and the complex interactions among the factors affecting wildlife make interpreting results and extrapolating them for the division difficult. The differences in methodology among studies make comparisons difficult and have compounded the problem. As a result, different studies have found apparently contradictory results that seem to be applicable only locally. This includes a 2-year study conducted on the division by Benoit et al. (2008) involving a comparison of animal track activity adjacent to trails open to snowmobiling and trails closed to snowmobiling. The data were conflicting, with the overall abundance of tracks and richness of species variable between trail types, hence the results proved inconclusive.

A few of the variables that may affect the type and degree of wildlife response to snowmobiles include the:

- Severity of winter snow conditions.
- Type of vegetation or habitat.
- Topography.
- Time of day and month of year.
- Level of habituation to disturbance.
- Animal age and condition.
- Species.
- Animal density and group size.
- Animal activity type (standing versus bedded down).
- Intensity of hunting.
- Intensity of snowmobile activity.
- Duration of disturbance.
- Behavior of snowmobile users.

Mammals may show less of an overt response to human disturbance when winter conditions are particularly severe and energy conservation is at its most critical (Knight and Cole 1995). Impacts may be at the individual or population scale and may be either short- or long-term.

Despite the apparent contradictions in the literature, many studies seem to indicate that snowmobiling may affect wildlife under certain conditions. Although population level impacts may exist, only impacts at the individual and local level have been demonstrated. Restricting travel to designated trails and avoiding important habitat areas can mitigate many of the negative effects.

Canada lynx

The division has recently been documented as supporting reproduction of Canada lynx, a federally threatened species. Landscapes that support persistent populations of breeding Canada lynx are located within boreal forests that contain a mosaic of differing successional forest stages, along with the following characteristics:

- Abundant snowshoe hares and their preferred habitat, which include dense understories of young trees. Snowshoe hares are the primary food source for Canada lynx and hare density is considered the most important factor in explaining lynx distribution. It is generally believed that at least 0.2 hares per acre are required to support breeding populations of Canada lynx (Ruggiero et al. 2000);

- Winter snow conditions that are deep and fluffy for extended periods of time, because these conditions are thought to favor Canada lynx over their principal competitor, the bobcat;
- Sites for denning that have abundant coarse woody debris, such as downed trees and root wads; and
- Matrix habitat that facilitates Canada lynx travel between areas of high snowshoe hare abundance within established home ranges.

We are not aware of studies addressing direct impacts of snowmobile use on Canada lynx; however, studies of other predators and their use of snowmobile trails demonstrate potentially increased competition for prey. Studies of other predators show an increase in use of trails and competition for prey in lynx winter habitat in Canada, Alaska, and western U.S., although there is no evidence that this competition from coyote or bobcat negatively affects lynx populations in the core of their range. The Service stated in its decision to list the Canada lynx as a threatened species under the ESA (Federal Register Vol. 65(58): 16051-16086), that "packed snow trails facilitate the movement of coyotes into formerly inaccessible deep snow habitats occupied by lynx; however, we have no evidence that competition with coyotes, mountain lions or bobcats is negatively affecting lynx at a population-level scale." The Service based this statement on numerous studies conducted in the western U.S., Alaska, and Canada, which indicate that packed snow associated with ski, snowmobile trails, and roads makes travel easier for potential lynx competitors, such as coyote, into the deep snow habitats of the lynx. Somewhat contrary, Kolbe et al. (2007) noted that while coyotes remained in lynx habitat throughout the winter, their use of compacted snowmobile trails was less than expected.

Northeastern Vermont is at the southern edge of this species range, and the importance of Vermont for Canada lynx has not been evaluated by the Service. The relatively greater amount of habitat and human disturbances within the landscape surrounding the division and adjacent McConnell Pond tract, including the increased availability of packed snow trails, is different than that in the remote areas of Canada. Interagency monitoring and research on competition for prey, and snowmobile-related disturbance impacts on lynx will be necessary to identify the need for conservation measures to ensure their persistence in Vermont. Such measures may result in trail closures to eliminate packed snow conditions that provide access to other predators into winter lynx habitat.

Ungulates (white-tailed deer; moose)

White-tailed deer expend more energy in winter than at other times of the year. To compensate, deer usually conserve energy by restricting their movements, particularly in late winter, when they lack fat reserves and snow is deeper, rather than increasing their food intake by foraging more widely (Moen 1976). Energy conservation measures include walking slowly, on level ground. Thus, they are particularly vulnerable to disturbances that counter that energy conservation strategy.

Oliff et al. (1999) found that most ungulates react more strongly (e.g., are more likely to flee, travel a greater distance) to a person on foot than a person on a snowmobile. Furthermore, stopping or getting off a vehicle creates more disturbance than a person on a continuously moving snowmobile. A few studies found that snowmobiles invoked a flight response or displaced deer from an area. Oliff et al (1999) observed flight response at distances no greater than 650 feet, while Freddy et al. (1986) observed reactions at distances less than 440 feet. Oliff et al. (1999) determined that their reaction was less intense when a visual barrier (i.e., vegetation and/or topography) was present. Eckstein et al. (1979) found deer were displaced from an area within 200 feet of snowmobile trails. Richens and Lavigne (1978) found deer were more likely to flee from snowmobiles traveling at high speeds than at speeds less than 10 miles per hour. They also propose that flight response to snowmobiles varied, depending on severity of winter, snow depth, type of cover, and time of day. Deer were more likely to flee from snowmobiles in early winter than in late winter possibly due to poor condition of deer toward the end of winter (Richens and Lavigne 1978). Deer are also more likely to be disturbed during early morning and evening when they are most active (Oliff et al. 1999).

A few studies showed that deer tend to use snowmobile trails as travel corridors between foraging areas and winter cover (within wintering areas) which may result in lower energy costs. Severinghaus and Tullar (1975) suggest that deer are not necessarily using trails to travel between productive forage areas, but instead concentrate foraging which contributes to over-browsing. They recommended keeping snowmobile trails at least 0.5 miles from deer wintering areas. Eckstein et al. (1979) also recommended that snowmobile trails avoid

deer wintering areas. They suggest that the effects of snowmobiles forcing deer off trails into deep snow would counterbalance any energy savings from compacted trail use. Huff and Savage (1972) observed white-tailed deer in Minnesota shifting the location used for winter cover depending on the level of snowmobile use. They found that deer utilized more desirable conifer (i.e., jack pine) areas with dense canopy cover during the middle of the week when snowmobile traffic was light, but shifted to a more open canopy aspen-birch stand during weekend heavy-use periods. They reported that radiant heat loss was higher in the aspen-birch stand than in the jack pine. On the other hand, a study conducted in Maine, suggests that snowmobile trails could be laid out in deer wintering areas in a way that could benefit deer, by improving their mobility, reducing energy costs, and providing access to better foraging areas (though snowmobile traffic was light in the study area) (Richens and Lavigne 1978).

Although moose are considerably better adapted to deep snow and winter conditions than deer, severe winters can still stress them if food supplies are exhausted or if they are in poor condition. Like deer, moose tend to reduce their activity levels in winter as an energy conservation measure, and disturbances that cause them to increase their activity come at an energetic cost. Collescott and Gillingham (1998) found that moose that bedded down within approximately 1,000 feet of an active snowmobile trail, or fed within 500 feet of snowmobile traffic, were likely to change their behavior in response to snowmobile disturbance. Moose within 1,000 feet of snowmobile traffic were sometimes temporarily displaced into less favorable foraging habitat. However, they did not find a significant impact on moose activity patterns within their study area associated with snowmobile traffic.

The studies above indicate that ungulates change their behavior in areas with active snowmobile trails. Ungulates are already operating at an energy deficit in the winter due to lack of high quality food (Picton 1999), and additional stress or disturbance can increase susceptibility to disease and predation, lead to higher mortality rates, and reduce productivity. Flight response is dependent on level of snowmobile use, speed, group size, and vegetative buffer between the trail and habitat being used. Within wintering areas, deer will use trails to travel between forage areas and thermal cover, although there is debate whether this saves deer energy or decreases their fitness level. Research conducted on predators, such as coyotes and bobcat, has shown that the packed snow associated with a groomed snowmobile trail network can allow easier travel (Buskirk et al. 1999), and potentially easier access to deer wintering areas. More than one study recommends snowmobile trails avoid deer wintering areas, though greater local investigations will be necessary to determine if trails are impacting wintering deer in the Nulhegan Basin. However, based on the long-term (i.e., 20 plus years) nature of the use and the absence of new forest openings, potential disturbance to wintering deer on the division from noise or visual stimulation from snowmobiles is likely not widespread. According to VFWD, the existing trail network generally avoids the core wintering habitat (C. Alexander, pers. comm.).

Black Bears

Black bears will abandon den sites if humans on foot disturb them sufficiently, and may abandon cubs (Goodrich and Berger 1994). Bears that abandon or change dens may remain active longer and experience more weight loss than undisturbed animals. Bears are particularly vulnerable to disturbance just before denning (generally November through December), and just after they emerge from dens in the spring (March through April) (Oliff et al. 1999), periods generally outside of the snowmobile season. Because of this, we do not expect greater than negligible impacts on black bears from snowmobiling on the division.

Other Carnivores (fisher, marten, weasels, red fox, coyote)

Little research has been done on disturbance effects on any of these species. However, fishers do not appear to alter their activity significantly in response to moderate levels of human disturbance (Oliff et al. 1999). Weasels and marten frequently tunnel under the snow when foraging. Snow compaction caused by snowmobile trails may affect their foraging ability locally, as well as negatively impact their small mammal prey.

Neumann and Merriam (1972) found that red foxes exhibited greater levels of activity near snowmobile trails and were using trails as travel corridors. Coyotes increase their use of snowmobile trails during severe winters as well (Crete and Lariviere 2003). In contrast to Buskirk et al. (1999), Kolbe et al. (2007) found that compacted snowmobile trails did not significantly influence the movements and foraging success of coyotes during the winter. We do not expect measurable impacts to these species given that snowmobiling occurs only on designated trails, most of which overlay a road network, and occupying only a fraction of the division's acreage.

Other Mammals (snowshoe hare, small mammals)

Neumann and Merriam (1972) found that hare activity was reduced within 250 feet of snowmobile trails. They also found that a single passage of a snowmobile could significantly alter the insulating properties and temperature gradient of snow to a depth of two feet. Those changes in temperature regime were potentially great enough to increase energy costs to small mammals burrowing under the snow.

Jarvinen and Schmid (1971) found a significant increase in mortality of small mammals in an area where snow had been compacted experimentally by snowmobiles. Small mammals did not appear to migrate off-site in response to snowmobile activity. They suggested that causes of mortality might have been related to the reduced insulating capacity and increased thermal conductivity of the compacted snow which may have increased thermal stress on animals. Snow compaction may also have limited movement of animals and reduced the permeability of the snow to a point that inhibited gas exchange and increased levels of carbon dioxide above normal. On the division, such compaction is limited to the trail network, which generally corresponds to the road network. In contrast, if extensive off-trail snowmobile activity was allowed, resulting in compaction of large areas of snow, the impacts on small mammal populations may be significant (Olliff et al. 1999).

Summary of Impacts to Wildlife

Anticipated impacts of snowmobile activity on refuge wildlife include displacement of wildlife immediately adjacent to trails and some potential for contamination of streams with sediment or exhaust. Snowmobiling is an ongoing use of the refuge and has been occurring at relatively consistent rates over the past 20 or more years. We would assess these trails and may reroute or close some of them if notable resource impacts seem likely. The use of well-constructed and maintained culverts and bridges over stream crossings helps to minimize the contamination of streams and impacts to aquatic life. Much of the disturbances to wildlife noted in literature are from snowmobiles that are not on designated trails and are traveling across open range habitats in unpredictable ways. Restricting snowmobile traffic to designated road corridors helps to increase predictability and wildlife habituation. The existing trails have been in place for decades and predate the establishment of the refuge. The snowmobile use at the division is currently at manageable levels based on monitoring studies, which supports our assessment that adverse impacts associated with this activity are expected to remain low.

Impacts to visitors: Winter use of the division is overwhelmingly by snowmobilers. Compared to the greater than 10,000 snowmobile visits, approximately 300 people (mostly school groups) access the visitor contact station, and the Nulhegan River and Black Branch Trails receive an estimated fewer than 250 wintertime visits. Due to the placement of the SSTS and this other visitor use infrastructure, the distances between them, and topography, none of these other visitors along the division's southern boundary is affected by the sights, sounds, or smells of snowmobiles. Public scoping meetings conducted during development of the CCP recorded feedback from a segment of users interested in greater access to the division during winter months. In addition, VFWD suggested consideration of opening the VAST trails to skiers/snowshoers, as is the case on neighboring public lands. Due to the lack of observed conflicts between user groups on neighboring lands and in an attempt to offer consistent public uses across ownerships, we propose opening snowmobile trails to pedestrian uses in the corresponding CCP. Given their limited accessibility to plowed roads and layout, pedestrian use is expected to be light, although this would place the two user groups in closer proximity, thereby potentially increased opportunities for conflict.

Snowmobile noise is often considered a significant impact. A National Park Service study conducted in Yellowstone reported that a visitor on one of two heavily traveled trails, one of which is a major route to Old Faithful, would hear a snowmobile more than 50 percent of the time (US GAO 2000). Vermont regulations prohibit the operation of snowmobiles with noise levels in excess of 73 decibels on the A scale at 50 feet in a normal operating environment. Noise levels of snowmobiles on the division have been recorded in three separate investigations (Benoit et al. 2008). Decibel levels were found to increase with increasing speeds, ranging from 66 decibels at 15 miles per hour to 77 decibels at 45 miles per hour when measured 50 feet from a trail. Because of its basin formation, snowmobile sounds are often readily apparent within the trail network, although the sound does not reach the pedestrian trails or visitor contact station, all located along the southern boundary (USFWS pers. obs.).

Summary of anticipated impacts: Although the information available about the effects of snowmobiling on designated trails is somewhat mixed, at its current and anticipated levels and patterns of use as proposed, we do not expect it to constitute significant short-term or long-term impacts separately or cumulatively. We would evaluate all trails annually to ensure there are not site-specific impacts. We would reroute or close any trails if we determine that they have a significant, negative impact on wildlife or habitat.

Snowmobile trails are primarily located on existing roads. The location of the trails has effectively mitigated impacts of snowmobiling relating to soil and vegetation on those surfaces. The bridges and culverts crossing the water courses are designed to support trucks and other heavy equipment. Therefore, additional impacts from snowmobiling are unlikely. Snowmobile trails throughout the area have been established for many years and pre-date refuge ownership. Because the potentially affected wildlife is accustomed to this use and with the implementation of strategic trail segment closures, we consider disturbance-related impacts on wildlife to be minimal. More stringent emission regulations by the U.S. Environmental Protection Agency, along with the increase in the number of four-stroke and new cleaner two-stroke engines in modern snowmobiles has and will continue to reduce the potential impacts on the environment described in the literature review. The continued presence of refuge and partner agency law enforcement will ensure adherence to the stipulations that support the compatibility of this use. Therefore, snowmobiling on the division does not pose a risk to the goals outlined in our CCP. Continued monitoring of the use will identify any actions needed to respond to new information and correct problems that may arise in the future.

Snowmobile trails on the division provide an important link in the state-wide trail system, enhance opportunities for the public to experience the winter landscape, and facilitate priority public uses. This use as proposed is viewed as an effective, justifiable, and compatible method of winter access to the 26,605-acre division and the proposed 5,485-acre addition.

PUBLIC REVIEW AND COMMENT:

A finding of appropriateness and this compatibility determination were distributed for public comment for 90 days from August 18, 2015 to November 16, 2015 as part of the review of the Silvio O. Conte Refuge's draft CCP/EIS. Comments we received on this use were considered as we developed this final determination. This determination will undergo another 30-day review with release of the final CCP/EIS. A summary of comments received on the draft plan is included in appendix O of the final CCP/EIS.

DETERMINATION (CHECK ONE BELOW):

____ Use is not compatible

__X__ Use is compatible, with the following stipulations

STIPULATIONS NECESSARY TO ENSURE COMPATIBILITY:

- In order to compensate for the proposed 1.4 miles of new trail construction, approximately 1.1 miles of non-essential, redundant trail will be closed:
  - Approximately 1.1 miles of secondary trail C102/114 between EX22 and EX32 (one-half of a small loop) on the McConnell Pond tract (if acquired by the Service).
  - Such closures will only be implemented if and when the proposed new trail is completed and open to the public.
- The administration of snowmobile access and use on the refuge will comply with *50 CFR 27*, Title 23 of the Vermont Statutes.
- The administration of snowmobile access and use on the refuge will comply with Executive Orders 11644 (*Use of Off-Road Vehicles on the Public Lands*, February 8, 1972) and 11989 (*Off-Road Vehicles on Public Lands*, May 24, 1977), as summarized below:

* Specific areas and trails shall be designated where snowmobile use is either permitted or prohibited—Public snowmobile travel is restricted to designated corridors within the SSTS that are depicted on statewide and Essex County VAST trail maps available to the public, in the division Visitor Services Plan, and clearly marked with trail signs on the refuge. Roads, trails or other areas that are closed to snowmobile travel, but could reasonably be mistaken for areas open for travel, are clearly marked with closure signs. Guidelines governing use are available in the refuge *Visitor Services Plan* and will be incorporated into future refuge brochures, and refuge staff are available to the public in the office and on the refuge to answer questions and provide information about the use. Vermont regulations are available to the public in the *Vermont Snowmobile Operators Manual*.

* Designated areas and trails shall be located to minimize damage to soil, watershed, vegetation, or other resources of the public lands —The corridors open for public snowmobile travel are located primarily (greater than 98 percent) on existing gravel roads; the remainder are located on existing winter roads. Damage to soils and vegetation is minimized due to snow cover while use is occurring; damage to waters are minimized by trail location and stream crossings on bridges; damage to other resources (including cultural) is minimized due to trail location, snow cover, and management of the use.

* Areas and trails shall be located to minimize harassment of wildlife or significant disruption of wildlife habitats—Such harassment is minimized because: (a) migratory birds (a Federal trust resource) are largely absent from the division during the winter; (b) many resident species are dormant or sequestered under ice or snow; (c) trails (encompassing a total of approximately 67 acres) do not traverse any significant concentrations of wildlife; (d) no functional winter deer shelter currently exists adjacent to approximately 6.8 miles of trails that occur within, or 2.7 miles of trails that occur on the border, of the Nulhegan Deer Wintering Area, and e) wildlife are presumed to have acclimated to motor vehicle travel on gravel roads underlying the SSTS for the past 50 years and to the spatial, temporal, behavioral predictability of snowmobile use as managed on the SSTS.

* Trails shall not adversely affect the natural, aesthetic, or scenic values of the lands —Such values are not significantly affected because: (a) snowmobile trails encompass only 67 acres of an approximately 32,000-acre division in linear openings already in existence as road corridors, (b) due to topography, forest cover, and relatively narrow width, trails are not visible, or are indistinguishable, within most viewsheds of the division; (c) these lands have a 200-year history of human uses and the appearance of these trails is not inconsistent with the rugged character of the land and its cultural heritage, (d) surface impacts are not occurring that would affect scenic values in the non-snow season, e) summer/fall trail maintenance activities do not significantly or permanently damage vegetation, and on the greater than 98 percent of the trail system that occurs on vehicular roads, is necessary for public safety and proper maintenance, f) trail signs are temporary and generally non-obtrusive, and any litter resulting from the use is removed by the snowmobile clubs.

* Operating conditions shall be directed at protecting resource values, preserving public health, safety, and welfare, and minimizing use conflicts —(a) resource values are protected because dates are established within which snowmobile use can occur, site conditions must be suitable for operation of snowmobiles and groomers without causing damage and if conditions become unsuitable, trails are closed and use is discontinued and (b) public safety, health, and welfare are preserved and use conflicts are minimized due to: enforcement of applicable provisions of 50 CFR 27.31, Vermont Title 23, and Refuge requirements including designated trail system, imposition of speed limits, placement of safety and informational signs, noise level limits, vehicles must be in safe operating condition, reasonable and prudent operation is required, trail closures will occur based on unsafe conditions–in fact, with more than 10,000 visits per year, the first snowmobile-related injury was reported in 2012.

* Areas and trails where snowmobile use is permitted are well-marked and information about location and conditions for use are made available to the public —Public snowmobile travel is restricted to designated corridors within the SSTS that are depicted on statewide and Essex County VAST trail maps available to the public, in the division's visitor services plan, and clearly marked with trail signs on the division. Entrances to the division occurring on the SSTS are clearly marked with refuge boundary signs. Regulations governing use are available in the visitor services plan and will

be incorporated into future refuge brochures and other informational displays, and refuge staff are available to the public in the office and on the trails to answer questions and provide information about the use, Vermont regulations are available to the public in the Snowmobile Operators Manual. SUPs issued to VAST and local snowmobile clubs contain specific special conditions that govern their operation and use of the SSTS on the Refuge. Any SUP issued for access to private camps that are located on the division that are not situated on the SSTS define a specified route of travel minimizing off-trail travel and are for direct ingress/egress only.

- Provisions are made for law enforcement — A federal wildlife officer enforces applicable laws and regulations, provides visitor and resource protection, performs public outreach, monitors activity patterns, collects information on the use, and provides appropriate feedback to refuge management staff concerning snowmobile and other public uses. Additional assistance is provided by State and County enforcement officers.

- Effects of snowmobile use must be monitored — Snowmobile use and its effects are monitored through direct observations by refuge staff of trail use and user activity patterns and conduct, law enforcement patrols including speed monitoring and enforcement using radar detection devices, direct counts of snowmobiles, use of infrared traffic counters, observations of wildlife occurrence, behavior, and habitat use in the vicinity of the SSTS, monitoring of trail conditions and site impacts, detection of off-trail travel, and through awareness and evaluation of potential conflicts with other uses, refuge purposes, or management goals. A study of visitor use, including snowmobiling, by Southern Vermont College produced a visitor use summary, Northwoods Stewardship Center prepared an investigation of wildlife impacts, and VAST completed a study of the contribution of pollutants from snowmobiles.

- If it is determined that snowmobile use is causing considerable adverse effects on soil, vegetation, wildlife, wildlife habitat or cultural or historic resources of particular areas or trails, those areas must be closed until adverse effects are eliminated or preventative measures have been implemented to prevent recurrence — Special consideration must be given to managing this use to ensure that impacts of the use, user numbers, and user activity patterns remain within acceptable thresholds for resource protection and visitor safety (i.e., the use does not materially interfere with or detract from refuge purposes or the accomplishment of the Refuge System mission), as evidenced by evaluation of resource status through monitoring and results of studies. Should circumstances indicate that these thresholds are or will be exceeded, appropriate action, including, but not limited to, implementing snowmobile exhaust emission or engine noise limitations, requiring specialized equipment (e.g., four-stroke engines), modifying snowmobile use patterns, limiting snowmobile users and visits, and/or trail relocation or closure must be considered to ensure compatibility. Compatibility could be reconsidered when conditions under which this use is permitted change significantly, or if there is significant new information regarding the effects of the use.

- Providing for a safe use through proper administration and regulation, public education, and law enforcement will be essential. Refuge staff will continue to work with VAST and the local snowmobile clubs to develop the best system of signage for safety and regulatory information, minimizing the effects of trail maintenance activities, and reducing conflicts with other uses. Potential conflicts of snowmobile use with public safety, trust resources, wintering deer habitat, and other refuge resources, and management or public use programs will be appropriately mitigated in consultation with VAST, VANR, and the public.

Special Conditions for Special Use Permit Issued to VAST and Local Snowmobile Clubs

Special conditions for the SUP (below) are designed to help ensure the compatibility of this use, reduce negative impacts to Refuge resources, provide for visitor safety, and minimize conflicts with refuge management and other uses of the Refuge.

(1) The Vermont Association of Snowmobile Travelers (VAST) and associated local clubs (Brighton Snowmobile Club, Northeast Kingdom Snow Blasters, and Canaan Border Riders), and their officers, agents, and assigns (hereinafter collectively referred to as "Permitee"), are authorized to use, provide for use, and maintain only those trails on the Nulhegan Basin Division of the Silvio O. Conte National Fish and Wildlife Refuge (Conte Refuge) designated as part of the Statewide Snowmobile Trail System (SSTS) and depicted on the attached map. Snowmobile use is limited to the period from December 15 to April 15 and contingent on suitable snow conditions. Use of snowmobiles outside of the identified trails and time period is strictly prohibited. The Permitee shall notify all of its members of this condition. Permitee shall actively promote and encourage among users of the SSTS, compliance with all applicable laws, regulations, and policies governing snowmobiles and their use.

(2) In consideration of being permitted to engage in the activity authorized under this Special Use Permit at the Nulhegan Basin Division of the Conte Refuge, Permitee, for themselves and their personal representatives, heirs, and next of kin, hereby releases, waives, and forever discharges the United States of America, its agents and employees, all for the purposes herein referred to as, Releasees, from any and every claim, demand, action or right of action, of whatsoever kind or nature, either in law or in equity, arising from or by reason of any bodily injury or personal injuries known or unknown, death and/or property damage resulting or to result from any injury, which may occur while engaged in the permitted activity, and covenants not to sue the Releasees, for any loss or damages, and any claim or damage therefore, on account of injury to the person or property or resulting in death of the Permitee, whether caused by the negligence of Releasees or otherwise. Permitee agrees to indemnify, defend, save and hold harmless the Releasees and each of them from any loss, liability, damage or cost Releasees may incur due to the presence of Permitee in or upon the said property of the United States. Releasor agrees that this release and waiver is intended to be as broad and inclusive as permitted by the laws of the State of Vermont and that if any portion thereof is held invalid, it is agreed that the balance shall notwithstanding, continue in full legal force and effect. Permitee and its employees, designees, or associates shall indemnify against, and hold the United States of America, its agents and employees harmless from any and all claims, actions, suits, proceedings, costs, expenses, damages, and liabilities arising out of, connected with, or resulting from, the use by the Permitee and its employees, designees, or associates, or the privileges described, provided by this Special Use Permit.

(3) Permitee shall maintain said trails in safe, good, and useable condition and shall be responsible for placing and maintaining necessary signs, including speed limit and other safety-related signs as necessary to ensure adequate communication of safety information, trail conditions and features, speed limits, and trail restrictions to trail users.

(4) Maximum speed for snowmobiles will be 35 miles per hour. Speed limit signs on the refuge will be placed at all SSTS entrance points, at all trail junctions, and along all trails at approximately 0.5-mile intervals, visible from both directions of travel. Speed limit signs will be posted on their own stake/post; not share a post with any other signs. Two speed limit signs may be attached back-to-back on a single post, then posted on alternating right/left sides of the trail to meet the 0.5-mile and visible from both directions requirement as stated above. Additional signs such as "Road closed to snowmobiles," "Stay on Trail," etc., will be posted according to the map provided by the refuge, or upon verbal request by the refuge manager, or his designee.

(5) Signs may not be placed before **November 1** and must be removed before the **Memorial Day** weekend.

(6) Trails will be "opened" only after consultation with the Refuge Manager or his designee, following the placement of the required signage, and taking into account the snow conditions across the refuge, trail conditions on adjoining lands, and other refuge needs. The Permitee will not advertise refuge trails as "open" on their website or phone message line unless and until they are opened following joint consultation with the refuge manager.

(7) Failure to remove regulatory and directional signs by the Friday preceding Memorial Day will result in the Permitee being charged for the refuge's cost in so doing.

(8) Permitee agrees to patrol all of the refuge trails throughout the season of snowmobile use and at least once after snowmelt, and to pick up all trash and debris from trails and road shoulders and properly dispose of it off-refuge at an approved facility. The final collection and disposal of such litter shall occur prior to the Memorial Day Weekend.

(9) This Special Use Permit does not authorize the construction of new trails. Approved trails may be maintained by the Permitee, which includes signing trails, grooming snow-covered trails, replacing/repairing road culverts, replacing bridges, and the cutting and removal of trees, brush, and other obstacles from trails to a width of 15 feet. All trail maintenance activities must be coordinated with, and approved by, the Refuge Manager. All trees and brush leaning into the trail may be cut. Modification to the location of existing trails is not permitted without prior written approval of the Refuge Manager. Brush cutting, tree removal, and mowing activities will be performed only after August 1 unless otherwise approved by the Refuge Manager. Permitee may cut and remove standing trees for bridge construction where needed, but only with prior approval by Refuge Manager. Permitee agrees to pay standard prevailing rate for value of any merchantable timber removed.

(10) Permitee agrees to use pick-up trucks for trail maintenance whenever possible. The use of all terrain vehicles (ATV) for trail maintenance will be allowed only under the conditions of the S and only when and where the use of trucks is not feasible. Permitee will use every feasible precaution against causing surface damage to refuge roads, lands, and waters. Permitee will report any damages as soon as possible and will affect any needed repairs at the discretion of the refuge manager. Permitee shall assist the U.S. Fish and Wildlife Service to control illegal use of ATVs by informing ATV users they encounter that ATV use on the refuge is not allowed. Permitee shall not litter, or start or use open fires while engaged in the activities connected with this permit.

(11) Use of said property by Permitee shall be limited to noncommercial and nonprofessional recreational purposes and is further limited to such uses as are not in conflict with any applicable local ordinances or State laws including zoning ordinances and regulations. It shall be the sole responsibility of Permitee to obtain all necessary permits from any governmental authority or any instrumentality, agency or commission thereof to maintain or repair any trails and associated structures on the permitted property. Copies of any applications for such permits and approved permits shall be sent to the U.S. Fish and Wildlife Service. The U.S. Fish and Wildlife Service reserves the right to terminate this Special Use Permit in the event Permitee fails to obtain requisite permits or in the event Permitee maintains, modifies, or repairs trails that do not conform to the conditions contained on such permits. In addition, Permitee will at all times during the term of this permit or any extension thereof, observe and conform to all laws, ordinances, rules, and regulations now or hereafter made by any governmental authority for the time being applicable to said property and trails thereon or use thereof.

(12) The Refuge Manager reserves the right to close any or all trails or sections of trails when use of said trails by snowmobiles is determined to be not compatible or otherwise inconsistent or in conflict with the needs of the refuge or the National Wildlife Refuge System including, but not limited to, wildlife, habitat, and public use management by the U.S. Fish and Wildlife Service, its successors, assigns, administrators, licensees, and contractors; or because of inadequate snow, environmental damage, vandalism, or public safety considerations. The U.S. Fish and Wildlife Service will notify and discuss any problems with Permitee, and will consider establishment of alternative trails prior to closure of any trails.

(13) VAST shall provide annually, prior to opening day for the trail system, the Refuge Manager with a Certificate of Insurance evidencing that it has obtained and will maintain during the term of the Special Use Permit, Comprehensive General Liability insurance against claims occasioned by the actions or omissions of the Permitee, its members, agents and employees in carrying out the activities and operations authorized hereunder. Such insurance shall be in an amount commensurate with the degree of risk and the scope and size of such activities authorized hereunder, but in any event, the limits of liability shall not be less than $2,000,000.00 per occurrence. All liability policies shall name the United States of America as a named insured and shall provide that the insurance company shall have no recourse against the Government for payment of any deductible, premium, or assessment.

(14) Permitee will have in their possession a copy of this Special Use Permit and List of Special Conditions while engaged in the activities described therein and will present it to Refuge officials or law enforcement agents of United States or Vermont upon their request.

(15) Permitee will inform membership and users of the SSTS whenever/however feasible or practical to partake of interpretive information at the refuge kiosks while on refuge land.

(16) Permitee will designate one person from their club to be the point of contact (POC) for the Refuge Manager for all correspondence. Said person will provide their contact information to the refuge. The POC will maintain frequent communication as needed, but specifically, at the beginning and end of the snowmobile season in order to coordinate an unproblematic opening and closing of the trails.

(17) The U.S. Fish and Wildlife Service reserves the right to replace or rescind this permit at any time.

JUSTIFICATION:

This use has been determined to be compatible provided the provisions of *50 CFR 27.31,* Title 23 of the Vermont statutes, Executive Orders 11644 and 11989, the recommendations of the GAO report, and Special Use Permit Conditions are implemented. This use is not expected to materially interfere with or detract from the mission of the Refuge System nor the purposes for which the Refuge was established. It does not materially interfere with or detract from the refuge purposes as follows:

- *To conserve, protect, and enhance the Connecticut River populations of Atlantic salmon, American shad, river herring, shortnose sturgeon, bald eagles, peregrine falcons, osprey, black ducks, and other native species of plants, fish and wildlife. To conserve, protect, and enhance the natural diversity and abundance of plant, fish and wildlife species and the ecosystem upon which these species depend within the refuge.*

  Snowmobiling at the Nulhegan Basin Division will not detract from these two purposes because most animals, especially most of the Service's migratory bird trust resource, are absent from the division in the winter and many resident wildlife species hibernate or remain under the deep snow cover; plants and ecosystems are protected from impacts by snow cover and the location of trails overtop roads; no significant negative impacts directly attributable to snowmobiling have been observed or documented on the division.

- *To protect species listed as endangered or threatened, or identified as candidates for listing, pursuant to the Endangered Species Act of 1973 as amended (16 U.S. 1531 et seq.).*

  Canada lynx are the only federally listed species known to occur on the division. Based on the fact that lynx began occupying the division in the presence of snowmobiling, it is not likely that this use will cause undue disturbance to lynx. Although collisions with lynx are possible, it is not believed this is likely with enforcement of a 35 mile per hour speed limit and the fact that a negligible number of snowmobile-wildlife collisions have been reported or observed since Service acquisition of the division.

- *To restore and maintain the chemical, physical and biological integrity of wetland and other waters within the refuge.*

  Snowmobile crossings of water bodies are on bridges designed for passenger vehicle traffic; no significant negative impacts to waterways directly attributable to snowmobiling have been observed or documented in studies performed on the refuge.

- *To fulfill the international treaty obligations of the United States relating to fish and wildlife and wetlands.*

  Service trust species of migratory birds are largely absent from the refuge in the winter; of those that occur, no significant negative impacts directly attributable to snowmobiling have been observed or documented on the refuge.

- *To provide opportunities for…fish and wildlife oriented recreation and access to the extent compatible with the other purposes stated in this section.*

  Snowmobile access provides an enhanced opportunity for the public to access the refuge to enjoy and experience the winter landscape and scenery and engage in wildlife-oriented recreation, including priority public uses, in support of this purpose.

This use will not pose significant short-term or long-term or cumulative adverse effects on trust species or other refuge resources, will not substantially interfere with public use of the refuge, nor cause an undue administrative burden. Our determination is based on existing, available information, including our own observations. Should we learn that there are adverse impacts we did not anticipate, either from monitoring the use or from other reliable sources, we will modify the use and the stipulations to avoid or minimize potential adverse impacts as swiftly as possible.

SIGNATURE:

Refuge Manager: _____ _____
(Signature) (Date)

CONCURRENCE:

Regional Chief: _____ _____
(Signature) (Date)

MANDATORY 10-YEAR RE-EVALUATION DATE: _____

LITERATURE CITED:

Adams, E.S. 1975. Effects of lead and hydrocarbons from snowmobile exhaust on brook trout (*Salvelinus frontinalis*). Transactions of the American Fisheries Society 2:363-373.

Benoit, J., T. Sullivan, M. Dyer, and H. Root. 2008. Wildlife habitat use in relation to snowmobile activity in the Nulhegan Basin Division of the Silvio O. Conte National Fish and Wildlife Refuge. Final Report. 21 pp.

Buskirk, S.W., L.F. Ruggiero, and C.J. Krebs. 1999. Habitat fragmentation and interspecific competition: implications for lynx conservation. USDA Forest Ser. Gen. Tech. Rep. RMRS-GTR-30.

Crete, M. and S. Lariviere. 2003. Estimating the costs of locomotion in snow for coyotes. Canadian Journal of Zoology 81:1808-1814.

Eckstein, R.G., T.F. O'Brien, O.J. Rongstad, and J.G. Bollinger. 1979. Snowmobile effects on movements of white-tailed deer: a case-study. Environmental Conservation 6(1):45-51.

Freddy, D.J., W.M. Bronaugh, and M.C. Fowler. 1986. Responses of mule deer to disturbance by persons afoot and snowmobiles. Wildlife Society Bulletin 14:63-68.

Goodrich, J.M. and J. Berger. 1994. Winter recreation and hibernating black bears *Ursus americanus.* Biological Conservation 67:105-110.

Hammitt, W.E. and D.N. Cole. 1998. Wildland recreation: ecology and management. 2nd Ed. John Wiley & Sons, New York. 361 p.

Huff, D.E. and P.J. Savage. 1972. A correlation of deer movements with snowmobile activity in Minnesota during winter. Proceedings of the Midwest Fish & Wildlife Conference 34:42.

Jarvinen, J.A. and W.D. Schmid. 1971. Snowmobile use and winter mortality of small mammals. *In*: Proceedings of the 1971 snowmobile and off the road vehicle research symposium. Tech. Rep. 8. Recreation Research and Planning Unit, Department of Park & Recreation Resources, Michigan State University, East Lansing, Michigan. 196 p.

Knight, R.L. and S.K. Skagen. 1988. Effects of recreational disturbance on birds of prey: a review. *In: Glinski, R.L., B.G. Pendelton, M.B. Moss, M.N. LeFranc, Jr., B.A. Millsap, S.W. Hoffman, C.E. Ruibal, D.L. Krahe, D.L. Owens eds., Proceedings of the southwest raptor management symposium and workshop.*

Knight, R.L. and D.N. Cole. 1995. Factors that influence wildlife responses to recreationists, *In*: R.L. Knight and K.J. Gutzwiller, eds., Wildlife and recreationists: coexistence through management and research. Island Press, Washington, DC. 372 p.

Kolbe, J.A., J.R. Squires, D.H. Pletscher, and L.F. Ruggiero, 2007. The Effect of snowmobile

trails on coyote movements within lynx home ranges. Journal of Wildlife Management, 71:1409-1418.

Moen, A.N. 1976. Energy conservation by white-tailed deer in the winter. Ecology 57:192-198.

Neumann, P.W. and H.G. Merriam. 1972. Ecological effects of snowmobiles. Canadian Field-Naturalist 86:207-212.

Ollif, T., K. Legg, and B. Kaeding, eds. 1999. Effects of winter recreation on wildlife of the Greater Yellowstone Area: a literature review and assessment. Rept. to the Greater Yellowstone Coordinating Committee. Yellowstone National Park, Wyoming. 315 p.

Picton, H.D. 1999. Energetic cost of wildlife displacement by winter recreationists. In: Olliff T, Legg K, Kaeding K (eds) Effects of winter recreation on wildlife of the Greater Yellowstone Area: a literature review and assessment Report to the Greater Yellowstone

Coordinating Committee. Yellowstone National Park, Wyoming, pp 135–144.

Richens, V.B. and G.R. Lavigne. 1978. Response of white-tailed deer to snowmobiles and snowmobile trails in Maine. Canadian Field-Naturalist 92(4):334-344.

Severinghaus, C.W. and B.F. Tullar. 1978. Wintering deer versus snowmobiles. New York Department of Environmental Conservation.U.S. Fish and Wildlife Service (USFWS). 1999. Final Environmental Assessment: U.S. Fish and Wildlife Service Participation in a Partnership to Protect "the Champion Lands" in Essex County, Vermont–Options for Protecting the Nulhegan Basin Special Focus Area. 78pp.

U.S. Fish and Wildlife Service. March 24, 2000. Federal Register (Volume 65, Number 58) 50 CFR Part 17. Endangered and Threatened Wildlife and Plants; Determination of Threatened Status for the Contiguous U.S. Distinct Population Segment of the Canada Lynx and Related Rule; Final Rule Page 16051-16086.

U.S. GAO. 2000. Report to congressional requesters: federal lands: agencies need to assess the impact of personal watercraft and snowmobile use. GAO/RCED-00-243. U.S. General Accounting Office, Washington, DC. 85 p.

VHB Pioneer. 2010. Snowmobile Trail Chemistry Study. Vermont Association of Snow Travelers. Ferrisburgh, VT. 184 p.

Map D.5. Proposed Snowmobiling Trails at the Nulhegan Basin Division.

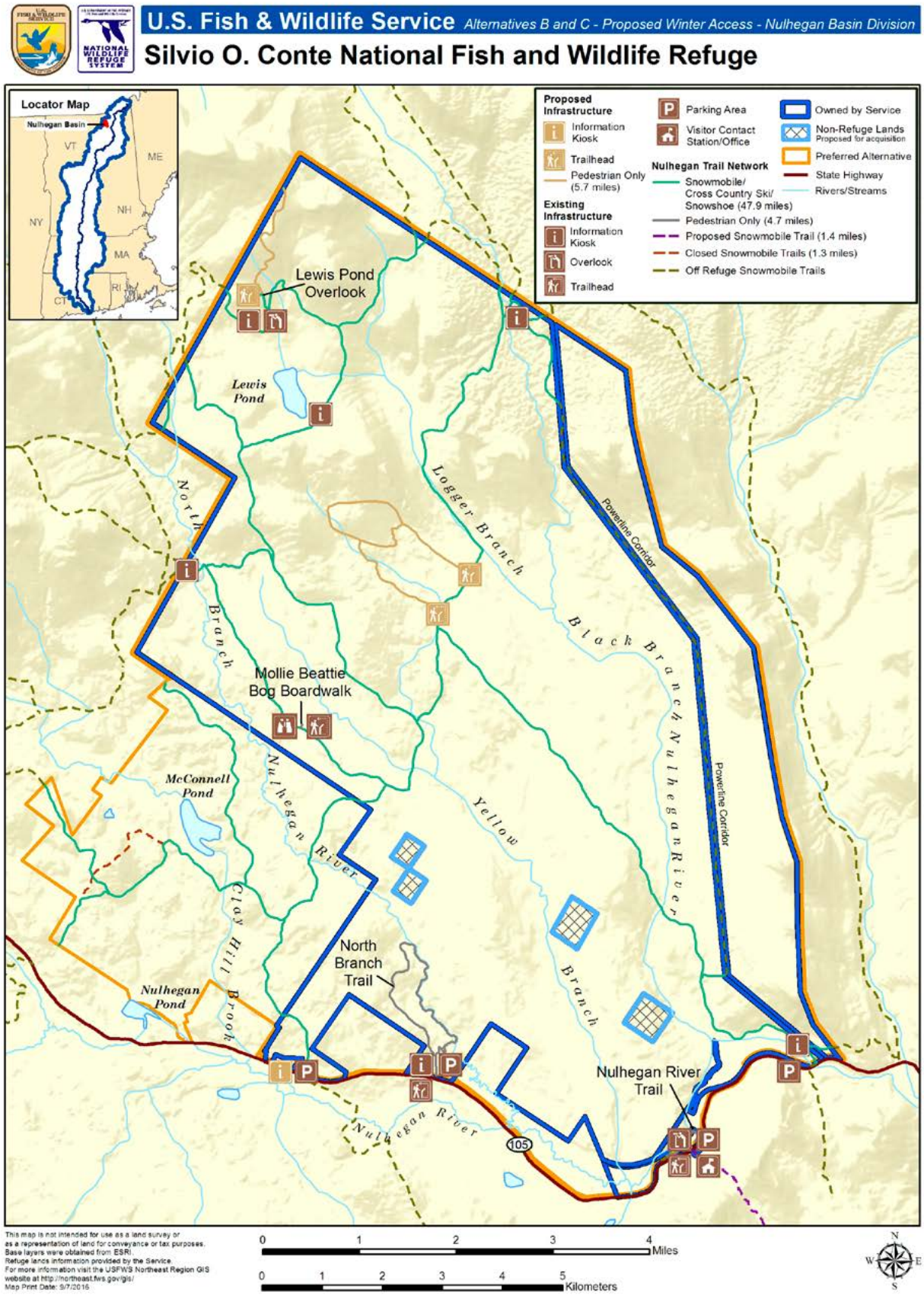

FWS Form 3-2319
02/06

FINDING OF APPROPRIATENESS OF A REFUGE USE

Refuge Name: Silvio O. Conte National Fish and Wildlife Refuge

Use: Snowmobiling on Designated Snowmobile Trails on the Pondicherry Division

This form is not required for wildlife-dependent recreational uses, take regulated by the State, or uses already described in a refuge CCP or step-down management plan approved after October 9, 1997.

Decision Criteria:	**YES**	**NO**
(a) Do we have jurisdiction over the use?	✔	
(b) Does the use comply with applicable laws and regulations (Federal, State, Tribal, and local)?	✔	
(c) Is the use consistent with applicable Executive orders and Department and Service policies?	✔	
(d) Is the use consistent with public safety?	✔	
(e) Is the use consistent with goals and objectives in an approved management plan or other document?	✔	
(f) Has an earlier documented analysis not denied the use or is this the first time the use has been proposed?	✔	
(g) Is the use manageable within available budget and staff?	✔	
(h) Will this be manageable in the future within existing resources?	✔	
(i) Does the use contribute to the public's understanding and appreciation of the refuge's natural or cultural resources, or is the use beneficial to the refuge's natural or cultural resources?	✔	
(j) Can the use be accommodated without impairing existing wildlife-dependent recreational uses or reducing the potential to provide quality (see section 1.6D, 603 FW 1, for description), compatible, wildlife-dependent recreation into the future?	✔	

Where we do not have jurisdiction over the use ["no" to (a)], there is no need to evaluate it further as we cannot control the use. Uses that are illegal, inconsistent with existing policy, or unsafe ["no" to (b), (c), or (d)] may not be found appropriate. If the answer is "no" to any of the other questions above, we will generally not allow the use.

If indicated, the refuge manager has consulted with State fish and wildlife agencies. Yes___✔___No _____.

When the refuge manager finds the use appropriate based on sound professional judgment, the refuge manager must justify the use in writing on an attached sheet and obtain the refuge supervisor's concurrence.

Based on an overall assessment of these factors, my summary conclusion is that the proposed use is:

Not Appropriate _____ **Appropriate** ___✔___

Refuge Manager: _____ Date:_____

If found to be **Not Appropriate**, the refuge supervisor does not need to sign concurrence if the use is a new use.

If an existing use is found **Not Appropriate** outside the CCP process, the refuge supervisor must sign concurrence.

If found to be **Appropriate**, the refuge supervisor must sign concurrence:

Refuge Supervisor: _____ Date: _____

A compatibility determination is required before the use may be allowed.

JUSTIFICATION FOR A FINDING OF APPROPRIATENESS OF A REFUGE USE

Refuge Name: Silvio O. Conte National Fish and Wildlife Refuge

Use: Snowmobiling on Designated Snowmobile Trails on the Pondicherry Division

NARRATIVE:

The State of New Hampshire has over 6,000 miles of snowmobile trails, which are part of a more expansive regional trail network that includes parts of Vermont, Maine, and adjacent Canadian Provinces. The 3.7 miles of snowmobile trails on the Pondicherry Division are part of the State's "Snowmobile Trail Number 5." Also, a 3-mile section of the State Snowmobile Trail 102 crosses the refuge, but is owned and managed by the State. Snowmobile recreation is a popular winter activity in northern New Hampshire and it provides access to the refuge and can provide an opportunity for visitors to engage in wildlife-dependent recreation, particularly wildlife observation and photography. Specifically, snowmobilers often stop to view and photograph Cherry Pond and Moorhen Marsh that has a spectacular background of the Presidential Range.

The use is consistent with the refuge's goals and objectives to conserve the refuge's natural resources, because, due to the season of use, potential impacts to these resources are minimized because the ground is frozen and covered with snow and fewer species and fewer numbers of wildlife are present. Key winter habitat for most resident wildlife such as big game and gallinaceous birds (e.g., species of grouse) would be minimally affected by snowmobile presence on the Powerline Trail. Winter thermal cover for many species at the Pondicherry Division is composed of mature evergreen conifers, especially spruce and hemlock. Because this trail is completely within the managed power line corridor on the division, little impact to resident winter wildlife is anticipated.

This use may also contribute to public understanding of, and appreciation for, the refuge's natural resources by providing opportunities for participants to experience the refuge, see refuge habitats, and support wildlife-dependent recreation during winter when access to the majority of the refuge is otherwise limited.

We do not anticipate that the use will conflict with other refuge users. Although snowmobiles can have loud engines, the State of New Hampshire requires that snowmobiles comply with Snowmobile Safety and Certification Committee Standards, which include a maximum decibel-level for engines. Also, the level of pedestrian use on the refuge is relatively limited during the winter. However, the number of hikers, cross-country skiers, and snowshoers has recently been increasing on the refuge. The Mud Pond Trail parking lot, approximately one and a half miles from the snowmobile trail is the only parking area that remains open on the Division during winter and accounts for much of the increase in visitation. From here visitors can access the Americans with Disabilities Act (ADA)-compliant trail or explore the old logging road network on skiis or snowshoes. The section of snowmobile trail on the division is only a developed trail during winter; outside this season few people, other than hunters, use this utility corridor. Most skiers and snowshoers continue to use the 3-mile State-owned Presidential Recreation Trail to access the popular Cherry Pond area, because there is parking at the State trailhead and this rail-trail is the only groomed, direct access to this area. Noise from snowmobiles can be an annoyance to other visitors, but there are options to avoid the snowmobile trails and the two user groups have coexisted in this area long before the division was established.

For these reasons, we have determined that continuing to allow this use is consistent with the U.S. Fish and Wildlife Service's policy on the appropriateness of refuge uses (603 FW 1). This finding of appropriateness and the compatibility determination for this use was distributed for public comment for 90 days from August 18, 2015 to November 16, 2015 as part of the review of the Silvio O. Conte Refuge's draft CCP/EIS. Comments we received on this use were considered as we developed this final determination. A summary of comments received on the draft plan is included in appendix O of the final CCP/EIS. This finding will undergo another 30-day review with release of the final CCP/EIS.

COMPATIBILITY DETERMINATION

USE:

Snowmobiling on Designated Snowmobile Trails on the Pondicherry Division

REFUGE NAME:

Silvio O. Conte National Fish and Wildlife Refuge (Conte Refuge)

DATE ESTABLISHED:

October 3, 1997

ESTABLISHING AUTHORITY

- Silvio O. Conte National Fish and Wildlife Refuge Act (Public Law 102-212).
- Migratory Bird Conservation Act of 1929.
- Land and Water Conservation Fund Act of 1965.

PURPOSE(S) FOR WHICH ESTABLISHED:

- To conserve, protect, and enhance the Connecticut River populations of Atlantic salmon, American shad, river herring, shortnose sturgeon, bald eagles, peregrine falcons, osprey, black ducks, and other native species of plants, fish, and wildlife.
- To conserve, protect, and enhance the natural diversity and abundance of plant, fish and wildlife species and the ecosystem upon which these species depend within the refuge.
- To protect species, listed as endangered or threatened, or identified as candidates for listing, pursuant to the Endangered Species Act of 1973 (ESA) as amended (16 U.S. 1531 et seq.).
- To restore and maintain the chemical, physical, and biological integrity of wetland and other waters within the refuge.
- To fulfill the international treaty obligations of the United States relating to fish and wildlife and wetlands.
- To provide opportunities for scientific research, environmental education, and fish and wildlife oriented recreation and access to the extent compatible with the other purposes stated in this section.

THE NATIONAL WILDLIFE REFUGE SYSTEM MISSION:

To administer a national network of lands and waters for the conservation, management, and where appropriate, restoration of the fish, wildlife, and plant resources and their habitats within the United States for the benefit of present and future generations of Americans.

DESCRIPTION OF USE:

(a) What is the use? Is the use a priority public use?
Public snowmobile access on established (as of 2013) State of New Hampshire snowmobile trails. This is not a priority public use of the National Wildlife Refuge System (Refuge System), under the National Wildlife Refuge System Administration Act of 1966 (16 U.S.C. 668dd-668ee), as amended by the National Wildlife Refuge System Improvement Act of 1997. This compatibility determination pertains only to non-commercial,

public snowmobile access on the Pondicherry Division; commercial snowmobile tours are a different use that would need to be considered separately.

(b) Where would the use be conducted?
New Hampshire has more than 6,000 miles of snowmobile trails which are part of a regional trail network that includes Vermont, Maine, and the adjacent Canadian provinces. Approximately 1,000 miles of trail are located in Coos County. The Pondicherry Division includes approximately 4.9 miles of New Hampshire Snowmobile Trail Number 5 on what is known as the Powerline Trail, located within a Public Service of New Hampshire (PSNH) power line corridor that enters the Division from the west and northwest in Whitefield, proceeds southeast to the Presidential Range Rail-Trail, then due east until it leaves the division near Jefferson Meadows (map D.6). The U.S. Fish and Wildlife Service (Service) owns this land in fee and PSNH has an easement on the utility corridor. At this time, only about 2.8 miles of the trail on the division is being actively used (see explanation below).

A 3-mile section of rail trail known as the Presidential Recreational Trail (State Snowmobile Trail 102)—owned by the State of New Hampshire and managed by the New Hampshire Bureau of Trails (Bureau of Trails)—lies within the Pondicherry Division boundary (map D.6). This is a non-motorized trail, except during the winter with snow cover when snowmobiles and all-terrain vehicles are permitted. Across the refuge, the railroad grade runs from the State parking lot on Airport Road north to Waumbek Junction, then east to Jefferson Meadows.

Historically, the snowmobile trail that crossed what is now the Pondicherry Division was located entirely within the utility corridor. The eastern half of this trail on thedDivision was relocated to the railbed east of Waumbek Junction after that railroad line was abandoned. Although the section east of the Presidential Recreational Trail is no longer active, the Bureau of Trails has requested that it remain an alternative to the currently used rail-trail route in the event of storm damage, flooding, forest management activities during the winter, or if that portion of the rail line is reactivated (Clinton Savage, Bureau of Trails, personal communication).

Assuming a 12-foot wide trail, approximately four acres or 0.06 percent of the division landbase is directly impacted by the active snowmobile trail. The snowmobile trail itself lies completely within the utility corridor which is maintained in an early forest succession/meadow habitat mix. Wildlife associated with these habitats during the snowmobile season includes a limited number of bird species because the migratory birds have moved to their wintering areas. Some species such as black-capped chickadees and downy woodpeckers that over winter on the Division, may spend some of their time in the power line corridor, but most winter residents are forest species. Black bears, reptiles, amphibians, bats, beavers, and fish may be found in the corridor, but typically these species are inactive or under ice during the snowmobile season. Species typically active during winter and potentially found in the power line corridor habitat include snowshoe hares, coyotes, and small rodents. No federally listed species are known to occur at the Pondicherry Division. Canada lynx tracks have been verified in the area and dwarf wedgemussels are in the Connecticut River which is approximately 8 river miles downstream from the division.

(c) When would the use be conducted?
Snowmobile use on the refuge would begin no earlier than December 1 and end no later than April 30. This minimizes conflicts with migratory and hibernating wildlife, and soil disturbance since snow cover is a prerequisite to opening the trail. Snowmobile access and trail grooming will be allowed during daytime and nighttime hours. Use outside of daytime hours (one-half hour before sunrise and one-half hour before sunset requires a special use permit (SUP). General trail maintenance activities such as brush cutting and down tree removal also may be performed occasionally during the late summer and fall.

(d) How would the use be conducted?
Snowmobilers at the Pondicherry Division must comply with New Hampshire Revised Statutes Annotated (RSA) 215:A, *Off-Highway Recreational Vehicles and Trails* which includes provisions for annual registration, manufacturing specifications, and rules for lawful operation on public and private lands. Individual snowmobile operators are required to obtain permission to use public and private lands, unless they are on an approved state trail, as is the case with the Powerline Trail.

In New Hampshire, snowmobiles must be registered annually with the New Hampshire Fish and Game Department (Fish and Game Department) unless they are exclusively used on the owner's land. Anyone not a member of a New Hampshire snowmobile club affiliated with the New Hampshire Snowmobile Association

Map D.6. Snowmobile Trails at Pondicherry Division.

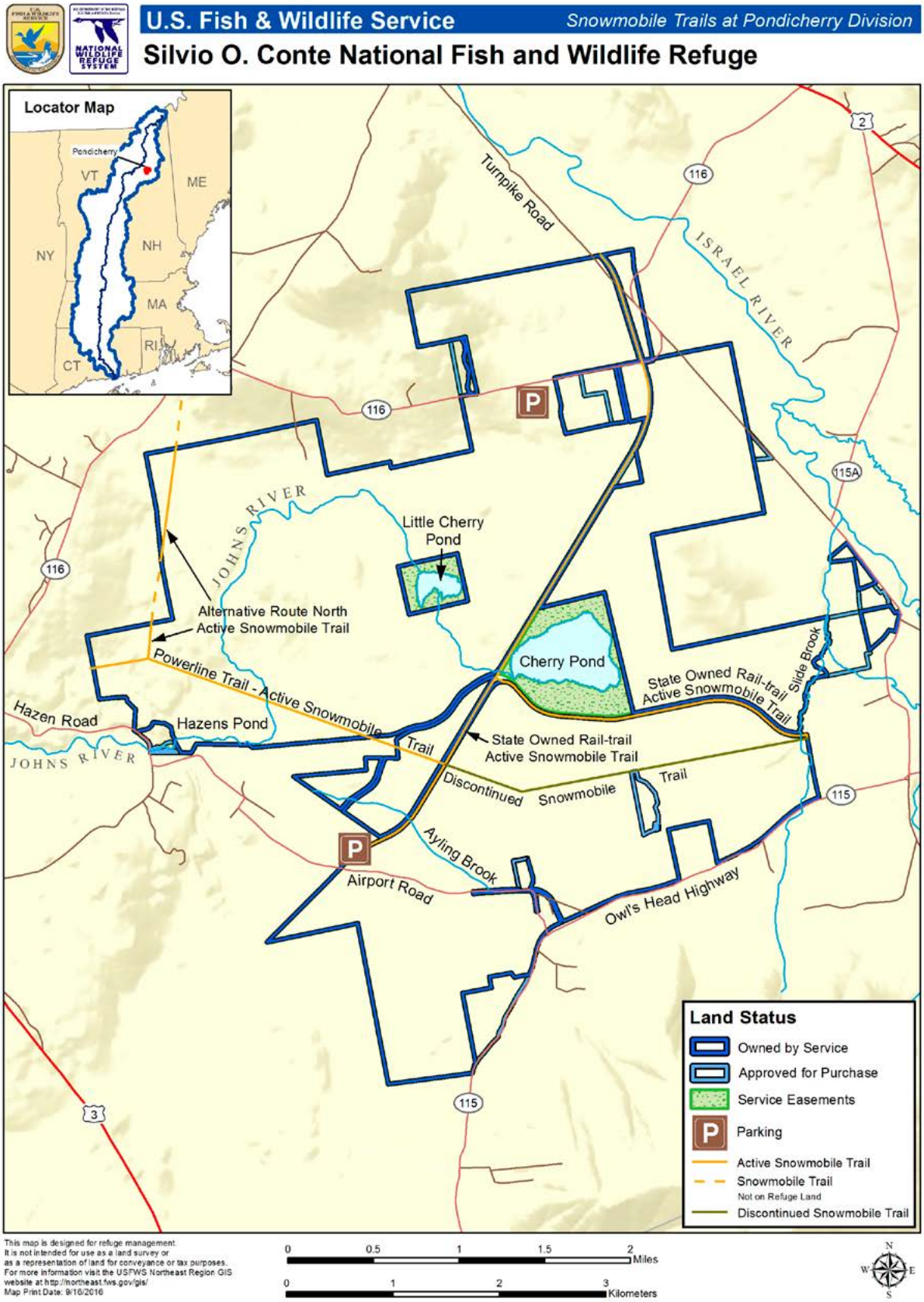

must pay an additional thirty dollar fee to the State. The Bureau of Trails is responsible for administering funds used to maintain the state snowmobile trail system (New Hampshire RSA 215-A:3). Annually, funds derived from off-highway recreational vehicle (OHRV) registrations and non-refunded gasoline taxes are made available to local OHRV clubs by the Bureau of Trails through a competitive Grant-In-Aid Program. Local clubs use these funds for trail development, maintenance, construction, grooming, and safety improvements. A portion of the registration fees also support the Fish and Game Department programs in law enforcement, search and rescue, and safety education.

Snowmobile access and use on the Pondicherry Division also will comply with applicable federal regulations (50 CFR 27.31), and Executive Orders (11644 *Use of Off-Road vehicles on the Public Lands,* February 8, 1972; and, 11989 *Off-Road Vehicles on Public Lands,* May 24, 1977). An annual SUP will be issued to the Whitefield Sno-Kings for the purpose of authorizing snowmobile use, trail maintenance, and grooming on the Pondicherry Division. One stipulation of this permit is that the State of New Hampshire must carry $2,000,000 of general liability insurance for the snowmobile club.

The Whitefield Sno-Kings will be responsible for funding and carrying out maintenance and infrastructure repair to maintain a safe snowmobile trail on the division. They will install signage (e.g. trail number and speed limit) authorized by the Refuge Manager before the trail opens in winter, maintain those signs throughout the snowmobile season, and remove them when the season ends. The local club also is responsible for grooming the Powerline Trail on the Division throughout the snowmobile season. Grooming will generally be done at night with the frequency dependent on snow and trail conditions. During the late summer or fall, with prior approval in writing by the Refuge Manager, the club may prepare the trail for the upcoming season by cutting back woody vegetation and removing trees that have fallen across the trail. Under the permit, club members may use all-terrain vehicles (ATVs) solely to access the trail for maintenance and sign activities during the late summer or fall; however, they must secure permission by notifying the Refuge Manager at least 48 hours in advance.

We will allow snowmobiling generally following Bureau of Trails snowmobiling guidelines, where otherwise compatible and consistent with applicable Service laws, policy and guidelines. The refuge manager will continue to meet with the snowmobile club and the Bureau of Trails at least annually to discuss and reach agreement on planned activities and to review special use permit stipulations and conditions. Because clubs must secure landowner permission for construction and maintenance grants, the annual meeting also will serve to identify any up-front requirements for work on the division (e.g. compliance with the National Environmental Policy Act).

There are two snowmobile trails with the division boundary that were in existence prior to Service ownership. One of these trails described as a north-south trail between Quebec Junction and Waumbek Junction is located on an old rail bed owned by the State of New Hampshire (map D.6). The other is State Snowmobile Trail 5 (Trail 5) which enters the Division from the West in Whitefield and from the East in Jefferson. A North-South alternative route of Trail 5 is on the division for about 0.7 miles on the West side. This is considered part of Trail 5 and is wholly within the utility corridor. This trail enters the division on the western boundary in Whitefield and runs east within the utility corridor until it exits near Jefferson Meadows. Historically, this trail was located within the powerline corridor and the previous owners allowed snowmobile use; however, when the railroad line east of Waumbek Junction was abandoned, the State opened it to snowmobiles during the winter and pedestrians, equestrians, and bicyclists during the non-snow months. Now snowmobilers use the state rail-trail from Waumbek Junction to the eastern Division boundary.

According to SUP conditions, the snowmobile trail will not open prior to December 1 and will close on or before April 30, each year. The actual length of the season will be dependent on having enough snow cover to protect underlying soils and vegetation.

The speed limit for the Powerline Trail will be 45 miles per hour (mph). This is consistent with the speed limit on Snowmobile Trail Number 5 adjacent to the Division. A lower speed limit for the short section of trail on the Division would be confusing and is not warranted for safety purposes because the terrain is flat with extended sight distances. Regardless of the speed limit, snowmobile operation must be reasonable and prudent as described in Federal regulations (50 CFR 27.31) and State statute (RSA 215-A:6).

Staff began monitoring snowmobile use at the Pondicherry Division during the winter of 2007 to 2008. A traffic counter was installed on the trail to evaluate the frequency of use on a daily basis. Snowmobile use has been tracked for several years on the Powerline Trail. Table D.1 shows use for the period 2007 to 2013. The wide range of annual use is related to snow conditions. The best snow years were winters 2008-2009 and 2007-2008. In contrast, there were only 91 snowmobile visits in 2011-2012 because of poor conditions.

Table D.1. Snowmobile Counter Data from the Powerline Trail.

Winter	Total Snowmobile Counts for the Powerline Trail
2007-2008	5,861
2008-2009	6,659
2009-2010	2,780
2010-2011	1,024
2011-2012	91

(e) Why is this use being proposed?
As previously stated, snowmobiles within the refuge boundary are either on a State-owned or a refuge-administered trail (map D.6). Trail 5 is a State trail that extends from the Canadian border to Massachusetts. It also links to a larger network that includes trails in Vermont, Maine, and Quebec. Locally, it serves as a connection between the town of Whitefield and trails to Berlin, Randolph, and the Mount Washington area. The active section of Trail 5 that crosses the division is west of the rail-trail (map D.6). This snowmobile trail has been used for at least 30 years (personal communication, Clint Savage, New Hampshire Bureau of Trails). No habitat management is necessary with this section or the alternate route north because both are in the utility right-of-way. The only requirement is that sufficient snow is present to protect soil and vegetation.

The alternate route north is about 6 miles long with 0.7 miles on the division all within the utility corridor. Using this trail instead of Trail 5 proper saves about 17 miles of travel and the associated fuel consumption. It is unknown how many people use this trail, but snowmobiles are counted if they travel east into the division.

Observations by staff and the Friends of Pondicherry indicate that visitation to the division drops off substantially during the winter. People continue to use the Mud Pond Trail until snow or ice makes access difficult. The other trails, Colonel Whipple Trail and Little Cherry Pond Trail are not maintained in winter and only are used by a few visitors on skis or snowshoes. There also is dispersed skiing and snowshoeing. Although the number participants are unknown, it is not thought to be substantial. The most frequently used access in winter is the snowmobile trails which are also open to skiers and snowshoers.

The Pondicherry Division was identified as a Special Focus Area (SFA) in the Silvio O. Conte National Fish and Wildlife Refuge Final Action Plan and Environmental Impact Statement (USFWS 1995). At the time it was understood to be key wetland habitat for numerous migratory birds. More complete census information from the local birding community and refuge monitoring have documented at least 238 bird species on the division with 129 of these confirmed as breeders. The high concentrations and diversity of birds during the spring through fall seasons makes the division one of the richest bird concentration areas in the State. The entire Pondicherry Basin, which includes the Division, was designated the first Important Bird Area (IBA) in the State, in recognition of the area's importance to birds.

The vast majority of migratory birds found on the Division are breeders or migrants that move south to more temperate climates during the winter. Snowmobiling at the Pondicherry Division would be inconsequential to these species because there is no temporal overlap in use and habitat composition and structure would not be altered. Some species, such as chickadees, downy woodpeckers, and nuthatches, remain in the area yearlong. Most of these yearlong residents and birds that move to the area from farther north are forest dwellers that would be minimally impacted by the snowmobile trail in the utility corridor. There are some species such as snow buntings that are attracted to open habitats and occasionally are found in the area during winter. The utility corridor affected by snowmobile use represents only a portion of the meadow habitats on the division and in close proximity including the adjacent Mount Washington Regional Airport and agricultural lands.

Key winter habitat for most resident wildlife such as big game, gallinaceous birds (e.g. grouse) would be minimally affected by snowmobile presence on the Powerline Trail. Winter thermal cover for many species at the Pondicherry Division is composed of mature evergreen conifers, especially spruce and hemlock. Because this trail is completely within the managed power line corridor on the division, little impact to resident winter wildlife is anticipated.

There are benefits of allowing snowmobile use on the Powerline Trail across the division. From the State perspective closure of this trail would create a gap in a historically popular trail. The necessary rerouting would in all likelihood entail new road crossings and trail construction on private lands, if permission could be secured. It would also be considerably longer than the current, straight-line route. Moving this trail would result in alteration of habitats not currently impacted and be a significant expense to the State. The current trail location, in the utility corridor has minimal effect on habitat composition and structure, because the entire corridor is kept in a meadow/low shrub condition by PSNH for their transmission lines. Over the years, we have had an excellent working relationship with both the local snowmobile club and the State Bureau of Trails to refuge staff and it is to our advantage for this to continue.

Snowmobiling is a popular winter activity in New Hampshire and retaining this trail would allow introduction of the division, the Refuge System, and the Service to people that may not traditionally recreate on refuges. It also extends the Service's reach because people come from throughout the Northeast to snowmobile in northern New Hampshire.

One means of reaching snowmobilers is via an informational kiosk. We would work in cooperation with the other conservation partners (i.e. New Hampshire Bureau of Trails, New Hampshire Fish and Game Department, New Hampshire Audubon, and the Friends of Pondicherry) to construct an informational kiosk at the intersection of the Powerline Trail and Presidential Recreational Trail to facilitate outreach. This is a natural stopping location that will allow the Service and partners, to connect with a substantial number of riders through interpretive displays, brochures, fact sheets, and other pertinent information that will increase their understanding of the importance of this refuge and how it fits into the larger conservation efforts of the Service.

An unknown number of snowmobilers that enter the division engage in one or more priority public uses, particularly wildlife observation and photography. Moose, deer, and coyotes are active at the Pondicherry Division in winter and seeing them during a warm day would not be unusual. The southwest shore of Cherry Pond, near the State Rail-Trail, is a popular photo stop because the vista includes Cherry Pond in the foreground and a spectacular view of the Presidential Range in the White Mountains. Today, most snowmobilers probably do not even know they are on a national wildlife refuge, however, continued use of this existing trail through the division has the potential to cultivate support from a non-traditional public sector and give them an appreciation of the conservation importance of the Pondicherry Division.

AVAILABILITY OF RESOURCES:

Sufficient refuge resources in terms of personnel and budget are available to administer snowmobiling on the refuge. The Pondicherry Division is approximately 3 hours from the Sunderland, Massachusetts headquarters, but New Hampshire Conservation Officers have the authority to enforce State regulations on national wildlife refuge lands and are the primary law enforcement agency for snowmobiling in the New Hampshire. This would be a continuation of how snowmobile laws and regulations were administered when the land was owned and managed by the previous owners. Conte Refuge shares a refuge law enforcement officer with the Umbagog National Wildlife Refuge and this officer spends part of his time in enforcement activities at the division. In addition, an active Friends Group keeps staff apprised of issues and opportunities based on their frequent visits to the Pondicherry Division. Conte Refuge staff will be responsible for onsite evaluations to resolve public use issues, monitor and evaluate impacts, maintain boundaries and signs, and meet with State officials, adjacent landowners and the interested public, when necessary. All costs for trail maintenance and repair are borne by the New Hampshire Bureau of Trails and carried out by the local snowmobile club under a refuge SUP.

Annualized costs associated with the administration of snowmobiling on the refuge are estimated below:

Initial Costs	
Document preparation/review/public comment	$2,000
Supplies (kiosk construction, brochures, kiosk notices)	$3,500
Traffic counter purchase	$2,000
Law enforcement/responding to the public	$3,000
Total Initial Costs	**$10,500**

Annual Costs	
Issue & Administer Sup (GS-12 Refuge Manager)	$1,000
Refuge Law Enforcement (GS-7 Park Ranger) *Shared with the Nulhegan Basin Division and Lake Umbagog*	$1,000
Resource Impact Evaluation (GS-12 Refuge Manager)	$2,000
Visitor Contacts (in sddition to Law Enforcement) (GS-12 Refuge Manager)	$1,000
Traffic Counter Maintenance/Data Collection/Analysis	$1,000
Miscellaneous	$500
Total Annual Costs	**$6,500**

The estimated costs listed above are primarily salary costs. Monitoring public use and providing law enforcement are required for properly administering public use programs; therefore, these operations are accounted for in budget and staffing projections. Additional law enforcement on the division is provided by Conservation Officers from the New Hampshire Fish and Game Department at no cost.

No special facilities or resources are needed to administer snowmobile use on the Pondicherry Division. There is no cost to the refuge for trail maintenance which is provided by the local snowmobile clubs with funds from the New Hampshire Trails Bureau. The Powerline Trail is not used during the rest of the year, so no additional maintenance considerations are necessary.

Based on a review of the budget allocated for recreational use management, we certify that annual funds are adequate to ensure compatibility and to administer and manage the recreational use described above.

ANTICIPATED IMPACTS OF THE USE:

Potential direct negative impacts resulting from snowmobile use on State Trail Number 5 and the northern alternative route include habitat loss and damage, pollution, and disturbance to wildlife and other refuge visitors. A positive effect of allowing this type of access will be winter access for a segment of the public that may not otherwise spend time on the refuge. By constructing an informational kiosk at a traditional stopping location, these visitors will be exposed to educational panels and materials that will inform them of the division's role in wildlife conservation in the Connecticut River watershed and northern New England, the Refuge System, and the Service.

Habitat Loss and Damage

The Powerline Corridor probably has been used since the 1970s, although the exact date of trail opening is unknown. This generally east-west oriented trail directly affects approximately 4 acres of land or about 0.06 percent of the refuge landbase. The entire trail is located in a 150-foot-wide utility corridor, which is maintained in a meadow/low shrub successional stage by PSNH. The direct loss of habitat is considered inconsequential because travel and trail grooming only commence when there is a sufficient snow pack. Trails are closed in the spring or during the season if patches of ground become exposed.

The most common impacts to vegetation attributable to snowmobiles are physical damage like bending and breaking when hit or run over (Stangl 1999). Additionally, plants are impacted during trail maintenance when

shrubs and sapling trees are trimmed back; however, similar impacts occur throughout the power line corridor where vegetative growth is retarded to protect the electrical lines. Trimming associated with the snowmobile trail is done by hand or with power brush cutters which sets back growth, but does not kill the plants. Brush cutting only occurs when woody plants encroach within the trail corridor or are tall enough to protrude above the snow surface. Plants in the snowmobile trail probably end winter dormancy later and are less productive than those that are unaffected (Stangl 1999). No federally or State-listed plants are known from the area encompassing the snowmobile trail. The amount of habitat directely affected by the snowmobile trail represents a small percentage of similar habitat in the powerline corridor on the division (8.0 percent), and of the division overall (0.06 percent).

Soils

Soil temperature fluctuations are moderated during winter by a covering of snow. When this layer is compacted, as is the case with a snowmobile trail, soil temperatures are generally lower and freezing is deeper which can be detrimental to both plants and soil microbes (Douglass et al. 1999, Stangl 1999). Impacts depend on snow depth, traffic intensity, and soil and plant susceptibility. Bog soils and shrubs are particularly susceptible to these types of impacts (Stangl 1999). Compacted snow melts rapidly and has lower water holding capacities (Douglass et al. 1999), which can increase erosion during spring melt, particularly on slopes. Probable soil impacts on the Powerline Trail include compaction and possibly localized erosion. However, there is no perceptible evidence of substantial soil or plant degradation and erosion is minimal on this generally flat trail.

Air Resources

Until recently, two-stroke snowmobiles with traditional carburetors were the only models available. Within the last few years manufacturers, responding in part to calls for quieter and cleaner burning snowmobiles, have brought direct injection, two-stroke and four stroke engines to market. Two-stroke engines are commonly preferred for their better power to weight ratio (Braven 2009), although advancements in four-stroke technology has improved their performance.

Two-stroke carbureted snowmobile engines emit pollutants, particularly hydrocarbons and particulate matter, through exhaust systems from an incomplete combustion of fuel and oil (NPS 2000, GAO 2000). Four-stroke engines are cleaner, but still produce similar levels of carbon monoxide and oxides of nitrogen (University of Wyoming 2000). A recent addition to the market has been direct injection two-stroke snowmobiles that emit fewer pollutants than the carbureted versions. In fact, these engines can cut hydrocarbon emissions by about 70 percent (NPS 2000).

According to information cited by the U.S. General Accounting Office (2000), the National Park Service concluded, primarily through analyses of studies in Yellowstone and Grand Teton national parks, snowmobiles caused increased levels of air pollution. At that time traditional two-stroke engines were the only versions readily available. On an average day in Yellowstone National Park during the 1990s over 700 snowmobiles entered the park (NPS 2000), with peak day with peak day use exceeding 2,000. The park averaged 66,619 snowmobile visits annual from 1992 to 1999. Up to one-third of the fuel can pass through the exhaust, unburned (University of Wyoming, Institute for Environment and Natural Resources 2000). Two-stroke snowmobiles reportedly produced 68 to 90 percent of the hydrocarbons and 35 to 69 percent of carbon monoxide emissions at those parks during the winter (NPS 2000). In response to concerns including air pollution, Yellowstone National Park is in the process of developing a long-term plan for winter operations, including snowmobiles (NPS 2013).

A study cited in the Final Comprehensive Conservation Plan and Environmental Impact Statement (CCP) for the Little Pend Orielle National Wildlife Refuge (Little Pend Orielle Refuge) in northeastern Washington stated that average snowmobile emission per hour is 216 grams of hydrocarbons and nitrous oxide and 564 grams of carbon monoxide per horsepower (USFWS 2000). Reportedly, a 54-horsepower two-stroke, carbureted snowmobile engine was estimated to emit approximately 360 times as much pollution per hour as an automobile. It should be noted that this information is based on the higher polluting, traditional two-stroke engines.

Other studies cited in the CCP claimed that such air pollutants can result in foliar injury, reduced productivity, tree mortality, decreased growth, altered plant populations, modifications in species diversity, increased susceptibility to pests and diseases, and pollutant depositions that melt into streams during spring snow melt.

Neither the exposure levels nor duration necessary to cause these effects were stated. These impacts were derived from a literature source and the CCP does not say whether these impacts were evident on the refuge.

The amount and impact, if any, of snowmobile emissions at the Pondicherry Division have not been studied. Neither have the effects of snowmobile exhaust emissions on habitat or wildlife, but the types of vegetative impacts described in the Little Pend Orielle Refuge CCP are not evident at Pondicherry. Annual snowmobile traffic at the division has varied from a high of 6,659 in 2008 to 2009 to a low of 91 in 2011 to 2012. These levels are substantially lower than those reported for Yellowstone, where, outside of the high concentration areas around West Yellowstone and Old Faithful, snowmobiles were not substantially affecting atmospheric deposition of the principal pollutants (Ingersoll 1998). This author reported diminished levels of carbon monoxide, a primary emission compound from two-stroke snowmobiles, at monitoring stations 20 and 100 meters from park entry points. The influence of snowmobiles on air quality is expected to diminish in the future because viable alternatives to higher polluting two-stroke snowmobiles are becoming more popular.

Pollutants are emitted by snowmobiles using the Powerline Trail. There is no evidence of chronic air pollution, similar to what was described for a high elevation site in Wyoming (Musselman and Korfmacher 2007). Undoubtedly, frequent winds dispersed pollutants more rapidly at their Wyoming study area, but dispersion also appears to be relatively quick at Pondicherry.

Aquatic Resources

The impacts of snowmobile exhaust on aquatic systems have not been well studied, but fish can acquire and accumulate hydrocarbons (Ruzycki and Lutch 1999). Adams (1975) found hydrocarbon levels and lead to be at high levels the week after ice out in a Maine pond where snowmobiles were driven over ice during the previous winter. Lead no longer is an additive in gasoline, and therefore, not a concern. Repeated packing of snow during grooming can accumulate pollutants on developed trails which are then released during spring runoff (Ruzycki and Lutch 1999). The effects of snowmobile exhaust on aquatic invertebrates have received little attention. Currently, the open section of the Powerline Trail only crosses a small drainage, Ayling Brook, north of the Mount Washington Regional Airport. This stream may support a fishery, but undoubtedly has an invertebrate population. Four streams cross the inactive trail east of Waumbek Junction. At least one of these, Slide Brook, has resident fish.

Water pollution from snowmobiles is certainly a concern, but the traffic at Pondicherry is considerably less than the study sites discussed in Olliff and Kaeding (1999). The industry movement toward less polluting snowmobiles will reduce threats to aquatic systems. Strategic monitoring may be warranted to evaluate snowmobile contributions to water pollution. The current water quality concern at the division is mercury levels which have been detected in bass from Cherry Pond, but this heavy metal is not a by-product of engine combustion.

Disturbance to Wildlife

Winter is a particularly stressful period for resident wildlife in northern latitudes due to severe weather, limited food resources, the energetic costs of moving through snow, and in some places, thermal cover limitations. Disturbance from any source during winter can tax energy reserves and be a contributing factor to winter mortality and affect reproduction. Several factors influence the impact of disturbance including timing, frequency, duration, and extent; physical condition of the individual animal; weather; habitat, particularly thermal cover, forage availability, quality, and spatial arrangement; and snow conditions. Late winter and early spring snow storms can be lethal, especially to pregnant females and those that are old, young, or in poor health.

Although individual animals certainly come into visual or auditory range of snowmobiles on the division and react by moving back into cover, there is no evidence to suggest that wildlife populations are being negatively affected. No specific evaluation of disturbance has been done at the Pondicherry Division, but a study of wildlife use in the vicinity of snowmobile trails at the Nulhegan Basin Division located in Essex County, Vermont, was recently completed (Benoit et. al. 2008). This work detected some differences in wildlife use near active snowmobile trails and unused trails, but the results were inconclusive because of confounding difference in snow accumulation between the two study years (2005 and 2008) and the habitat type adjacent to trails.

Some of the potentially negative effects of snowmobiling and other winter recreational activities on resident wildlife include:

1. Energetic costs of displacement by recreationists (Picton 1999). Herbivores, especially ungulates, operate at an energy deficit depending on stored body reserves during winter because high quality food is not readily available. Additional stress caused by recreationists flushing them from winter habitat can increase susceptibility to disease and predation, lead to higher mortality rates, and reduce productivity.

2. Displacement of animals into marginal or ineffective habitat (Clark and Wiseman 1999). High quality winter habitat is a key to survival for many herbivores, because of the close proximity of thermal protection and forage. Actions that cause animals to move to marginal habitats can lead to increased energy consumption during cold periods; increased travel distances for forage, decreased nutritional intake and reductions in thermal efficiency. Each of these can contribute to higher mortality rates.

3. Animals that are disturbed may alter their daily activity patterns leading to increased energy consumption and higher risk of predation (Clark and Wiseman 1999).

4. Direct mortality from collisions with snowmobiles.

Snowmobiling can have a limited, beneficial influence for some wildlife. Compacted snowmobile trails often serve as travel corridors because they are easier to walk on than adjacent deep snows. This was observed anecdotally in the study at the Nulhegan Basin Division (Benoit et. al. 2008). These trails may increase the probability of predator-prey confrontations. Snowmobile trails may allow some species to exploit new areas during winter. For instance, the compacted snow on trails appears to be necessary for coyotes to inhabit areas with deep snow (Bunnell et. al. 2006). This probably contributed to occupation of marginal habitats in the Northeast (Crete and Laiviere 2003) and a breakdown in spatial segregation of Canada lynx and coyotes during periods of deep snow (Bunnell et. al. 2006) where the two species overlap.

Most of the recent research of the effects of snowmobiling on wildlife and habitats has been conducted in the Greater Yellowstone Ecosystem (e.g., Olliff et al. 1999, Caslick 1997a, White et al. 2006). The conditions under which these studies were conducted including the number of snowmobiles per day (i.e. over 1,000 on a busy day) (Sacklin et al. 2000), affected habitats, and even species studied (e.g. bison and elk) may not have direct applicability to the Northeast and the Pondicherry Division. Older research was limited to studying two-stroke, traditional carburetion snowmobiles that used leaded fuel. These machines are much noisier than newer models and emit more pollutants, which at the time, included lead. Although that type of snowmobile is still the most common, newer direct-injection and four-stroke engines which are much less polluting are becoming more popular. So the application of the body of work on snowmobiling effects may not always be relevant to the situation at Pondicherry.

Most wildlife-related research has been limited to studying the effects of snowmobiling on individuals, then extrapolating potential impacts to populations. There has been little work done on the influence of snowmobile use on population dynamics. Although no direct research has been done on winter recreational effects, including snowmobiles, at Pondicherry, the New Hampshire Fish and Game Department completed its 10-year management plans for moose, white-tailed deer, bear, and turkey (New Hampshire Fish and Game Department 2005). Their monitoring and management indicates that big game populations in northern New Hampshire, where there is a widespread network of snowmobile trails, are stable or increasing.

Most of the Federal trust species for which the division was established (e.g. neotropical migratory birds, waterfowl, American woodcock) are on winter ranges well before the start of snowmobile season and do not return in the spring until after the trails close. The trail on Service-owned land does not intersect any habitats that would serve as winter concentration areas.

Snowmobile travel on and through the division is limited to the established snowmobile trails (i.e. Powerline Trail and the State-owned Presidential Recreational Trail), confining disturbances to a specific area. The timing, location, and occurrence of snowmobile use are fairly predictable which allows wildlife to habituate (Biel 1999, Freddy et al. 1986). At least one study found that heart rates increased whenever snowmobiles were present with no apparent habituation (Moen et al. 1982), although the implications to survival were not assessed. Trail maintenance with a groomer occurs at night when conditions warrant. Assuming the use of the powerline corridor for wildlife is compromised by snowmobile use, the total area impacted is approximately 89 acres (150 feet wide and 4.9 miles long), representing about 1 percent of the Pondicherry Division.

Wildlife that hibernate or go into a dormant state during the winter such as black bears, reptiles, amphibians are not directly impacted by snowmobile travel because use is limited to the trail in the utility corridor which affords little, if any, good winter hibernaculum habitat. Some small mammals (e.g. voles) remain active below the snow surface (i.e. subnivean habitat). The compacted snowmobile trail may be a barrier to their movement and can alter subnivean conditions such as lowering temperatures (Caslick 1997b). However, only a small portion of habitat at the division (0.1 percent) and in the utility corridor (8 percent) might be marginalized for these species. The snowmobile has a limited area of impact on small mammal populations that utilize the early succession/meadow habitats of the power line corridor.

Impacts to Visitors

Snowmobile engine noise increases with the amount of traffic and proximity of the listener. Yellowstone National Park officials believed that snowmobile use conflicted with the solitude of Park visitors, and the noise had an impact on the natural quiet of the park setting (GAO 2000). Snowmobile noise levels have not been documented at the Pondicherry Division; however, New Hampshire regulations require compliance with the Snowmobile Safety and Certification Committee standards. The standard for a snowmobile at full throttle is 78 decibels plus 2 decibels at 50 feet and 73 decibels plus 2 decibels for snowmobiles moving at 15 miles per hour. These levels approximately equate to that experienced along a busy street *(http://www.asha.org/public/hearing/disorders/noise.htm)*. Snowmobile noise at Pondicherry is loudest near the intersection of the Powerline Trail and (Presidential Recreational Trail) where traffic from north/south and east/west meet. Although the sound is present to some degree on much of the refuge, attenuation reduces the levels so that if discernable, it becomes more of a background sound on the northern portions of the division. There are few, if any, areas of the Division completely devoid of motorized sounds because it is surrounded by public roads, including two State highways.

Currently, pedestrian visitors have limited developed access during winter. The only maintained trails within the division boundary are Presidential Recreational Trail and the Powerline Trail. People hiking, snowshoeing, or skiing have the option of using these groomed snowmobile trails, the Colonel Whipple and Little Cherry Pond hiking trails, the gravel portion of Mud Pond Trail, or the old logging road system. Many people choose the rail-trail because it the grade is flat and it is easy follow. However, skiing and snowshoeing on the existing hiking trails and old road system is becoming increasingly popular for people that want a more solitary experience. Having hikers and snowmobilers share a trail is not an ideal situation, but they have coexisted on this State trail for many years. These trails and the old logging road network help to spatially separate these two uses, giving people that seek more of a backcountry experience additional options at the Pondicherry Division.

Summary of Anticipated Impacts

In summary, many studies identify and discuss snowmobile impacts to wildlife, their habitats, and other outdoor recreational users. Clearly, snowmobiles can have an effect on wildlife when the two are in close proximity. The typical reaction of wildlife is to move into cover to avoid the disturbance. Snowmobile use on the Pondicherry Division will be restricted to the Powerline Trail, the Trail 5 cut-across near the western boundary, and the State-owned and managed Presidential Recreational Trail. Based on available literature and monitoring at the nearby Nulhegan Basin Division impacts to wildlife are primarily to individual animals that come in contact with the trail when snowmobiles are present. Reactions are subject to a variety of factors, but there is no evidence that snowmobile use on the Powerline Trail will not have a deleterious impact on wildlife populations at Pondicherry, nor the federal trust species for which the division was established (i.e. migratory birds). At this time, based on professional judgment and the available information including the limited extent of the affected area, wildlife species present during the winter, and impacted habitats, regulated snowmobile use on the Powerline Trail does not materially interfere with or detract from the purposes for which the refuge was established or the mission of the Refuge System.

Snowmobile use does provide the public with an opportunity to enjoy and experience the winter landscapes and engage in wildlife-oriented recreation, including priority public uses, in support of refuge purpose number 6. It also gives the refuge a chance to inform a non-traditional visitor about the Pondicherry Division, Conte Refuge, Refuge System, and the Service. From the perspective of a snowmobiler and the New Hampshire Bureau of Trails, the trail on refuge property is an important connection to the trail networks that lie beyond the refuge boundary.

PUBLIC REVIEW AND COMMENT:

A finding of appropriateness and this compatibility determination were distributed for public comment for 90 days from August 18, 2015 to November 16, 2015 as part of the review of the Silvio O. Conte Refuge's draft CCP/EIS. Comments we received on this use were considered as we developed this final determination. This determination will undergo another 30-day review with release of the final CCP/EIS. A summary of comments received on the draft plan is included in appendix O of the final CCP/EIS.

DETERMINATION (CHECK ONE BELOW):

____ Use is not compatible

__X__ Use is compatible, with the following stipulations

STIPULATIONS NECESSARY TO ENSURE COMPATIBILITY:

The administration of snowmobile access and use on the refuge will comply with 50 CFR 27 and New Hampshire RSA 215-A. The administration and management of the use as described in Section "(d)" above, and consideration, evaluation, and assessment of the impacts of the use as described in the "Anticipated Impacts of the Use" above, document our compliance with Executive Orders 11644 (Use of Off-Road Vehicles on the Public Lands, February 8, 1972) and 11989 (Off-Road Vehicles on Public Lands, May 24, 1977) as summarized below. Although these executive orders apply to off-road vehicles in general, this compatibility determination pertains exclusively to snowmobiling.

(1) Specific areas and trails shall be designated where off-road vehicle (ORV) use is either permitted or prohibited.

Public snowmobile travel on the refuge will be restricted to the Powerline Trail, part of State Snowmobile Trail 5 and the north-south alternative route on the western edge of the division which will be depicted on local snowmobile maps and signed on the division. There also will be signs that require snowmobilers to stay on the groomed trail. A map with this snowmobile trail will be posted on the informational kiosks, provided to local retail outlets, and given to local personnel of the New Hampshire Bureau of Trails and Fish and Game Department for distribution.

(2) Designated areas and trails shall be located to minimize damage to soil, watershed, vegetation, or other resources of the public lands.

The Powerline Trail and alternative route are located in a PSNH utility corridor easement. Snowmobile impacts to natural communities and native wildlife are limited because vegetation development and succession are periodically retarded to keep plants from growing up into the power lines. Damage to soils and vegetation is minimal because the ground is frozen and a snow cover must be present for the use to occur; damage to water is minimized because snowmobiles travel on a hard-packed snow cover, not across water; and, damage to other resources is limited by restricting snowmobile use to the established trails.

(3) Areas and trails shall be located to minimize harassment of wildlife or significant disruption of wildlife habitats.

Wildlife harassment is minimized because: (a) trust species (i.e. migratory birds) are generally absent from Pondicherry during the winter; (b) many resident species are dormant (e.g. black bears), under ice (e.g. beavers, muskrats, fish), or snow (i.e. subnivean wildlife); c) the Powerline Recreational Trail does not intersect areas or habitats with significant concentrations of wildlife, including deer winter yards; and, (d) most active wildlife species during the winter are presumed to have acclimated to snowmobiles traveling through the powerline corridor during the past 30 plus years. The restricted area available and predictability of use, in time and space, make it reasonable to assume that resident wildlife populations have adapted to this long-term use.

(4) Trails shall not adversely affect the natural, aesthetic, or scenic values of the lands.

Neither the Powerline Trail nor the alternative route will measurably affect the natural, aesthetic, or scenic values because: (a) The amount of land directly impacted by the active trail is about 4 acres or about 0.6 percent of the 6,405-acre division; (b) The trail lies completely within a 150-foot utility corridor easement where

vegetative succession is retarded to keep trees from interfering with the power lines. The visual appearance of the meadow-like corridor is markedly different than the surrounding forest. Thus the presence of the snowmobile trail in this unnatural setting does not detract from the natural, aesthetic, or scenic values of the refuge as a whole; (c) During the spring to fall seasons the trail is hard to discern in the meadow-like corridor. The snow pack required for snowmobiling protects the ground surface, and the mechanical treatment of vegetation on the trail itself does not permanently damage plants; (d) Trail signs are few in numbers and only up during the winter season; and, (e) Litter associated with snowmobiling is removed by the snowmobile clubs during and at the end of the season.

(5) Operating conditions shall be directed at protecting resource values, preserving public health, safety, and welfare, and minimizing use conflicts.

Resources values are protected because snowmobile operating dates require sufficient snow pack to protect soils and vegetation from being damage. Use is discontinued if conditions become unsuitable. Public safety, health, and welfare are preserved and use conflicts minimized through the applicable provisions of 50 CFR 27.31, New Hampshire RSA 215-A. Specifically, use is limited to the designated snowmobile trail, the State speed limit applies on this trail, noise level limits must comply with State regulations, vehicles must meet the Federal and State standards for safe operation, reasonable and prudent operation is required, and unsafe trail conditions trigger closure. Pedestrian visitors are not precluded from using the snowmobile trail. They can snowshoe or ski anywhere else at Pondicherry to avoid snowmobiles, including the network of logging roads.

(6) Areas and trails where ORV use is permitted are well-marked and information about location and conditions for use are made available to the public.

Recreational snowmobile use at the Pondicherry Division is limited to the Powerline Trail and the north-south alternative route, which appear on local club and State trail maps. An informational kiosk is located at the rail trail parking lot on Airport Road. The refuge will post a map of the division notifying snowmobilers that travel through the refuge is restricted to the Powerline Trail and the State's Presidential Recreational Trail, and that no off-trail travel is permitted. Standard State or refuge snowmobile trail signs will be posted at key points. Other entry points will have "No Snowmobile" signs erected, if necessary, to ensure people are aware that snowmobile use is not allowed elsewhere on the division. Updated trail conditions are available from the New Hampshire Bureau of Trails either by phone or on their web site. Visitors also can contact the refuge to find out about current conditions. SUPs issued to Whitefield Sno-Kings contain specific special conditions that govern their operation and use of the trail.

(7) Provisions are made for law enforcement.

The Pondicherry Division is unstaffed, but a law enforcement officer stationed at the Nulhegan Basin Division, approximately 45 minutes driving time, will patrol the snowmobile trail. Officers from the New Hampshire Fish and Game Department and Bureau of Trails have conducted law enforcement on this trail in the past as part of their normal duties, and will continue to do so on the division.

(8) Effects of ORV use must be monitored.

Snowmobile use on the refuge will be monitored and effects evaluated. Monitoring will be done via observations of trail use by refuge staff, state personnel, and members of the Friends of Pondicherry, a local volunteer group. Federal and State law enforcement patrols will help ensure that people comply with regulations to minimize biological and recreational conflicts. Empirical use data will be collected with a trail counter on the Powerline Trail. Condition of the trail itself will be evaluated at the end of each season and periodically during the season to ensure that unacceptable resource damage is not occurring.

(9) If it is determined that ORV use is causing considerable adverse effects on soil, vegetation, wildlife, wildlife habitat or cultural or historic resources of particular areas or trails, those areas must be closed until adverse effects are eliminated or preventive measures have been implemented to prevent recurrence.

As stated in Number 8 above, monitoring use of the Powerline Trail will be an ongoing process. Because there is only one trail on Service property at Pondicherry and it lies completely within a managed utility corridor, the primary resource concerns are impacts to soil, surface water, and resident winter wildlife. Both refuge staff and personnel from the Bureau of Trails will monitor trail conditions to ensure that there is sufficient snow pack to support snowmobile use. The trail does not traverse any habitats key to wintering wildlife such as

deer thermal cover; however, the trail will have limited effect on species that spend the winter under the snow surface in the utility corridor.

Should unacceptable resource impacts occur, appropriate action will be taken to alleviate problems. Actions may include more restrictive limitations on engine exhaust emissions or noise levels, limiting the number of snowmobiles on the refuge, and trail relocation or closure. These or other actions may be necessary in the future to ensure that snowmobile use of the Powerline Trail does not materially interfere with or detract from refuge purposes or the mission of the Refuge System, as previously described. Compatibility could be reconsidered before the term of this Compatibility Determination should the conditions change significantly, or there is new information regarding the effects of snowmobiling that warrants an updated evaluation.

The Powerline Trail is used specifically for snowmobiles. It does not serve as a hiking trail during other times of the year so there is no historical pattern of pedestrian use, except for snowshoers and skiers that may use it during snowmobile season. Snowmobiles are not allowed on any of the developed pedestrian trails on the division (map D.6).

(10) Use outside of daytime hours (one-half hour before sunrise and one-half hour before sunset requires a special use permit.

JUSTIFICATION:

This use has been determined to be compatible provided the stipulations necessary to ensure compatibility are implemented, and the use does not exceed thresholds necessary for visitor safety and resource protection. This use is not expected to materially interfere with or detract from the mission of the Refuge System nor diminish the purposes for which the refuge was established, will not pose significant adverse effects on refuge resources, will not interfere with public use of the refuge, nor cause an undue administrative burden.

Signature:

SIGNATURE:

Refuge Manager: _____ _____
(Signature) (Date)

CONCURRENCE:

Regional Chief: _____ _____
(Signature) (Date)

MANDATORY 10-YEAR RE-EVALUATION DATE: _____

LITERATURE CITED:

Adams, E.S. 1975. Effects of lead and hydrocarbons from snowmobile exhaust on brook trout (*Salvelinus fontinalis*). Transactions of the American Fisheries Society 2:363-373.

Biel, M. 1999. Effects of winter recreation on habituated wildlife. *In:* Olliff, T., K. Legg, and B. Kaeding, editors. Effects of winter recreation on wildlife of the Greater Yellowstone Area: a literature review and assessment. Report to the Greater Yellowstone Coordinating Committee. Yellowstone National Park, Wyoming. 315 pages.

Braven, K.D. 2009 KLK751: Development of an ethanol fueled, two-stroke, direct-injection snowmobile for use in the clean snowmobile challenge and national parks. University of Idaho. Moscow, ID. Accessed June 2013 at: *http://www.webpages.uidaho.edu/niatt/research/Project_Descriptions/KLK751.htm*

Bunnell, K.D., J.T. Flinders, M.L. Wolfe. 2006. Potential impacts of coyotes and snowmobiles on lynx conservation in the Intermountain West. Wildlife Society Bulletin 34(3):828-838.

Caslick, J.W. 1997a. Appendix I: Impacts of winter recreation on wildlife in Yellowstone National Park: A literature review and recommendations. *In:* Olliff, T., K. Legg, and B. Kaeding, editors. Effects of winter recreation on wildlife of the Greater Yellowstone Area: a literature review and assessment. Report to the Greater Yellowstone Coordinating Committee. Yellowstone National Park, Wyoming. 315 pages.

Caslick, J.W. 1997b. Appendix III. Matrix of winter recreation effects on wildlife. *In:* Olliff, T., K. Legg, and B. Kaeding, editors. Effects of winter recreation on wildlife of the Greater Yellowstone Area: a literature review and assessment. Report to the Greater Yellowstone Coordinating Committee. Yellowstone National Park, Wyoming. 315 pages.

Clark, W. and R. Wiseman. 1999. Effects of development on wildlife. *In:* Olliff, T., K. Legg, and B. Kaeding, editors. Effects of winter recreation on wildlife of the Greater Yellowstone Area: a literature review and assessment. Report to the Greater Yellowstone Coordinating Committee. Yellowstone National Park, Wyoming. 315 pages.

Crete, M. and L. Lariviere. 2003. Estimating the costs of locomotion in snow for coyotes. Canadian Journal of Zoology 81:1808-1814.

Douglass, K.S., J. Hamann, G. Joslin. 1999. Vegetation, soils, and water. *In:* G. Joslin and H. Youmans, coordinators. Effects of recreation on Rocky Mountain wildlife: A Review for Montana. Committee on Effects of Recreation on Wildlife, Montana Chapter of The Wildlife Society. 307pp.

Freddy, D.J., W.M. Bronaugh, M.C. Fowler. 1986. Responses of mule deer to disturbance by persons afoot and snowmobiles. Wildlife Society Bulletin 14(1): 63-68.

Ingersoll, G.P. 1999. Effects of snowmobile use on snowpack chemistry in Yellowstone National park, 1998. U.S. Geological Survey. Water-Resources Investigations Report 99-4148. Denver, CO. 24pp.

Moen, A.N., S. Whittemore, B. Buxton. 1982. Effects of disturbance by snowmobiles on heart rate of captive white-tailed deer. New York Fish and Game Journal 29(2):176-183.

Musselman, R.C. and J.L. Korfmacher. 2007. Air quality at a snowmobile staging area and snow chemistry on and off trail in a Rocky Mountain subalpine forest, Snowy Range, Wyoming. Environmental Monitoring and Assessment 133:321-334.

New Hampshire Fish and Game Department. 2005. New Hampshire Big Game Plan. Species management goals and objectives. 2006-2015. New Hampshire Fish and Game Department. Concord, NH. 21pp. Accessed June 2013 at: *http://www.wildlife.state.nh.us/Hunting/Hunting_PDFs/NH_Big_Game_Plan_FINAL.pdf.*

Olliff, T., K. Legg, and B. Kaeding, editors. 1999. Effects of winter recreation on wildlife of the Greater Yellowstone Area: a literature review and assessment. Report to the Greater Yellowstone Coordinating Committee. Yellowstone National Park, Wyoming. 315 pages.

Picton, H.D. 1991. Energetic costs of wildlife displacement by winter recreationists. *In:* Olliff, T., K. Legg, and B. Kaeding, editors. Effects of winter recreation on wildlife of the Greater Yellowstone Area: a literature review and assessment. Report to the Greater Yellowstone Coordinating Committee. Yellowstone National Park, Wyoming. 315 pages.

Ruzycki, J. and Lutch, J. 1999. Impacts of two-stroke engines on aquatic resources. *In:* Olliff, T., K. Legg, and B. Kaeding, editors. Effects of winter recreation on wildlife of the Greater Yellowstone Area: a literature review and assessment. Report to the Greater Yellowstone Coordinating Committee. Yellowstone National Park, Wyoming. 315 pages.

Sacklin, J.A., K.L. Legg, M.S. Creachbaum, C.L. Hawkes, G. Helfrich. 2000. Winter visitor use planning in Yellowstone National Park and Grand Teton National Parks. *In:* Cole, David N.; McCool, Stephen F.; Borrie, William T.; O'Loughlin, Jennifer, comps. 2000. Wilderness science in a time of change conference, Volume 4: Wilderness visitors, experiences, and visitor management; 1999. May 23–27; Missoula, MT. Proceedings RMRS-P-15-VOL-4. Ogden, UT: U.S. Department of Agriculture, Forest Service, Rocky Mountain Research Station.

Stangl, J.T., 1999. Effects of winter recreation on vegetation. *In:* Olliff, T., K. Legg, and B. Kaeding, editors. Effects of winter recreation on wildlife of the Greater Yellowstone Area: a literature review and assessment. Report to the Greater Yellowstone Coordinating Committee. Yellowstone National Park, Wyoming. 315 pages.

U.S. General Accounting Office (GAO). 2000. Agencies Need to Assess the Impact of Personal Watercraft and Snowmobile Use. GAO/RCED-00-243.

U.S. Department of Interior, Fish and Wildlife Service (USFWS). 2000. Little Pend Oreille National Wildlife Refuge Final Comprehensive Conservation Plan and Environmental Impact Statement.

U.S. Department of Interior, National Park Service (NPS). 2000. Air quality concerns related to snowmobile usage in national parks. Denver, CO.

____. 2013. Yellowstone in winter: the role of snowmobiles and snowcoaches. Yellowstone National Park, WY. Accessed October 2016 at: *http://www.nps.gov/yell/parkmgmt/role.htm*

U.S. General Accounting Office (GAO). 2000. Agencies need to assess the impact of personal watercraft and snowmobile use. Report to Congressional Requesters GAO/RCED-00-243. Washington, D.C. 85pp.

University of Wyoming, Institute for Environment and Natural Resources. 2000. Review of research related to the environmental impact statement for the Yellowstone and Grand Teton National Parks and the John D. Rockefeller, Jr. Memorial Parkway. Laramie, WY. 83pp.

White, P.J., T. Davis, J.J. Borkowski, R.A. Garrott, D.P. Reinhart, and D.C. McClure. 2006. Behavioral responses of wildlife to snowmobiles and coaches in Yellowstone. Yellowstone National Park and Montana State University, Bozeman, MT. Accessed June 2013 at: *http://www.nps.gov/yell/parkmgmt/upload/2006wildliferpt_final.pdf*

COMPATIBILITY DETERMINATION

USE:

Furbearer Management (Trapping) on the Nulhegan Basin Division

REFUGE NAME:

Silvio O. Conte National Fish and Wildlife Refuge (Conte Refuge)

DATE ESTABLISHED:

October 3, 1997

ESTABLISHING AUTHORITY

- Silvio O. Conte National Fish and Wildlife Refuge Act (Public Law 102-212).
- Migratory Bird Conservation Act of 1929.
- Land and Water Conservation Fund Act of 1965.

PURPOSE(S) FOR WHICH ESTABLISHED:

- To conserve, protect, and enhance the Connecticut River populations of Atlantic salmon, American shad, river herring, shortnose sturgeon, bald eagles, peregrine falcons, osprey, black ducks, and other native species of plants, fish, and wildlife.
- To conserve, protect, and enhance the natural diversity and abundance of plant, fish and wildlife species and the ecosystem upon which these species depend within the refuge.
- To protect species, listed as endangered or threatened, or identified as candidates for listing, pursuant to the Endangered Species Act of 1973 (ESA) as amended (16 U.S. 1531 et seq.).
- To restore and maintain the chemical, physical, and biological integrity of wetland and other waters within the refuge.
- To fulfill the international treaty obligations of the United States relating to fish and wildlife and wetlands.
- To provide opportunities for scientific research, environmental education, and fish and wildlife oriented recreation and access to the extent compatible with the other purposes stated in this section.

THE NATIONAL WILDLIFE REFUGE SYSTEM MISSION:

To administer a national network of lands and waters for the conservation, management, and where appropriate, restoration of the fish, wildlife, and plant resources and their habitats within the United States for the benefit of present and future generations of Americans.

DESCRIPTION OF USE:

(a) What is the use? Is it a priority public use?
The use is furbearer management. We consider furbearer management to be a refuge management economic activity. It is not a priority public use of the National Wildlife Refuge System (Refuge System) under the National Wildlife Refuge System Administration Act of 1966 (16 U.S.C. 668dd-668ee), as amended by the National Wildlife Refuge System Improvement Act of 1997.

(b) Where would the use be conducted?
The Nulhegan Basin Division (division) has been open to trapping since 2001and this activity occurred during the decades preceding U.S. Fish and Wildlife Service acquisition. The Conte Refuge proposes to continue furbearer management through trapping throughout the division. As we acquire lands in the future for this division (e.g. McConnell tract), assuming our preferred-alternative is approved for the comprehensive conservation plan, we propose to allow trapping as a tool to manage wildlife populations on the division, and where the management need is supported by the respective State fish and wildlife agency. Prior to opening refuge lands to trapping in 2017, we would complete a NEPA compliant document, a compatibility determination, and a furbearer management plan. Trappers would be issued a special use permit (SUP) to trap on refuge lands, and based on data from previous years we expect an average of three SUPs would be issued each year. Due to this light demand, trapping zones have not been established. This use would be evaluated on a yearly basis, and areas would be closed to trapping if it is determined that this management activity directly conflicts with other user groups or biological goals and objectives. If a conflict is observed, trappers would be notified and a special condition(s) to remedy the situation would be attached to the SUP.

(c) When would the use be conducted?
This activity would correspond to the dates established annually by the Vermont Fish and Wildlife Department (VFWD); the trapping season generally spans late-fall to mid-winter *http://www.vtfishandwildlife.com/cms/One.aspx?portalId=73163&pageId=190440#Furbearer* Trapping Seasons (accessed November 2016). Access to the division would occur 24 hours a day, 7 days a week.

(d) How would the use be conducted?
The furbearer management program would be implemented through the special use permit (SUP) process and, if needed, the refuge would work with the VFWD to implement any special furbearer management regulations. Otherwise, the program would follow the current state regulations. Administering the program under an annual SUP would allow the refuge manager to have a ready list of contacts for requests for specific management needs to accomplish refuge objectives.

We will require a harvest report from each trapper following the close of the trapping season. The report includes data about the trapping effort (trap-days), the time span of trapping by species, the number of traps used, the number of target and non-target species harvested, the refuge areas trapped, and remarks on observations of wildlife or other noteworthy ecological information. We will also require that trappers report any sign of lynx within the areas they trap to the Refuge Manager within 48 hours of observations. This data is used to monitor potential impacts of this use on refuge populations of furbearers. If the required information is lacking for a trapper from the previous year, we will not issue the SUP for the upcoming season.

As specified in the Nulhegan Basin Division Furbearer Management Plan, trappers must follow State regulations and trapping seasons on refuge lands. Refuge-specific regulations are provided to each trapper under "special conditions" of the issued SUP. The refuge would allow furbearer management for the following target species: beaver, bobcat, mink, fisher, coyote, fox, muskrat, otter, raccoon, skunk, and weasel.

The refuge manager reserves the authority to regulate the numbers of target species taken in any one location, as well as the number of trappers or number of traps per trapper allowed when it is determined that unacceptable resource impacts may occur or are occurring. If we determine that limits on the number of trappers is necessary, we would follow the procedures outlined in the Service's Refuge Manual (5 RM 17.11) and other applicable laws and regulations (see also 50 C.F.R. 29.1). Trappers, as with all visitors, are allowed off trail; however, off-trail use is limited to pedestrian access only (e.g., walking, snowshoeing, skiing).

The current state regulations for trapping can be found at *http://www.vtfishandwildlife.com/cms/One.aspx?portalId=73163&pageId=190626.* Additionally, due to the confirmed presence of Canada lynx (lynx) in northeastern Vermont, VFWD in 2014 enacted new trapping regulations for State Wildlife Management Unit E (WMU E), which includes the division. The special regulations for WMU E are attached, and can be found at *http://www.vtfishandwildlife.com/UserFiles/Servers/Server_73079/File/Hunt/trapping/2013_Lynx_Regulation_Annotated.pdf* (accessed August 2016). Also attached is a copy of the SUP.

(e) Why is this use being proposed?
Trapping on refuges is considered a refuge economic use, per Service policy (603 FWS 2, part 2.6 (N)). As per 50 C.F.R. 29.1, we may only allow economic uses of a refuge natural resource where the use contributes to achieving refuge purposes or the Refuge System mission. We would conduct furbearer management: (1) as a wildlife management tool that can maintain sustainable populations and habitat quality, (2) as a mechanism to collect species information that otherwise would be expensive and difficult to obtain using refuge resources, and (3) as a way to maintain a data set that may lead to research on furbearer (and other wildlife) occurrence, activity, movement, population status, and ecology. By maintaining a trained, experienced group of trappers, the Service can use their skills and local knowledge to perform or assist in valuable management or research functions. Trappers could potentially provide assistance with the implementation of structured management objectives, such as the alleviation or reduction of wildlife damage conflicts, negative interactions among species, and habitat modifications.

A trapping program also fosters the appreciation of wildlife and nature, wildlife observation, a greater understanding of ecological relationships, stewardship of natural resources, and inter-generational transfer of the methodologies of renewable resource use. Trapping is an activity in which family members and friends often participate and share joint experiences that broaden appreciation of natural resources and ecological awareness (Daigle et al. 1998).

AVAILABLITY OF RESOURCES:

The financial resources necessary to provide and administer this use at its current level are now available, and we expect them to be available in the future. The refuge manager would provide overall administration of the program. A wildlife biologist would be required to evaluate furbearer activity, potential and current impacts on refuge resources, and potentially prescribe harvest objectives or quotas. The biologist would also evaluate trapper data, compile trapping reports, and help process SUPs. The refuge's Federal wildlife officer, in coordination with other law enforcement agencies, would check refuge trappers and ensure compliance with State and refuge regulations.

A breakdown of the projected annual cost of the trapping programs is shown below:

Law Enforcement and Monitoring:	$1,000
Biological staff time (program oversight and monitoring):	$6,000
Total:	**$7,000**

ANTICIPATED IMPACTS OF THE USE:

The impacts of furbearer management on the purposes of the refuge and mission of the Refuge System can be either direct or indirect, and may have negative, neutral, or positive impacts on refuge resources. Direct effects of trapping include the removal of individuals of target (i.e., furbearer) and potentially non-target species. Indirect impacts include reduced production among migratory birds resulting from disturbance during the pair bonding/nesting season, increased recruitment of birds as a result of removing predators of birds or their nests, or habitat change as a consequence of the removal of species that directly alter habitats (e.g., beavers or muskrats).

Impacts to furbearers:

The impacts of the furbearer management program obviously include those on the furbearer populations themselves. Trapping harvests and removes individuals of the species. The anticipated direct impacts of trapping on wildlife would be a temporary reduction of furbearer populations in those areas where furbearers exist. The removal of furbearers from those areas would maintain furbearer populations at levels compatible with the habitat and with refuge objectives, minimize furbearer damage to facilities and wildlife habitat, minimize competition with or interaction among wildlife populations and species that conflict with refuge objectives, and minimize threats of disease transmission to wildlife and humans.

VFWD considers harvested furbearer populations throughout the State to be stable with indices tracking within the expected ranges of these species' year-to-year cyclic variations (C. Bernier, VFWD, personal communication). They employ the following sources of information in developing furbearer harvest regulations:

(1) Fur dealer reporting: All licensed Vermont fur dealers are annually required to report the number of pelts per species they've purchased from Vermont's furbearer trappers and hunters. This system provides an index of between-year fluctuations in pelt sales, but underestimates the true magnitude of the harvest because the annual totals exclude out-of-state pelt sales by trappers to non-resident fur dealers.

(2) Trapper mail survey: The voluntary trapper mail survey was implemented in 1987. This annual mail survey is designed to collect data on a per-species basis related to the magnitude and distribution of harvest, the effort expended, the average price received, and the markets into which pelts were sold including to out-of-state fur dealers. Since implementing the mail survey, Furbearer Management Project staff has been able to use the out-of-state pelt sale and average pelt price data in concert with the fur dealer report data to extrapolate the magnitude and total value of the annual furbearer harvest. Additionally, the catch per unit effort and incidental take of each species is calculated annually based on data collected via the mail survey. Other than bobcat, fisher, and river otter, the trapper mail survey is the primary method for monitoring furbearer populations in Vermont.

(3) Pelt tagging and carcass collection of bobcat, fisher, and river otter: Legal harvest of bobcat, fisher, and otter is annually monitored through an intensive program requiring both the tagging of pelts and the surrendering of carcasses of these species. Information gathered via pelt tagging includes the town, watershed/wildlife management unit, and date of harvest, as well as, the CITES tag number (otter and bobcat), type of take (e.g., trapped, hunted, incidental, nuisance, road-killed), and the target species. Carcasses collected via this program are annually examined to determine the sex, age, and physical condition of each specimen. Sex and physical condition are determined through internal examination of carcasses whereas ages are obtained by the examination of tooth sections at a commercial laboratory. In an effort to minimize costs associated with this program, a variety of trained volunteers (e.g., trappers, students, college professors, cooperating agencies) are used to collect data at the necropsy sessions. Pelt tagging and necropsy data are annually analyzed, tabulated, and mapped to ascertain not only the distribution and magnitude of the harvest of these species, but also the age and sex structure of these harvested populations as well.

(4) Collection of muskrat sex and age data: Furbearer Management Project staff annually attends Vermont Trappers Association fur auctions in December and March to collect sex and age data on harvested muskrat. The VFWD also recently initiated a request for muskrat carcasses as part of a regional effort to collect reproductive information. Data collected via these efforts will be analyzed once sufficient quantities of samples have been assembled.

(5) Collection and analysis of genetic samples: As opportunities and needs arise, Furbearer Management Project staff will collect genetic samples for use in furthering our understanding of these populations. Project staff may also contribute samples and participate in regional efforts to study the genetic composition of various furbearer populations.

Beaver, muskrat, fisher, and mink are the most common furbearers harvested from the division (Table D.2). During the 2001 through 2016 trapping seasons, the number of trappers has ranged from a high of 5/year in 2002 to 1/year in 2003, 2004, 2010, 2014, 2015, and 2016. The average number of trappers during this 16 year period is 2.5 trappers/year.

Table D.2. Harvest Summary for 2001–2016

Species trapped	Total number of individuals trapped	Total number of trap days
Beaver	171	294
Bobcat	1	59
Coyote	31	73
Fisher	59	246
Mink	50	173
Muskrat	78	137
Otter	13	110
Raccoon	2	4
Weasel	8	10
Total for 2001–2016	413	1,106

A national program operated under the guidance of the Fur Resources Technical committee of the International Association of Fish and Wildlife Agencies (IAFWA 1998) systematically improves animal welfare through trap testing and the development of "Best Management Practices (BMPs) for Trapping Furbearers in the United States." The refuge would cooperate with and contribute to the development and implementation of those BMPs by practicing an integrated, comprehensive approach to furbearer management, wherever and whenever possible.

Impacts to Canada Lynx:

Lynx are the only documented federally listed species to occur on the division. Lynx require boreal forest landscapes supporting a mosaic of differing successional forest stages that contain snowshoe hares and their preferred habitat conditions. Such conditions include dense understories of young trees, shrubs or overhanging boughs that protrude above the snow, and mature multistoried stands with conifer boughs touching the snow surface; winter conditions that provide and maintain deep fluffy snow for extended periods of time; sites for denning that have abundant coarse woody debris, such as downed trees and root wads; and matrix habitat (e.g., hardwood forest, dry forest, non-forest, or other habitat types that do not support snowshoe hares) that occurs between patches of boreal forest in close juxtaposition (at the scale of a lynx home range) such that lynx are likely to travel through such habitat while accessing patches of boreal forest within a home range (USFWS 2013). In Vermont, which is characteristic of landscapes at the southern limit of the species range, habitat is patchy and comprised by smaller patches where lynx occupancy tends to fluctuate in response to limited resource availability, such as during periods of cyclical decline in snowshoe hare abundance. In these landscapes comprised by scattered patches of suitable habitats, lynx may abandon previously occupied home ranges in search of new areas with sufficient resources. Lynx populations are dependent on landscapes containing relatively high snowshoe hare populations. However, snowshoe hare populations are prone to cyclic changes in abundance with years of high snowshoe hare abundance being followed by population crashes that result in years when they are relatively scarce. During these times of low snowshoe hare abundance, lynx may cease reproducing or even abandon areas (USFWS 2013).

The historical record of lynx occurrence in Vermont is scant; however, recent lynx occurrence in Vermont has been documented since 2007, and breeding was first documented in 2010. To date, evidence of lynx reproduction in Vermont has been documented from 2010 to 2013 on the division and adjacent lands (R. Cliche, USFWS, pers. comm.). As demonstrated by recent breeding records at the division, the physical and biological features essential to lynx are present in sufficient quantity and spatial arrangement to support several lynx home ranges, at least temporarily. Based on these sightings and other survey work conducted within the State, the division is thought to have supported Vermont's only known population of breeding lynx. This short period of lynx occupancy has since been followed by several years (2014 to present), in which surveys conducted on the division failed to detect the presence of lynx. Based on these observations, our understanding of lynx and their habitat requirements, and our knowledge of the area, we believe northeastern Vermont, including the division, contains limited resources for lynx. Consequently, we expect lynx may occupy the refuge during cyclic highs in snowshoe hare abundance, but will abandon the area when snowshoe hare abundance declines.

As a furbearer, lynx are susceptible to incidental capture in traps set for other species. In order to minimize the potential for incidental capture or harm, VFWD enacted several regulations effective January 1, 2014 (attached, and located at *http://www.vtfishandwildlife.com/newrules/Hunting_and_trapping/2013_Lynx_Regulation_Annotated.pdf*). These regulations establish a lynx management zone, WMU E, which includes the division, and they establish special regulations related to the placement of traps.

We do not anticipate lynx will be captured in traps placed in the water for furbearers, such as beaver, muskrat, mink, otter, and raccoon, because lynx tend to avoid getting wet. We also anticipate the greatest risk for catching lynx will occur as a result of traps placed in upland locations. To avoid the possibility of incidentally capturing lynx, management of trapping will utilize an adaptive management approach, to include a continuation of an intensive monitoring program and discussions between the refuge, the Service's New England Field Office (NEFO), and VFWD to address the appropriate response should lynx be detected in the future. This is described further in Stipulations Necessary to Ensure Compatibility below. The refuge manager reserves the authority to regulate the numbers of target species taken in any one location, as well as the number of trappers or number of traps per trapper allowed when it is determined that unacceptable resource impacts may occur or are occurring.

Northern Long-eared Bat:

The northern long-eared is listed as federally threatened and State-endangered due to similar white-nose syndrome-related population declines. This is a forest-associated bat that roosts in dead and dying trees. Summer mist-net surveys conducted in nearby Charleston, Vermont captured this species. We anticipate that furbearer management will have no effect on northern long-eared bats, but we will continue to consult with Service endangered species staff with the New England Field Office to ensure there are no negative impacts to this species.

Impacts to other wildlife:

Non-target species could be captured incidentally through this trapping program. Traps will be set specifically within areas of targeted species activity to reduce the risk of taking species other than targeted species. The experience of the trappers, use of species-appropriate techniques, and the selection of the appropriate trap size will reduce non-target captures (Northeast Furbearer Resources Technical Committee 1996, Boggess et al. 1990). The VFWD requires trappers to check traps once daily, unless traps are set in the water (body traps) or under the ice (body and foot traps) for beaver. This decreases the risk of exposure to the elements, predators, and stresses for animals in traps, and increases the success of releasing an uninjured non-target species.

Trappers may temporarily disturb wildlife while driving the division's roads and walking to their trap sets. Disturbances will vary by wildlife species involved and the type, level, frequency, duration, and the time of year activities occur. Disturbance can cause shifts in habitat use, abandonment of habitat, and increased energy demands on affected wildlife (Knight and Cole 1991). Miller et al. (1998) found bird abundance and nesting activities (including nest success) increased as distance from a recreational trail increased in both grassland and forested habitats. In this study, common species (e.g., American robins) were found near trails and rare species (e.g., blackburnian warblers) were found farther from trails. In some cases there is a clear link between the extent of disturbance and either the survival or reproductive success of individuals (e.g., Schulz and Stock 1993), but in many cases disturbance acts in a more subtle way, by reducing access to resources such as food supplies or nesting sites (Gill et al. 1996). Bird flight in response to disturbance can lower reproductive success by exposing individuals and nests to predators. For recreation activities that occur simultaneously (e.g., hiking, biking) there will likely be compounding negative impacts to wildlife (Knight and Cole 1991). However, because of the temporal separation of trapping activities (i.e., fall/winter) and breeding wildlife using the refuge (i.e., spring/summer), disturbance of migratory birds by trappers would be negligible.

Although trapping has some negative effects, it also plays a large role in maintaining sustainable populations and lessens predation effects for certain species of interest. Trapping is used to maintain wildlife population levels that are immune to population crashes, produce the maximum sustained yield, maximize environmental benefits for species of management emphasis, reduce the spread of diseases within a population, or reduce wildlife damage. All of these goals often require furbearer populations to be maintained at a lower level than would otherwise be the case (Conover 2001). With a recent decrease in the price of fur, hunters and trappers have less incentive to pursue furbearers, leading to an increase in their populations. This could cause a decrease in the population of other key species like ground-nesting birds (Batcheller et al. 2000). Adjusting regulated trapping beyond surplus production contributes to a controlled additive mortality which will cause the population to decline. This lessens predation on rare, threatened or endangered species (NEFRTC 2001).

Impacts to aquatic systems:

The topography of the Nulhegan Basin, with its dense stream network, is conducive to beaver activity. Although beaver-influenced wetlands have not been mapped, several are visible from roadways and when viewed from above, a meaningful percentage of the division is covered with open water (staff observations). Naiman et al. (1988) discuss the influence that beaver have over natural systems and the ecological changes that occur as colonization progresses. The alteration of stream channels and the mosaic of habitats created is readily apparent at the division. Such a variety of habitats have great value to the Service's trust resources (e.g., migratory birds) as well as provide more generalized "ecosystem services," such as floodwater retention and enhancing nitrogen availability across the landscape (Naiman et al. 1988). Past records indicate that the beaver harvest is sustainable, and observations by staff of current beaver activity indicate that this species continues to persist in the presence of a regulated trapping program. It is, therefore, believed that continuation of such a trapping program will not adversely affect the division's aquatic systems.

Conflicts with other public uses:

A program of regulated furbearer management on the division as described under this compatibility determination is not expected to conflict with other public uses. Conflicts with public uses are not expected because trapping is generally an inconspicuous activity, traps are usually hidden from view, and they are usually checked in the early morning when other visitation is low. Furthermore, the principal visitors at this time of year are camp leaseholder, hunters, and other trappers, who are long accustomed to this activity. These characteristics serve to limit the potential for encounters between traps or captured animals and those engaged in other public use activities.

Beneficial effects:

Regulated trapping has been documented to provide a variety of ecological benefits including prevention and alleviation of habitat degradation, facilitation of habitat and wildlife restoration, reduction of predation on key species of management concern, protection of rare and endangered species, dampening of disease transmission and severity of disease outbreaks among wildlife and between wildlife and humans, maintaining the integrity of infrastructure, and the conservation and enhancement of biological and genetic diversity (Boggess et al. 1990, Organ et al. 1996).

It is sometimes necessary to reduce the furbearer population to limit damage to infrastructure. Certain furbearers have gradually become more of a liability (NEFRTC 2001). For example, beavers can dam culverts and outlets causing roads to flood following heavy rains and spring snowmelt. This prevents road access and increases the cost to repair damaged roads. Among local municipalities, many adjust trapping regulations in response to furbearer population changes and the public's desires (NEFRTC 2001). Trapping is an effective means to manage and monitor furbearer populations thereby minimizing infrastructure damages.

The eastern coyote is known to be a principal competitor of lynx, sharing a similar prey base (Buskirk et al. 1999, Federal Register Vol. 65(58): 16051-16086). As demonstrated in past trapping records, the removal of approximately three coyotes each year by trapping may increase the availability of prey for lynx and thereby enhance the suitability of the division for lynx.

Regulated trapping is an important means to minimize the transmission of diseases for the benefit of both the wildlife and humans. A healthy population is one that exists within the limits that the habitat can support. If a population exceeds its carrying capacity, factors like starvation or disease can force a re-balancing. Disease in wildlife is often linked to a high population density allowing easier transmission of the disease through contact (Herman 1969). Some furbearer diseases, such as rabies, sarcoptic mange, raccoon roundworms, plague, murine typhus, tularemia, and salmonellosis can also affect humans (Cheng 1973). Trapping can help reduce the local density of furbearers which can decrease the potential spread of disease and contact with humans. Regulated trapping is the most efficient and practical way to regularly maintain furbearer populations at no cost to the public. Regulated trapping will not eradicate diseases, but it may help control the transmission of disease (NEFRTC 2001).

Implementation of a regulated trapping program on the refuge also provides a mechanism to collect information, and possibly contribute to research on furbearer (and other wildlife) occurrence, activity, movement, population status, and ecology. The ecological and monitoring benefits are management services that will be accomplished through minimal or no cost to the government, compared to costs associated with using salaried staff or contractual arrangements with private individuals or organizations, other agencies, or refuge staff. By maintaining a trained and experienced cadre of trappers, the Service can utilize their

skills and local knowledge to perform or assist with valuable management or research functions (Mason 1990). Trappers who participate in the refuge program would provide assistance with the implementation of structured management objectives, such as the alleviation or reduction of wildlife damage conflicts, negative interactions among species, and habitat modifications. Refuge trappers typically have a stake in proper habitat and wildlife conservation and protection of the ecological integrity of the refuge so they can continue trapping. Accordingly, they are valuable assets for the refuge manager in providing on-site reports concerning the fundamental status of habitat, wildlife, and refuge conditions. In fact, trappers who currently participate in the furbearer management program have provided valuable wildlife population status updates and unusual sightings, including lynx use of division habitats. Trappers reported seeing lynx snow tracks within the division before they were confirmed breeding in northeastern Vermont. Trappers have also reported road and property damage caused by storm water and beaver activity, allowing management to address the issue in a timely manner.

Furbearers are considered a renewable natural resource with cultural and economic values (Andelt et al. 1999, Boggess et al. 1990, NEFRTC 1996, Payne 1980). Several human dimensions studies have documented trapper profiles, cultural aspects of trapping, and the socioeconomic role of trapping in the United States (Andelt et al. 1999, Boggess et al. 1990, Daigle et al. 1998, Gentile 1987). A regulated trapping program on the division also fosters the appreciation of the division's wildlife and habitats and provides opportunities for wildlife observation, a greater understanding of ecological relationships, a sense of natural resource stewardship, and continuation of a wildlife-dependent use across generations. Trapping is an activity in which family members and friends often participate jointly and share experiences that broaden the sense of appreciation for natural resources and ecological awareness, and indeed even a sense of community (Glass et al. 1991, Daigle et al. 1998).

PUBLIC REVIEW AND COMMENT:

This compatibility determination was distributed for public comment for 90 days from August 18, 2015 to November 16, 2015 as part of the review of the Silvio O. Conte Refuge's draft CCP/EIS. Comments we received on this use were considered as we developed this final determination. This determination will undergo another 30-day review with release of the final CCP/EIS. A summary of comments received on the draft plan is included in appendix O of the final CCP/EIS.

DETERMINATION (CHECK ONE BELOW):

_____Use is not compatible

__X__Use is compatible, with the following stipulations

Stipulations Necessary to Ensure Compatibility:

The furbearer management program will be reviewed annually to assess its effectiveness and to ensure and that wildlife populations and habitat quality are managed appropriately. In addition to VFWD trapping regulations, the following stipulations and/or conditions will apply (also see SUP, Attachment 1; items 1-11 are conditions of the SUP):

(1) Any person engaging in activities on the Nulhegan Basin Division of the Conte Refuge that would be defined as trapping under Vermont State law must be in possession of a valid Vermont trapping license and a valid refuge SUP and will present such credentials to refuge officials and Federal and State law enforcement agents upon their request. This permit is valid only for trapping conducted on the Refuge during the legal trapping seasons established by the State of Vermont and only for species legal for trapping harvest as defined by the State of Vermont.

(2) In consideration of being permitted to engage in the activity authorized under this permit at the Nulhegan Basin Division of the Conte Refuge, **Permittee**, being of lawful age, for himself and his personal representative, heirs, and next of kin, hereby releases, waives, and forever discharges the United States of America, its agents and employees, all for the purposes herein referred to as, Releasees, from any and every claim, demand, action or right of action, of whatsoever kind or nature, either in law or in equity, arising from or by reason of any bodily injury or personal injuries known or unknown, death and/or property

damage resulting or to result from any injury, which may occur while engaged in the permitted activity, and covenants not to sue the Releasees, for any loss or damages, and any claim or damage therefor, on account of injury to the person or property or resulting in death of the Permittee, whether caused by the negligence of Releasees or otherwise.

(3) Permittee agrees to indemnify, defend, save and hold harmless the Releasees and each of them from any loss, liability, damage or cost Releasees may incur due to the presence of Permittee in or upon the said property of the United States. Releasor agrees that this release and waiver is intended to be as broad and inclusive as permitted by the laws of the State of Vermont and that if any portion thereof is held invalid, it is agreed that the balance shall notwithstanding, continue in full legal force and effect.

(4) Permittee will obey the laws of the United States and Vermont, including those concerning trapping, firearms, motor vehicles, and snowmobiles, while engaged in activities connected with this permit.

(5) Travel by motor vehicle is restricted to established roads, and travel by snowmobile is restricted to the designated Vermont Association of Snowmobile Trails trail system, unless otherwise specifically authorized by separate permit from the wildlife refuge manager.

(6) Use of all-terrain vehicles is prohibited.

(7) Permittee will use every feasible precaution against causing damage to refuge roads, lands, and waters. Permittee will report any damages as soon as possible.

(8) Permittee will not conduct activities in connection with this permit in any manner that would interfere with or cause hazards to vehicular or snowmobile travel, or the activities of refuge visitors.

(9) Permittee shall not litter, or start or use open fires on refuge lands.

(10) Permittee is required to submit a completed Refuge Trapper Report accompanying this permit to the Refuge Manager within 30 days of the close of the Vermont trapping season. Report forms MUST be submitted whether or not any trapping was conducted or any animals were captured. Failure to submit this report will be grounds for denial of a refuge trapping permit for the following season.

(11) Permittee is required to report any sign of lynx (e.g. tracks, scat, animals) to the Refuge Manager within 48 hours of observations.

(12) If future conditions warrant, the Service may regulate the numbers of target species taken in any one location as well as the number of trappers, the number of traps per trapper allowed, or redefine areas subject to trapping as necessary to address resource issues. If we determine such actions are necessary, we would follow the procedures outlined in the Service's Refuge Manual (5 RM 17.11, available at refuge headquarters).

Furthermore, given the uncertainty regarding the continued presence and breeding status of lynx as they relate to our stewardship, additional investigations will occur as part of the division's annual operations. Specifically, in collaboration with Service and VFWD personnel, scientific information regarding the status of lynx on the division will be collected in order to provide an indication of the presence of lynx, areas of use, and potentially whether home ranges have been established and breeding is possible. We will achieve this by employing a combination of the following:

- Continue a systematic survey protocol to detect lynx. This involves dividing those land cover types considered important for lynx into a series of 2km x 2km grid cells. Each cell contains a permanent camera trap site and a 1 km snow track survey transect.
  - Perform snow track surveys at least twice each winter when snow conditions are appropriate.
  - Maintain camera trap sites at least once every four weeks throughout the year to download data, refresh attractants, and ensure the cameras are working properly.
- Pellet count surveys are performed twice annually at 800 locations to assess the relative abundance of snowshoe hares, which may help managers to determine if adequate prey resources to support lynx reproduction are available.

Administratively, we will implement the following measures:

- Continue to maintain a list of trappers with their contact information through the SUP permit process. Should lynx be detected during the trapping season, the refuge will immediately contact the permitted trappers and notify them of necessary responsive actions.

- Beginning in early 2017, the refuge will investigate the appropriate management response to trapping should lynx be detected on the refuge. This will include discussions with NEFO and VFWD. The refuge will finalize a suitable plan that will prevent lynx from being captured prior to the initiation of the upland trapping season in October 2017.

JUSTIFICATION:

We have determined that allowing trapping on the division would not materially interfere with, or detract from the mission of the Refuge System or the purposes for which the refuge was established for the following reasons. First, furbearer populations are stable in Vermont, and since its inception, the furbearer management program has not had any known negative impacts on furbearer populations. Second, at its current and projected low level of use, as well the timing of the use, adverse impacts to wildlife and habitat are expected to be minimal because of the temporal separation of trapping activities (usually fall and winter) and breeding wildlife (usually in spring).

In fact, based on the analysis presented above, we have determined that this use would contribute to the mission of the Refuge System and the purposes for which the refuge was established. Furbearer management through trapping on the division is a useful tool in maintaining balance between furbearers and their habitat. High populations of predators can decrease the survival and nesting success of migratory birds, thus compromising one of the division's central purposes, and by managing coyote populations, may reduce interspecific competition for prey with lynx. Trapping may provide monitoring information that otherwise would be expensive and difficult to obtain using refuge resources; and potentially may contribute to research on furbearer (and other wildlife) occurrence, activity, movement, population status, and ecology. By maintaining a trained, experienced group of trappers, the Service can use their skills and local knowledge to perform or assist in valuable management or research functions. Participating trappers could assist with the implementation of structured management objectives, such as the alleviation or reduction of wildlife damage conflicts, negative interactions among species, and habitat modifications; maintenance of the vigor and health of furbearer populations; and safeguarding the refuge infrastructure critical to habitat management for focal fish and wildlife species, as well as necessary for priority recreational activities. Trapping also helps build appreciation for natural resources, ecological awareness, and support for the Refuge System.

Our determination is based on existing, available information, including our own observations. Should we learn that there are adverse impacts we did not anticipate, either from monitoring the use or from other reliable sources, we will modify the use and the stipulations to avoid or minimize potential adverse impacts as swiftly as possible.

SIGNATURE:

Refuge Manager: _____ _____
(Signature) (Date)

CONCURRENCE:

Regional Chief: _____ _____
(Signature) (Date)

MANDATORY 10-YEAR RE-EVALUATION DATE:

_____

LITERATURE CITED:

Andelt, W.F.,R.L. Phillips, R.H. Schmidt, and R.B. Gill. 1999. Trapping furbearers: an overview of the biological and social issues surrounding a public controversy. Wildlife Society Bulletin 27(1):53-64.

Batcheller, G. R., T.A. Decker, D.A. Hamilton and J.F. Organ. 2000. A vision for the future of furbearer management in the United States. Wild. Soc. Bull. 28 (4):833-840.

Bernier, C. 2012. Personal communication with C. Bernier, Vermont Fish and Wildlife Department.

Boggess, E.K., G.R. Batcheller, R.G. Linscombe, J.W. Greer, M. Novak, S.B. Linhart, D.W. Erickson, A.W. Todd, D.C. Juve, and D.A. Wade. 1990. Traps, trapping, and furbearer management. Wildlife Society Technical Review 90-1, The Wildlife Society, Bethesda, Maryland.

Buskirk, S.W., L.F. Ruggiero, and C.J. Krebs. 1999. Habitat fragmentation and interspecific competition: implications for lynx conservation. USDA Forest Ser. Gen. Tech. Rep. RMRS-GTR-30.

Cheng, T.C. 1973. General parasitology. Academic Press, New York.

Conover, M.R. 2001. Effect of hunting and trapping on wildlife damage. The Wildlife Society Bulletin 29(2):521-532.

Daigle, J.J., R.M. Muth, R.R. Zwick, and R.J. Glass. 1998. Sociocultural dimensions of trapping: a factor analytical study of trappers in six northeastern states. Wildlife Society Bulletin 26:614-625.

US Fish and Wildlife Federal Register. 2013. Endangered and Threatened Wildlife and Plants; Revised Designation of Critical Habitat for the Contiguous U.S. Distinct Population Segment of the Canada Lynx and Revised Distinct Population Segment Boundary. Vol. 78, No. 187, Sept. 26, 2013.

Gentile, J.R. 1987. The evolution of anti-trapping sentiment in the United States: A review and commentary. Wildlife Society Bulletin 15:490-503.

Gill, J.A., W.J. Sutherland, and A.R. Watkinson. 1996. A method to quantify the effects of human disturbance on animal populations. Journal of Applied Ecology 33:786-792.

Glass, R.J., T.A. More, and J.J. DiStefano. 1991. Vermont trappers: characteristics, motivations, and attitudes. Transactions of the Northeast Section of The Wildlife Society 48:134-143.

Herman, C.M. 1969. The impact of disease on wildlife populations. BioScience 19:231-325, 330.

International Association of Fish and Wildlife Agencies (IAFWA). 1998. Best Management Practices for trapping furbearers in the United States. International Association of Fish and Wildlife Agencies, Washington, DC.

Kart, J., R. Regan, S.R. Darling, C. Alexander, K. Cox, M. Ferguson, S. Parren, K. Royar, B. Popp, editors. 2005. Vermonts Wildlife Action Plan. Vermont Fish and Wildlife Department. Waterbury, Vermont.

Knight, R.L., and D.N. Cole. 1991. Effects of recreational activity on wildlife in wildlands. Transactions of the 56th North American Wildlife and Natural Resources Conference pp.238-247.

Mason, D.A. 1990. Vermont's other economy: the economic and socio-cultural values of hunting, fishing, and trapping for rural households. Thesis, University of Vermont, Burlington.

Miller, S.G., R.L. Knight, and C.K. Miller. 1998. Influence of recreational trails on breeding bird communities. Ecological Applications 8:162-169.

Naiman, R.J, C.A. Johnston, and J.C. Kelley. 1988. Alteration of North American streams by beaver. Bioscience. 38:753-762.

Northeast Furbearer Resources Technical Committee. 1996. Trapping and furbearer management: perspectives from the Northeast. 33pp.

Northeast Furbearer Resources Technical Committee. 2015. Trapping and furbearer management in North American wildlife conservation. 5. The Wildlife Society.

Organ, J.F., T. Decker, J. Distefeno, K. Elowe, And P. Rego. 1996. Trapping and furbearer management: Perspectives from the Northeast. Northeast Furbearer Resources Technical Committee, Massachusetts Division of Fish and Wildlife, Division of Federal Aid, Hadley, Massachusetts.

Payne, N.F. 1980. Furbearer management and trapping. Wildlife Society Bulletin 8:345-348.

U.S. Fish and Wildlife Service. March 24, 2000. Federal Register (Volume 65, Number 58) 50 CFR Part 17. Endangered and Threatened Wildlife and Plants; Determination of Threatened Status for the Contiguous U.S. Distinct Population Segment of the Canada Lynx and Related Rule; Final Rule Page 16051-16086.

Vermont Fish and Wildlife Department. 2013. Canada Lynx Regulation Annotated Text. *http://www.vtfishandwildlife.com/UserFiles/Servers/Server_73079/File/Hunt/trapping/2013_Lynx_Regulation_Annotated.pdf* (accessed August 2016).

Attachment 1

United States Department of the Interior

FISH AND WILDLIFE SERVICE

NULHEGAN BASIN DIVISION

Silvio O. Conte National Fish and Wildlife Refuge

5396 Route 105

Brunswick, VT 05905

Phone: 802-962-5240

Fax: 802-962-5006

This Special Use Permit is subject to the following requirements, regulations, and stipulations:

(1) Any person engaging in activities on the Nulhegan Basin Division of the Conte Refuge that would be defined as trapping under Vermont State law must be in possession of a valid Vermont trapping license and a valid refuge SUP and will present such credentials to refuge officials and Federal and State law enforcement agents upon their request. This permit is valid only for trapping conducted on the Refuge during the legal trapping seasons established by the State of Vermont and only for species legal for trapping harvest as defined by the State of Vermont.

(2) In consideration of being permitted to engage in the activity authorized under this permit at the Nulhegan Basin Division of the Conte Refuge, **Permittee**, being of lawful age, for himself and his personal representative, heirs, and next of kin, hereby releases, waives, and forever discharges the United States of America, its agents and employees, all for the purposes herein referred to as, Releasees, from any and every claim, demand, action or right of action, of whatsoever kind or nature, either in law or in equity, arising from or by reason of any bodily injury or personal injuries known or unknown, death and/or property damage resulting or to result from any injury, which may occur while engaged in the permitted activity, and covenants not to sue the Releasees, for any loss or damages, and any claim or damage therefor, on account of injury to the person or property or resulting in death of the Permittee, whether caused by the negligence of Releasees or otherwise.

(3) Permittee agrees to indemnify, defend, save and hold harmless the Releasees and each of them from any loss, liability, damage or cost Releasees may incur due to the presence of Permittee in or upon the said property of the United States. Releasor agrees that this release and waiver is intended to be as broad and inclusive as permitted by the laws of the State of Vermont and that if any portion thereof is held invalid, it is agreed that the balance shall notwithstanding, continue in full legal force and effect.

(4) Permittee will obey the laws of the United States and Vermont, including those concerning trapping, firearms, motor vehicles, and snowmobiles, while engaged in activities connected with this permit.

(5) Travel by motor vehicle is restricted to established roads, and travel by snowmobile is restricted to the designated Vermont Association of Snowmobile Trails trail system, unless otherwise specifically authorized by separate permit from the wildlife refuge manager.

(6) Use of all-terrain vehicles is prohibited.

(7) Permittee will use every feasible precaution against causing damage to refuge roads, lands, and waters. Permittee will report any damages as soon as possible.

(8) Permittee will not conduct activities in connection with this permit in any manner that would interfere with or cause hazards to vehicular or snowmobile travel, or the activities of refuge visitors.

(9) Permittee shall not litter, or start or use open fires on refuge lands.

(10) Permittee is required to submit a completed Refuge Trapper Report accompanying this permit to the Refuge Manager within 30 days of the close of the Vermont trapping season. Report forms MUST be submitted whether or not any trapping was conducted or any animals were captured. NOTE: Failure to submit this report will be grounds for denial of a refuge trapping permit for the following season.

(11) Permittee is required to report any sign of lynx (e.g. tracks, scat, animals) to the Refuge Manager within 48 hours of observations.

Note: Trappers must follow the procedures outlined in Vermont Fish and Wildlife Department's 2013 Canada lynx regulation 4.16. This regulation can be found at: *http://www.vtfishandwildlife.com* **under trapping rules.**

REFUGE TRAPPER REPORT

NULHEGAN BASIN DIVISION

Silvio O. Conte National Fish and Wildlife Refuge

Present data in this report **ONLY** for trapping conducted on **Refuge** lands for trapping season. Submission of this refuge report does not relieve you of your responsibility to submit the Vermont Annual Trappers Report!

Name:_____ **Special Use Permit#:**_____

Place an **X** next to each species you attempted to trap during the trapping season. For each species you attempted to trap, please fill in the number of days trapped, the average number of traps you had set each day, the total number caught, general refuge areas trapped, and the general time period during which you trapped on the refuge for each species. This data **only** applies to your trapping **on the refuge.** Please use the enclosed map when referencing general refuge areas.

X	Species	# of days trapped	Avg # traps set each day	Total number caught	List general **Refuge** areas trapped for this species	When during the season did you trap for this species ***on the Refuge*****?**
	Mink					
	Raccoon					
	Muskrat					
	Skunk					
	Opossum					
	Weasel					
	Coyote					
	Red fox					
	Gray fox					

X	Species	# of days trapped	Avg # traps set each day	Total number caught	List general **Refuge** areas trapped for this species	When during the season did you trap for this species ***on the Refuge*****?**
	Bobcat					
	Fisher					
	Otter					
	Beaver					

Did you observe any sign of lynx (e.g. tracks, scat, animals) while trapping on refuge lands? If so, please specify where on the refuge these observations were made and dates of observations.

_____

_____

_____

_____

Did you experience captures of furbearers subject to closed seasons or non-furbearers? If so, please list by species, number, and type of trap and set in which the capture(s) occurred.

_____

_____

_____

_____

_____

_____

_____

**** OVER PLEASE ****

REFUGE TRAPPER REPORT (Continued)

Your knowledge, field experience, and observations on the refuge are important to us! Based on your **refuge trapping experiences** during this season, please provide any comments on the general areas you trapped, unusual wildlife sightings, your perception of abundance or scarcity of furbearers, evidence of predation, new beaver ponds, or other wildlife, habitat conditions, weather or factors related to trapping effort or success, or any other information that may be useful for our understanding of refuge conditions and the status of wildlife, fish, or habitat on the refuge:

Please provide any suggestions for improving the refuge furbearer management program below:

_____

_____

_____

_____

_____

_____

_____

_____

_____

Thank you for your cooperation in completing and submitting this report!

Submit completed report within 30 days of the close of trapping season to:

Refuge Biologist
Nulhegan Basin Division
Silvio O. Conte National Fish and Wildlife Refuge
5396 Route 105
Brunswick, VT 05905
802-962-5240

Attachment 2

Vermont Fish and Wildlife Trapping Regulations
Enacted with January 2014 Season

2013 Canada Lynx Regulation

ANNOTATED TEXT

4.16 Lynx

(a) This subsection shall be effective on January 1, 2014.

(b) Any person who incidentally captures a lynx shall notify the Department immediately.

(c) The following regulations on traps and trapping shall only apply within the Wildlife Management Unit E.

(1) Foothold traps set on land must be anchored using a chain or cable no longer than 18" that is center-mounted to the trap using a swivel connection and must have at least one in-line swivel along the chain or cable.

(2) From the fourth Saturday in October to December 31, both dates inclusive, all body gripping traps must be set:

i. In the water, or;

ii. Within a Canada lynx exclusion device as described below and as depicted in Diagram 1:

a. the trap jaws shall be completely within the device;

b. the trap springs may extend outside of device through openings no larger than 7.5" wide by 1.5" high;

c. the device shall not have an opening greater than 6" by 8";

d. the opening shall not be directly in front of the trap but shall instead be either on the top or side of the device;

e. the trap set within the device shall be a minimum of 18" from the closest edge of the opening to the trap;

f. there shall be at least two attachment points for each side of the device where there is a joint or where panels come together;

g. the device shall be constructed of wood or of wire mesh of 16 gauge or less wire (.05" diameter wire or greater) and having a mesh size with openings no greater than 1.5" X 1.5" or 1" X 2"; and,

h. the trap shall be anchored outside of the device; or

iii. Off the ground as described below and as depicted in Diagram 2:

a. at least 5' above the ground or if snow is on the ground at least 5 feet above snow level with the exception of the 24-hour period immediately following a snowstorm;

b. affixed to a standing tree which is free of branches below the trap or to a leaning section of pole that has not been planed or otherwise altered except for the removal of branches and is less than 4" in diameter at the trap and is angled at least 45° along its entire length from the ground to the trap; and

c. in an area that is free of any object within 4' of the trap.

(3) From the fourth Saturday in October to December 31, both dates inclusive, body gripping traps no larger than a typical 160 (inside jaw spread up to 6.5") may also be set on the ground if placed:

i. Under overhanging stream banks, or;

ii. In blind sets without the aid of bait, lure or visual attractants, or;

iii. Within a cubby constructed of artificial materials with the trap inserted at least 7" from the front and with an opening no greater than 50 square inches as depicted in Diagram 3.

(d) The establishment of a ten-year "Lynx Study Period" shall commence on the effective date of this subsection. The Department will assess the status of lynx in Vermont, identify and evaluate additional techniques and devices for avoiding incidental capture of lynx, and develop revisions to these rules in accordance with the findings of such studies and all current information. The rules set forth in this subsection 4.16 shall expire on January 1, 2024 unless such rules are either extended or amended by the Fish and Wildlife Board. The decision to extend or amend these rules shall be based on an evaluation of the following key criteria:

(1) Reliable evidence of the presence or absence of a resident, breeding population of Canada lynx;

(2) The availability of more effective and/or practical alternatives for avoiding the incidental capture of lynx; and

(3) The outcome of Maine's Incidental Take Permit application process.

Diagram 1. Canada lynx exclusion device for body gripping traps.

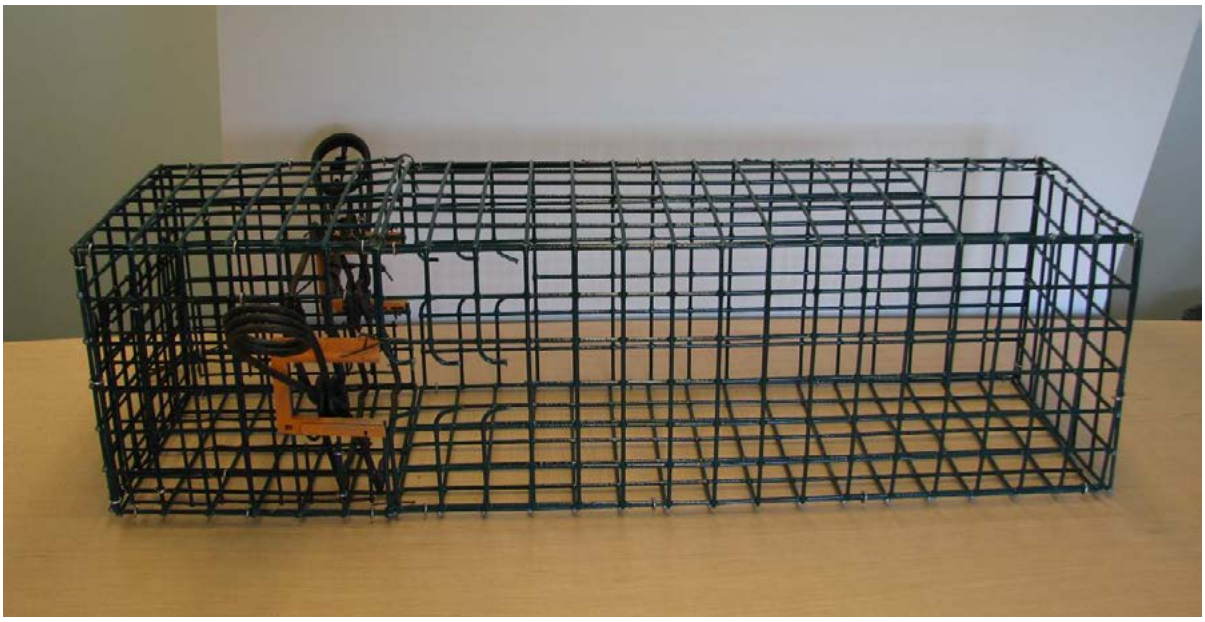

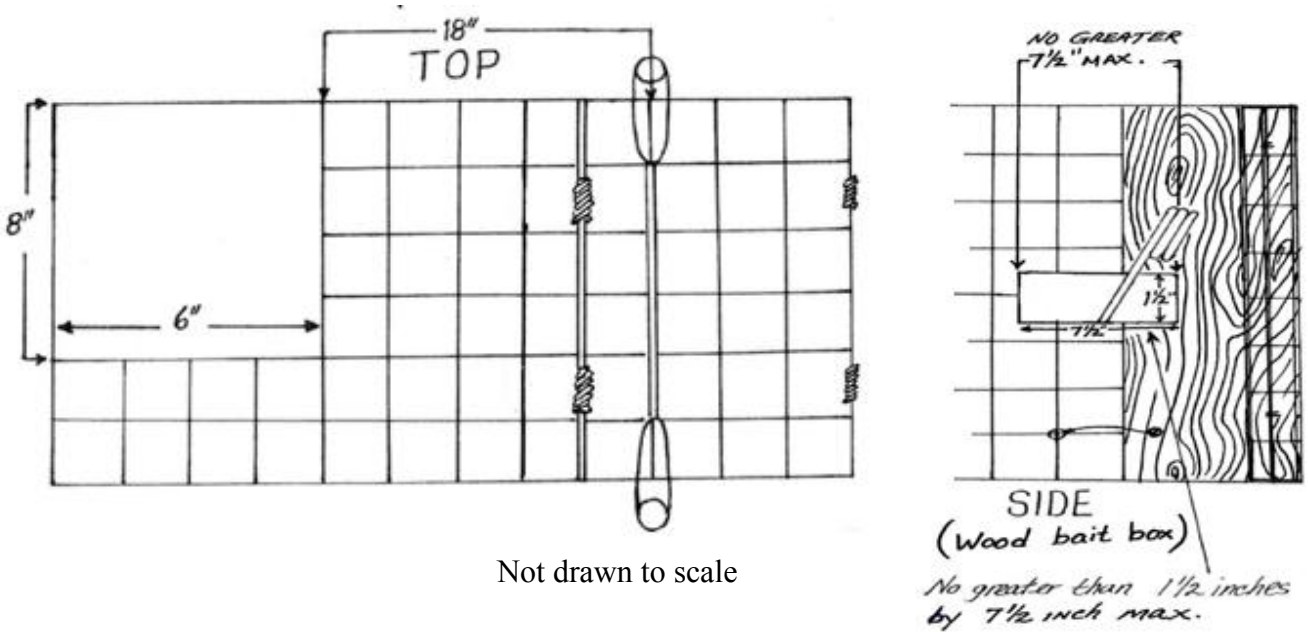

Not drawn to scale

Diagram 2. Off the ground sets for body gripping traps.

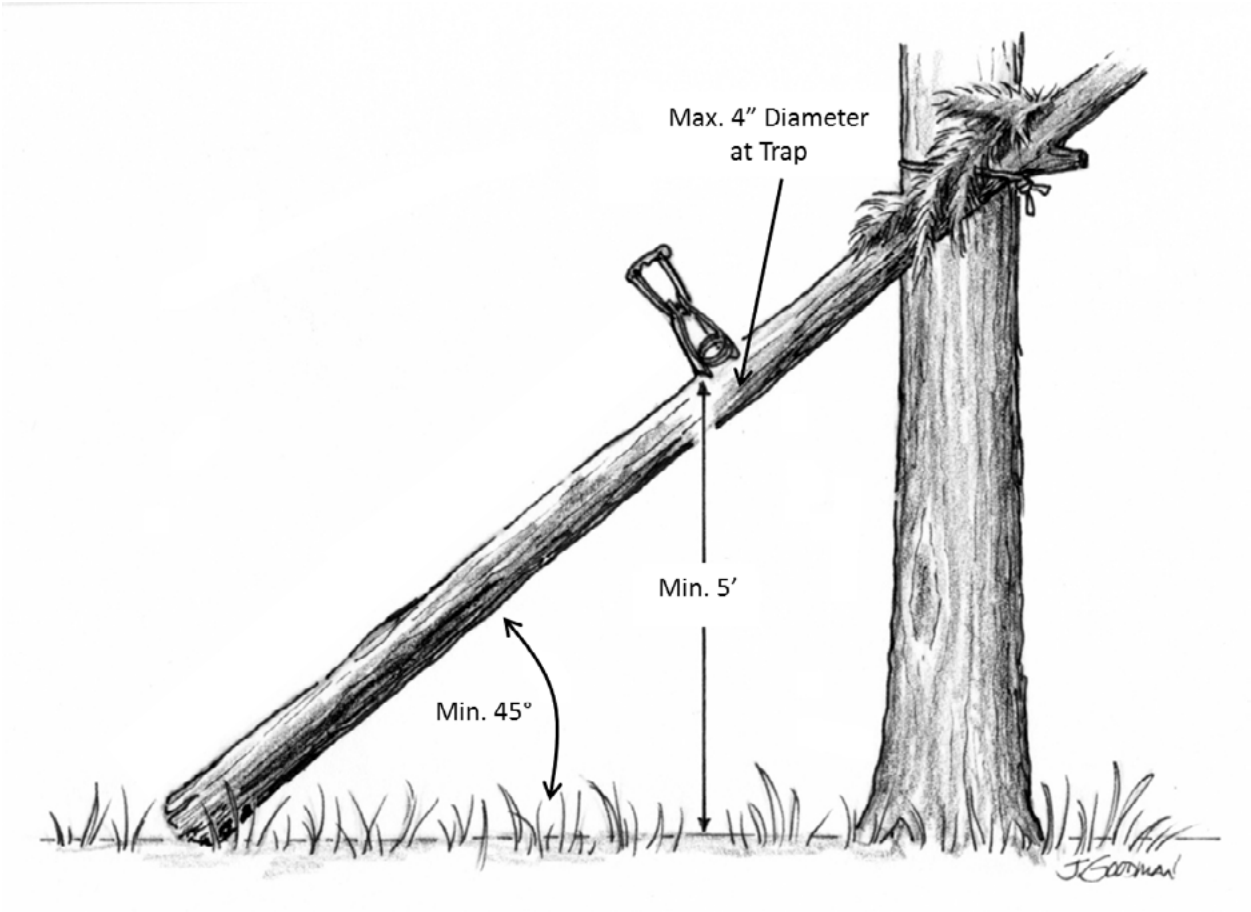

Diagram 3. Cubby sets for body gripping traps no larger than a typical 160.

Opening not to exceed 50 square inches

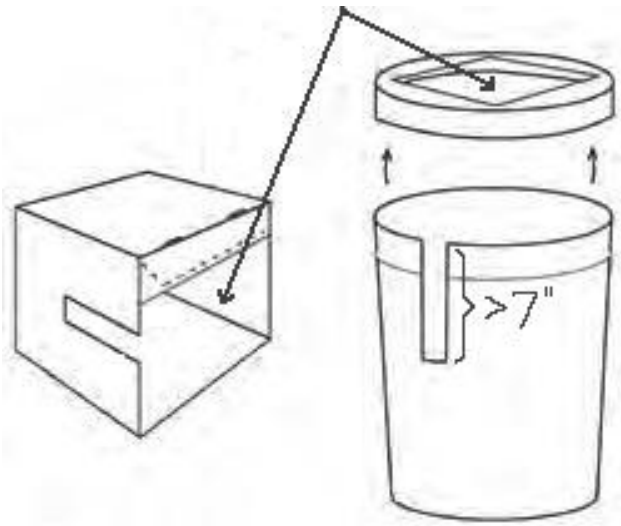

COMPATIBILITY DETERMINATION

USE:

Hunting on Silvio O. Conte Refuge Lands in Vermont

REFUGE NAME:

Silvio O. Conte National Fish and Wildlife Refuge (Conte Refuge)

DATE ESTABLISHED:

October 3, 1997

ESTABLISHING AND ACQUISITION AUTHORITY(IES):

- Silvio O. Conte National Fish and Wildlife Refuge Act (Public Law 102-212).
- Migratory Bird Conservation Act of 1929.
- Land and Water Conservation Fund Act of 1965.

REFUGE PURPOSE(S):

- To conserve, protect, and enhance the Connecticut River populations of Atlantic salmon, American shad, river herring, shortnose sturgeon, bald eagles, peregrine falcons, osprey, black ducks, and other native species of plants, fish, and wildlife.
- To conserve, protect, and enhance the natural diversity and abundance of plant, fish and wildlife species, and the ecosystem upon which these species depend within the refuge.
- To protect species, listed as endangered or threatened, or identified as candidates for listing, pursuant to the Endangered Species Act of 1973 (ESA) as amended (16 U.S. 1531 et seq.).
- To restore and maintain the chemical, physical, and biological integrity of wetland and other waters within the refuge.
- To fulfill the international treaty obligations of the United States relating to fish and wildlife and wetlands.
- To provide opportunities for scientific research, environmental education, and fish and wildlife oriented recreation and access to the extent compatible with the other purposes stated in this section.

NATIONAL WILDLIFE REFUGE SYSTEM MISSION:

To administer a national network of lands and waters for the conservation, management, and where appropriate, restoration of the fish, wildlife, and plant resources and their habitats within the United States for the benefit of present and future generations of Americans.

DESCRIPTION OF USE:

(a) What is the use? Is the use a priority public use?
The hunting of big game, small game, furbearers, and migratory birds on refuge lands in Vermont, including the existing Nulhegan Basin Division and Putney Mountain Unit. Both of these were officially opened to hunting during the 2013-14 season, when a Hunt Plan, Compatibility Determination, and Environmental Assessment were finalized. This compatibility determination updates information and analysis for these lands; Nulhegan Basin Division had previously been opened to hunting under a 1999 pre-acquisition compatibility determination.

Hunting was identified as one of six priority public uses by Executive Order 12996 (March 25, 1996), and legislatively mandated by the National Wildlife Refuge System Administration Act of 1966, as amended by the National Wildlife Refuge System Improvement Act of 1997 (Public Law 105-57).

(b) Where would the use be conducted?
Hunting will occur on the Nulhegan Basin Division (division) located in Ferdinand, Lewis, Brunswick, and Bloomfield, Essex County (Fig. 1), and the Putney Mountain Unit (unit) in Brookline and Putney, Windham County (Fig. 2). After completing the U.S. Fish and Wildlife Service's administrative procedures, additional lands acquired at the division from willing sellers will be open to hunting consistent with the regulations of the State of Vermont. It is the intent of the refuge to allow hunting at new refuge divisions when sufficient and suitable land, capable of supporting a quality and safe hunter experience, is acquired from willing sellers.

The division consists of 26,605 acres of high quality black spruce-tamarack, spruce-fir, and northern hardwood forests, free-flowing rivers, and bogs. The unit contains 285 acres of hardwood forest and scattered beaver wetlands. These habitats support small and large mammals all year round, and neotropical migratory birds during the nesting season and during spring and fall migrations.

(c) When would the use be conducted?
Refuge property will be open to hunting during the seasons and times set by the State of Vermont with the exceptions described below in "Stipulations Necessary to Ensure Compatibility." For most species, the daily hunting period will begin one-half hour before sunrise and end one-half hour after sunset. Migratory game bird hunting begins at one-half hour before sunrise and closes at sunset. A special use permit (SUP) is required for refuge use outside of regular refuge hours (one-half hour before sunrise and one-half hour after sunset).

(d) How would the use be conducted?
All refuge lands will be open to the hunting of big game (white-tailed deer, moose, black bear, and wild turkey), upland game (coyote, fox, raccoon, bobcat, woodchuck, red squirrel, eastern gray squirrel, porcupine, skunk, snowshoe hare, eastern cottontail, and ruffed grouse), and migratory birds (ducks, geese, crows, and American woodcock) as defined by the State of Vermont. Hunting will conform to State seasons and in accordance with State of Vermont, Federal, and refuge-specific regulations to include archery, firearms, muzzleloader, and dog training seasons.

Access will be in the form of motor vehicles operating on roads open to the public, snowmobiles operating on designated snowmobile trails, and pedestrian access (walking/hiking and snowshoeing). In addition, the use of draft horses to recover downed moose, a supporting activity, would be allowed by SUP.

Areas may be closed if there are unacceptable resource impacts such as soil erosion, repeated disturbance to susceptible wildlife, or irresolvable conflicts with other compatible priority public uses. The need for site closures will be considered by the refuge manager on a case-by-case basis.

The hunting program will be reviewed annually or as needed, in consultation with the Vermont Fish and Wildlife Department (VFWD) to assess its effectiveness and to insure that wildlife populations and habitat quality are managed appropriately. In addition, refuge-specific regulations listed below under "Stipulations Necessary to Ensure Compatibility" will apply.

(e) Why is this use being proposed?
Hunting is one of the priority uses outlined by Congress in the Refuge Improvement Act of 1997. The Service supports and encourages priority uses on national wildlife refuge lands where appropriate and compatible. Hunting is used in some instances to manage wildlife populations. Hunting is also a traditional form of wildlife-oriented recreation that can be accommodated on many National Wildlife Refuge System (Refuge System) lands. There also is a strong hunting heritage in Vermont and in the areas covered in this document.

As previously discussed, the Nulhegan Basin Division and Putney Mountain Unit have been open to hunting under Service ownership. Hunting would continue on these lands and newly established divisions in the state if sufficient land is acquired.

AVAILABILITY OF RESOURCES:

There are sufficient funds within the refuge's annual operating budget to administer these hunts. All hunts will be administered in accordance with existing federal and State regulations. The refuge shares a federal wildlife officer with Umbagog National Wildlife Refuge, and this officer will conduct enforcement patrols on refuge properties in the State. Additional law enforcement staff, as described in the refuge's Comprehensive Conservation Plan (CCP), will eventually be necessary as new divisions are established.

Projected costs to fund the hunting program are estimated below.

Annual Costs	
Document Preparation and Review	$600
Supplies/Brochures/Sign Maintenance	$500
State Consultation	$500
Processing SUPs/Monitoring Resource Impacts	$600
SUP compliance	$2,700
Law Enforcement/Responding to the Public	$4,200
Total Annual Costs	**$9,100**

The estimated annual costs listed above are primarily salary costs and do not reflect efforts coordinated with VFWD (e.g., law enforcement). Monitoring public use and providing law enforcement are required to properly administer public use programs; therefore, these operations are accounted for in budget and staffing projections.

ANTICIPATED IMPACTS OF THE USE:

Hunting can result in positive or negative impacts to the wildlife resource. A positive effect of allowing hunter access to the refuge will be a better appreciation and understanding of the wildlife and habitats associated with northern New England ecosystems. This can translate into more widespread and stronger support for the refuge, the Refuge System and the Service. The typical range of impacts are addressed in greater detail in the Environmental Assessment of Public Hunting on Refuge Lands in Vermont (U.S. Fish and Wildlife Service 2012).

Effects on Air and Water Quality

Air quality and water quality impacts will be minimal and limited to automobile and snowmobile emissions on open roads and trails and subsequent surface runoff. These effects will not only come from hunters but also from other users engaged in wildlife-dependent recreation. The effects of hunting-related activities, as well as other management actions on overall air and water quality in the region will be negligible, compared to the effects from industrial centers and non-refuge vehicle traffic.

Effects on Vegetation

The physical effects on vegetation from hunting are expected to be minimal because hunters tend to travel on existing roads and game trails. Some dispersed hiking/snowshoeing is anticipated, but it will generally be dispersed over large areas.

Positive effects on the vegetation may result by maintaining white-tailed deer and moose populations at levels in sync with the carrying capacity of available habitat. The impacts of dense deer populations on forest regeneration and the composition and diversity of the herbaceous understory have been well documented (Tierson et al. 1966; Behrend et al. 1970; Tilghman 1989). Opening the refuge to deer hunting will at least maintain the habitat as it is now, prevent degradation due to overbrowsing, and promote successful natural regeneration and a more sustainable plant community. Well-managed hunting can effectively control deer and produce dramatic changes in the forest vegetation (Behrend et al. 1970). The impact of deer hunting on the

vegetation will be positive and result in better regeneration of forest canopy species and an increase in the diversity of the herbaceous understory. With regard to moose, this positive change has been observed at the division concurrent with a recent decline in the moose population.

Possible negative cumulative impacts of recreational hunting include temporary trampling of vegetation and light soil erosion. Spring turkey season could cause some trampling effects to growing plants, especially in wet areas; however, we do not expect these impacts to be substantial, because turkey hunter density is expected to be low and dispersed. Most hunting occurs during the fall, but hunters tend to disperse when in the woods; as a result, we do not anticipate substantial impacts to habitats. Some hunt seasons extend into winter when the ground is either frozen, covered in snow, and/or when plants are dormant. Hunters would have little impact on plants during this period. For these reasons, cumulative impacts to plant communities and soils are not likely to be significant during either the fall or spring hunting seasons.

Effects on Soils

It is anticipated that minor impacts to soils will occur as a result of allowing hunting access on the refuge. Soils can be compacted and erode as a result of repeated foot traffic, especially those soils associated with wetland habitats. Erosion potential will likely vary during the season based on soil moisture and temperatures. During much of the hunting season, soils may be frozen or covered in snow, thereby reducing the impacts greatly. At the anticipated use levels, and because hunters tend to disperse when searching for game, impacts to soils (erosion and compaction) are not likely to be significant.

Effects on Hydrology

Hydrology impacts from hunting would be minimal and only result from the use of roads and trails. Unsurfaced trails are susceptible to a variety of impacts including vegetation loss and compositional changes, soil compaction, erosion, and muddiness, exposure of plant roots, trail widening, and the proliferation of visitor-created side trails (in Marion and Leung 2001). However, these effects are considered minimal due to the fact that hunters are generally dispersed, which reduces repeated erosive actions on soils. Also, hunters will not be permitted to use vehicles off designated refuge roads, although some dust, drift, or runoff may land in streams when hunters are travelling on designated roads near or crossing streams. In addition, soils are generally frozen during the latter portion of the hunting season thus reducing the potential for erosion and downstream sedimentation.

Effects on Other Visitors

Conflicts between hunters and other refuge visitors can occur, particularly where there is concentrated use by both groups. The refuge has not experienced such conflicts in any measurable amount but recognizes this potential. Because hunting is generally a long-standing use-common on the surrounding landscape, and is dispersed across a large landscape, it is anticipated that there would be negligible impacts to those individuals participating in fishing, wildlife observation and photography, environmental education, and wildlife interpretation. The refuge will, if circumstances warrant, modify public access such that conflicts are avoided (e.g., restricted hunting zones, enhanced outreach).

Effects on Wildlife-Game Species

Hunting is not expected to have adverse effects on game species because of the hunting regulations set by Federal and State agencies. Hunting is an important tool for wildlife managers to control populations of game species that might otherwise exceed habitat carrying capacity and threaten the well-being of other wildlife and, in some instances, that of human health and safety (USFWS 2010). The Service has ultimate responsibility for regulating migratory bird (e.g., ducks, geese, American woodcock) hunting Nationwide based on Federal law established by international treaties with Canada, Mexico, and other countries with whom we share migratory birds. The Service establishes the frameworks that govern all migratory bird hunting in the United States through a public process each year. Within the bounds of the frameworks, state wildlife agencies have the flexibility to determine season length, bag limits, and areas open to hunting.

Each state has primary authority over hunting of wildlife that reside within state boundaries (e.g., deer, moose, ruffed grouse, turkey) (USFWS 2010). In Vermont, the VFWD manages game based on geographically defined

Wildlife Management Units (WMU). This allows VFWD to manage game populations across a diverse State at acceptable levels.

The scale of management for both migratory birds and resident game is typically much larger than refuge-administered lands. The Atlantic Flyway, is the basis for managing migratory birds found in Vermont. This Flyway includes states along the Eastern Seaboard, Puerto Rico, U.S. Virgin Islands, and in Canada, Nunuvut, and the Maritime Provinces (USFWS 2008). For resident game, Vermont uses WMUs as the basis for population management. WMUs are at a scale that allows VFWD to efficiently and effectively manage game populations. As an example, WMU E1 contains the entire towns of Norton, Canaan, Lemington, Averill, Lewis, Warners Grant, Warren Gore, Avery's Gore, as well as, most of Bloomfield and portions of Brunswick, Ferdinand, Brighton, Morgan and Holland. In comparison, the Nulhegan Basin Division comprises about 26,605 acres in the towns of Lewis, Bloomfield, Brunswick, and Ferdinand. Hunting on refuge-administered lands is not at a scale that will affect populations of resident or migratory game species.

Hunting invariably results in the removal of individual animals from populations. However, the goal of wildlife managers is to maintain populations at levels that are within the habitat carrying capacity and socially acceptable, while providing a sustainable harvest for hunters. Hunting on refuge-administered property provides opportunities for a priority public use while contributing to the overall management of species, whether at the Flyway or State levels.

Big Game

White-tailed Deer: The regulated hunting of deer in accordance with State regulations would facilitate ecological balance between refuge lands and the surrounding lands. Regulated hunting would not compromise the persistence of the species on refuge and surrounding lands. Through regulated hunting, deer populations are maintained in accordance with the available habitat. High deer densities have been shown to negatively impact plant and animal communities. Therefore, a hunting program would facilitate ecological diversity through mitigating the effects of high deer densities. Furthermore, deer wintering areas are critical to the survival of the species in northern climates. Thus, managing deer populations with a regulated hunting program would temper browsing pressure on deer wintering areas and limit declines in deer populations as a result of excessive winter browsing pressure that is out of sync with the maintenance of sustainable and quality deer wintering habitat.

The VFWD Big Game Plan (Vermont Fish and Wildlife Department 2009) establishes deer density objectives for both the Northeast and Eastern Foothill regions of between 10 to 15 deer per square mile. These densities, if maintained through regulated hunting, will sustain the native vegetation and forest regeneration associated with the natural communities in those regions. Regulated deer hunting prescribed to achieve the above density objectives also maintains a deer herd in good physical condition that staves off malnutrition and disease.

The VFWD actively monitors deer herd size and physical condition through the collection of harvest numbers and biological parameters at check stations staffed by wildlife biologists during select hunting season periods. This data is critical in providing the biological data needed to properly manage a deer herd in balance with its carrying capacity.

Hunting will not detrimentally affect deer populations on the refuge, as attested by the long history of regulated hunting in the State. Conservation Focus Areas (CFAs) and existing divisions only comprise a portion of a WMU. Habitat vacated by harvested deer would likely be occupied by other deer within a relatively short time. Hunting on the refuge in accordance with State regulations would contribute to the State's population objectives in the applicable WMU, which are designed to keep deer populations within carrying capacities.

Hunting other game species (e.g., moose, black bear, small game) will have a transient effect on deer. When hunters move through occupied habitat, the deer can be expected to flush and move away from the disturbance. Because hunting pressure is not expected to be high (Mark Maghini, personal observations at Nulhegan Basin), disturbed deer have other areas available, either on or off the refuge, to move away from hunters. Encounters will cause physiological stress and use of energy to avoid hunters, the same as encounters with any other refuge visitor.

Moose: Historically common in Vermont, moose have returned with reforestation of the State during the late 20th Century. It was estimated that only a few dozen moose occupied Essex County in the 1960s. As numbers increased, a permit hunting program was begun in 1993 in WMU E (Essex County). This has since been expanded to other WMUs where moose population goals provide for a sustainable harvest. By 1997, nearly 2,100 moose existed in Vermont, with nearly a quarter of the population in WMU E. By 2008 the moose population was estimated in excess of 1,500 in WMU E (VFWD 2009). During the 2011 hunting season, a total of 92 moose were harvested in WMU E during both the newly instated archery only season and the regular moose season (VFWD 2012). The goal for moose management in WMU E is roughly a population of 1,000 moose (1.75 per square mile) (VFWD 2009).

The highest moose densities in Vermont currently occur in WMU subunit E1, which is 247 square miles in size and includes the entire division. Nearly 1,600 moose were harvested in this sub-unit from the 1993 through 2011 moose hunting seasons. From 2004 through 2011, 111 of these moose were taken from the division alone. The average moose harvest during this period was 0.35 moose/square mile, and in two of these years the harvest density equaled or exceeded 0.5 moose/square mile.

The high moose densities and consequently high harvest rates for sub-unit E1, including the division, combined with the high proportion of undeveloped land open to public access, make this region the most desirable unit to hunt moose for many Vermont hunters. Hunter success rates averaged 71.4 percent in E1 from 2004 through 2011. Permit numbers for E1 reached a peak of 300 in 2008 and 2009 when VFWD was trying to reduce the moose density below biological carrying capacity. This goal was achieved and with the current density estimate of 1.75 moose/square mile, permits have been reduced to 70 for this sub-unit. Since the onset of modern moose seasons in Vermont in 1993, only one moose was harvested in the town of Putney.

Vermont's regular moose hunting season is open for one week beginning on the third Saturday in October. Beginning in 2012 and continuing for the foreseeable future, the moose harvest in subunit E1 is expected to stabilize at around 45 moose annually. In addition, Vermont instituted a special archery-only moose season in 2011, with 50 permits issued Statewide. This 7-day season begins October 1, and permit holders select their desired WMU. Many of the moose archery hunters have selected subunit E1 (27 in 2011 and 17 in 2012), and 7 and 5 E1 moose were taken by archers in 2011 and 2012, respectively. The majority of moose harvested by archers are bulls and consequently the archery take has negligible effect on population dynamics. For this reason, and because regular season permits are expected to remain stable, no measurable changes are anticipated in the moose population on the division in the near future due to hunting. Hunting of moose as stated in the proposed action should have no adverse cumulative effects on their local, regional, or global populations. Furthermore, the VFWD has proposed a realignment of the existing WMUs that will effectively eliminate the likelihood that moose hunting permits will be made available for WMU O, which includes the Putney Mountain Unit. An additional positive impact of moose hunting is to minimize negative effects of browsing on forest regeneration.

Black Bear: The black bear is cherished by hunters as a valuable game species for both its meat and pelt. Since 1995, the black bear population has doubled to approximately 5,000 individuals and bears now occupy 80 percent of the State (VFWD 2009). Approximately 500 bears are harvested annually by licensed hunters in the State with substantial numbers of them being taken in the two management units that contain the Nulhegan Basin Division (WMU E) and Putney Mountain Unit (WMU O2). People hunt for many different reasons, but over 90 percent of hunters who were surveyed listed the reason they hunt for black bear was "for food." (Duda et al. 2007).

Black bears are the State's largest predator and have few natural enemies. The VFWD uses regulated hunting as a means of controlling population growth while monitoring the population to ensure that the legal harvest is sustainable. Vermont's black bear plan, 2010–2020 calls for a statewide bear population objective of between 4,500 and 6,000 bears (VFWD 2009). Hunting is a critical tool in maintaining this population objective. Management objectives also revolve around maintaining wild, free-ranging, viable populations of black bear as well as the conservation of large blocks of habitat. There are currently 25 laws and regulations that regulate the harvest, utilization, and sale of bears in Vermont. Black bear season is currently set on a Statewide basis with no regulatory differences among WMUs. The season length is one of the longest in the nation, extending from September 1 to the Wednesday following the opening day of the November deer rifle season. Use of trained hunting dogs to hunt bears is allowed via state issued permit. The bag limit is currently set at one bear per licensed hunter per season. In a 2007 survey of Vermont hunters, 17 percent of all hunters had hunted black bears within the past 5 years (Duda 2007).

Although considered a valuable game species, black bears annually cause extensive agricultural and property damage and are capable of inflicting injuries to humans. Most human injuries have involved bears that had lost their fear of humans. Hunting is used not only as a tool for controlling the population but also as a means of keeping bears wary of humans. A liberal hunting season and the use of trained dogs for hunting are believed to enhance this behavior modification of bears. This reduces the number of bears that might become "nuisance animals," causing damage to livestock or farmers' crops, raiding dumpsters, or entering buildings in search of food. Hunting plays an important role in shaping Vermont's cultural carrying capacity for bears.

Wild Turkey: In the late 1960s the VFWD reintroduced wild turkeys to the State. Only 40 years after the reintroduction, turkeys now range throughout the entire State and have successfully exploited Vermont's mosaic of forestland and dairy farms. Wild turkeys have thrived in Vermont and public participation in turkey hunting has continued to increase. During the past 7 years, 5,200 to 6,900 birds have been harvested annually in a sustainable manner by 15,500 to 17,800 hunters. Turkeys have become a valuable game species in the State and roughly 400 are harvested annually in the WMUs encompassing refuge lands.

The overall goal of wild turkey management in Vermont is to manage the State's wild turkeys to sustain healthy, abundant populations that will provide hunting and viewing opportunities that will satisfy social expectations and tolerances for turkeys. This management goal aims to sustain an abundant wild turkey population that is truly wild and that is below both the biological carrying capacity of its habitat and the cultural carrying capacity desired by the public. Populations of turkeys that exceed the biological carrying capacity of their habitat can be decimated by diseases (including Avian Pox that can spread to other bird species) and are capable of degrading their habitat. Populations that are allowed to exceed the cultural carrying capacity can cause extensive agricultural damage. U.S. Department of Agriculture Wildlife Services reports that many farms within the Connecticut River valley already sustain damage from wild turkeys to their stored silage and corn crops. Regulated hunting plays an important role in limiting agricultural damage from turkeys.

Small Game Species

The small game species most pursued on the division include ruffed grouse and snowshoe hare. Limited habitat for eastern cottontail rabbits and gray squirrels restrict hunting interest and hunting pressure on these species and refuge lands. The unit's habitat provides for small game populations of ruffed grouse, gray squirrel, and eastern cottontail rabbits.

All of the small game species present on the refuge are r-strategist species, demonstrating high productivity and mortality rates, with population densities often tied to the quality of available habitat. Most of the small game species' populations are positively influenced by increasing percentages of younger forest age classes that provide the mix of cover and foods for these animals. In particular, Essex County within which the division lands occur has 24 percent of its forestland in small diameter and 20 percent in medium diameter size classes (U.S. Department of Agriculture 2011). Consequently, this area has more early successional forestland than any other region of Vermont. This provides a significant high quality habitat foundation to support higher densities of these species. Even so, population fluctuations can be driven by weather, changes in predator populations, and annual fluctuations in food supplies.

Ruffed grouse: Ruffed grouse are the most pursued small game species in Vermont. The 2007 hunter survey estimated ruffed grouse were the fourth most popular game species in Vermont with 16 percent of hunters pursuing them within the last 5 years (Duda 2007). While Vermont's ruffed grouse season runs Statewide from the last Saturday in September to December 31, ruffed grouse hunters hunted this species only a median of 6 days per season. Participation trends showed October is the most popular month for grouse hunting with greatly reduced participation in December. Vermont's ruffed grouse hunting activity is not considered high enough to negatively influence the natural fluctuations that this species experiences from the other population limiting factors described above (S. Darling pers. comm.).

Snowshoe hare and Eastern Cottontail: Vermont's rabbit season, which includes both snowshoe hare and eastern cottontail rabbits, runs Statewide from the last Saturday in September through the second Sunday in March. An extension of the season to March 31 was instituted in WMUs D1, D2, and E in 2012. The season extension was granted for this and neighboring WMUs because of the superior snowshoe hare habitat conditions in those regions. In particular, the quantity of young forest is especially large in these WMUs (USDA 2011). This represents excellent habitat conditions that should nearly optimize cover and food conditions

for snowshoe hare. For this reason, the extended season length would not negatively influence hare densities. This season extension does not apply to the Putney Mountain Unit. Approximately 12 percent of Vermont hunters have pursued rabbits according to the most recent hunter survey (Duda 2007).

Gray squirrel: Gray squirrel populations are considered cyclic in nature, fluctuating widely with mast production and periodic spikes in population that result in significant emigrations. Hunting mortality is compensatory and generally not considered a factor in controlling squirrel populations (Edwards et al. 2003). The Vermont gray squirrel season occurs Statewide from September 1 through December 31. Duda (2007) indicated that approximately only 7 percent of Vermont hunters had pursued gray squirrels within the preceding 5 years. This low participation rate, coupled with the cyclical nature of squirrel populations indicates that hunting levels on the refuge are too low to negatively impact populations. Gray squirrel populations are present on the Putney Mountain Unit and the more mature forestland of red oaks and beech offer suitable fall food supplies that can provide for higher, more sustainable densities of gray squirrels.

Migratory Birds

Migratory birds are managed on a flyway basis and hunting regulations are established in each state based on flyway data. Atlantic Flyway and State of Vermont regulations would apply. The total numbers of birds in the flyway is reduced as a result of hunting on refuge lands, but would certainly be within allowable limits as determined by State and Federal agencies. Disturbance to non-target birds and resident wildlife would likely occur from hunting and associated hunter activity, but would be short-term and temporary. Waterfowl hunter activity is light (estimated at fewer than 20 visits per year) due to a lack of accessible waterfowl habitat and therefore has little impact on nontarget species, habitats, or other refuge visitors. Effects of woodcock hunting are similar to those of ruffed grouse (above).

Furbearing Species

The hunting of furbearers in Vermont is a long standing tradition. Furbearer hunting in Vermont is highly regulated and is restricted to raccoon, coyote, fox, muskrat and bobcat. Populations of these species are monitored annually via the close examination of certain indices such as harvest numbers, sex/age ratios, catch per unit effort and pelt sales (VFWD 2012). Although much of this information is gathered from trapping records, all data indicate healthy and sustainable populations of these species under current harvest regimes, including hunting. Furthermore, the analysis of annual harvest records allows furbearer resource managers to not only foresee potential issues for these species and to react accordingly, but also to revise harvest regulations as necessary in order to ensure viable populations into the future.

Because the furbearer hunting seasons are largely set at a time of year when pelts are prime and of highest value, the harvest of furbearers during the regulated hunting seasons provides citizens an opportunity to utilize these sustainable, renewable fur resources. Several of these furbearing species are commonly viewed as nuisance animals as a result of their feeding behavior, which can conflict with the interests of humans. State statute allows landowners to resolve nuisance furbearer issues on their property, including by lethal means. This annually results in the taking of furbearers by unregulated and unmonitored means and contributes to the waste of an otherwise valuable fur resource because these animals are commonly taken out of season when their pelts are of limited value. Although nuisance furbearer activity is limited on refuge lands, the regulated hunting of furbearers on the refuge may contribute to the reduction of nuisance wildlife activity occurring on adjacent lands and, therefore, help to minimize the waste of this sustainable resource.

Coyote: The coyote is distributed Statewide and is considered abundant (VFWD 2012). The coyote population will likely remain relatively constant unless a higher-order predator becomes reestablished.

Some members of the public have a desire to control or eliminate coyote populations, based on their presumption that coyotes are limiting deer populations. However, hunting and trapping has little to no effect in determining Statewide coyote population levels. A Maine study found that there would need to be mortality rates greater than 70 percent in order to reduce the coyote population (Jakubas 1999).

During the past 20 years, the annual coyote harvest has ranged between 600 and 800 animals, although effort has varied widely. No measurable changes are anticipated in the coyote population on the refuge lands in the near future due to hunting. Hunting of coyotes as stated in the proposed action should have no adverse cumulative effects on their local, regional or global populations.

Distemper, sarcoptic mange, and rabies are common diseases sometimes found in coyote populations at higher densities. Maintaining the currently stable coyote population with hunting can aid in stemming the spread of disease. Additional potential positive impacts of hunting coyotes would be a localized, temporary reduction in coyote numbers, which may alleviate the effects of nest depredation by coyotes on resident and migratory birds, as well as predation on white-tailed deer and potentially neighboring livestock.

Red Fox: Red fox populations are distributed Statewide and considered to be abundant and stable (VFWD 2012). Historical records indicate that their population has had continuous growth since the early 1800s as agriculture and logging began to create red fox habitat.

Red fox are hunted, but most take of this species in Vermont is from trapping. Harvests across the State of Vermont have increased over the previous decade. No measurable changes are anticipated in the red fox population on refuge lands in the near future due to hunting. Hunting of red fox as stated in the proposed action should have no adverse cumulative effects on their local, regional or global populations.

Distemper, sarcoptic mange, and rabies are common diseases sometimes found in red fox. Hunting of red fox may aid in stemming the spread of disease (Sterner and Smith 2006). The ability to control and/or maintain their population through hunting can reduce the risk of diseases spreading to other species. Additional potential positive impacts of hunting red fox would be a temporary, localized reduction in fox numbers, which may alleviate the effects of nest depredation by foxes on resident and migratory birds.

Raccoon: Given the division's boreal climate, raccoon are rare and any hunting take is low and perhaps unlikely. Raccoon are more common in southern Vermont, and hence more likely to be pursued at the Putney Mountain Unit. Following State regulations based on data indicating at least stable populations, the Service concludes that it is highly unlikely that the harvest of this species will have any direct significant impact to local or regional populations.

The raccoon population is stable and healthy, and any harvest on refuge lands has been and is expected to remain small, and therefore have no effect on the Statewide population (VFWD 2012).

Bobcat: The bobcat is a trapped and hunted species that is distributed Statewide. Hunting accounts for roughly one-third of the annual harvest. The overall harvest has increased during the past decade, from approximately 74 per year during the first half of the decade to 89 annually in the second 5 years.

No measurable changes are anticipated in the bobcat population on refuge lands in the near future due to hunting. Hunting of bobcats as stated in the proposed action should have no adverse cumulative effects on their local, regional, or global populations.

Miscellaneous Game Species

Porcupine, Skunk, and Woodchuck: Hunting for porcupine, skunk, and woodchuck in Vermont is most often incidental to hunting other species. Some wildlife species compensate for decreased number (harvest) by increasing reproductive output. Davis et al. (1964), found that removal of large numbers of woodchucks from a population resulted in a decrease of other mortality factors on the population, increased birth rate, and increases in immigration. Thus, the population size remained stable even though three times as many woodchucks were removed from the treatment as from the control area. The populations of striped skunk, porcupine, and woodchuck are stable and healthy, and the harvest on refuge lands is expected to be very small, and primarily an incidental harvest while hunting other species (VFWD 2012).

Endangered, Threatened, and other Non-game species

Anticipated direct, indirect, and cumulative impacts to the refuge's endangered species, threatened species, and non-game species are described below. The Service's New England Field Office will review this action as part of an intra-Service Section 7 consultation under the ESA (16 U.S.C. 1536). Concurrence with a determination of "may affect, not likely to adversely affect" is anticipated.

Canada lynx

Canada lynx are the sole federally listed species to occur on the division. The historic record of Canada lynx occurrence in Vermont is scant; there are only five records of lynx from the period 1797 to 1968, and there is no historical evidence of a breeding population (Kart et al. 2005). Recent lynx occurrence in Vermont has been documented since 2006, and breeding was first documented in 2009. To date, evidence of lynx reproduction in Vermont (corroborated via the genetic testing of biological matter collected during winter track surveys) has been documented in 2009, 2011, and 2012; all instances at the division (R. Cliche, USFWS, pers. comm.). Based on these sightings and other survey work conducted within the State, the division is thought to support Vermont's only known population of breeding lynx.

Lynx require boreal forest landscapes supporting a mosaic of differing successional forest stages that contain snowshoe hares and their preferred habitat conditions. Such conditions include dense understories of young trees, shrubs or overhanging boughs that protrude above the snow, and mature multistoried stands with conifer boughs touching the snow surface; winter conditions that provide and maintain deep fluffy snow for extended periods of time; sites for denning that have abundant coarse woody debris, such as downed trees and root wads; and matrix habitat (e.g., hardwood forest, dry forest, non-forest, or other habitat types that do not support snowshoe hares) that occurs between patches of boreal forest in close juxtaposition (at the scale of a lynx home range) such that lynx are likely to travel through such habitat while accessing patches of boreal forest within a home range (Federal Register 2013).

Canada lynx populations are dependent on landscapes containing relatively high snowshoe hare populations. However, snowshoe hare populations are prone to cyclic changes in abundance with years of high snowshoe hare abundance being followed by population crashes that result in years when they are relatively scarce. During these times of low snowshoe hare abundance, Canada lynx may cease reproducing or even abandon areas (Federal Register 2013).

As demonstrated by recent breeding records in northern Vermont, the physical and biological features essential to lynx are present in sufficient quantity and spatial arrangement to support several lynx home ranges, at least temporarily. However, because Vermont is located at the species' southern range limit, it remains uncertain whether the area contains the features in adequate quantity and spatial arrangement to support a persistent population. Based on their recent arrival and lack of historic information, we expect the lynx population at the division to be ephemeral.

The greatest concerns involve the hunting of bobcat with hounds and the presence of bear hounds, bobcat hounds, and beagles during the annual training season that begins June 1; lesser concerns involve potential pursuit by bear hounds beginning with the September 1 general bear hunting season. Hunting bobcat with hounds is of concern because it is assumed that dogs cannot discriminate between bobcat and lynx scent. The concern is alleviated somewhat by the likely presence of snow and the ability of hunters to discern between the species' tracks during the January-February bobcat season and recall their dogs. However, the potential exists for take to occur if the dogs mistakenly pursue a lynx. In order to address this concern, potential impacts will be addressed by maintaining a contact list of those participating in dog training and hunting with bobcat and bear pursuit hounds on the refuge–providing us a means to share outreach materials and pertinent new information and alerts relating to lynx and their habitat as they arise. The refuge will continue to advise hunters of the presence of lynx and will work with VFWD in providing outreach materials and special considerations to follow while hunting in lynx habitat. The VFWD already provides a bobcat/Canada lynx comparison guide in their annual hunting digest.

The hunting of coyote with pursuit hounds is of lesser concern–very few coyote hunters employ hounds and for those who do, winter is the preferred season when deep snow conditions provide an advantage to the hounds (C. Bernier, VFWD, pers. comm.). As with bobcat hunting, the ability to discern tracks in snow enables the hunters to release their dogs on the target species, to monitor the pursuit, and to recall their dogs if they give chase to a non-target animal. Because lynx breed in March and April, it is conceivable that a breeding pair could be disturbed by a coyote pursuit hound. However, lynx possess a distinct advantage in traversing snow and are therefore not expected to suffer any noticeable harm. As with the use of other pursuit hounds, we will maintain a contact list of those hunting coyotes with hounds in order to share information that can help minimize potential conflicts with lynx.

Hunting with beagles is of little concern as a direct impact to lynx; by the time of the late-September snowshoe hare hunting season, Canada lynx kittens are expected to be mobile and capable of evading beagles. In addition, beagles are generally not trained to remain with treed game (animals that seek refuge from pursuit by fleeing up a tree) and are expected to leave any Canada lynx soon after they seek refuge in a tree. We expect these events to be rare and of short duration, and not result in harm or harassment to an extent that take is anticipated. While the hunting of hares targets a primary prey item of lynx, the abundance of snowshoe hare habitat on the division and the fact that hare hunting has occurred at what appear to be stable levels of effort preceding and following the first observations of lynx, it is believed that hare populations are adequate to support breeding lynx and kittens.

With regard to the dog training season beginning June 1, no data exist that assess impacts of hounds on lynx, however lynx biology, behavior, and observations regarding the training of bear hounds, bobcat hounds, and beagles suggest that there may be some conflicts. The life history of lynx presents a number of factors that indicate the use of hounds during spring and early summer may expose lynx to incidental take. Lynx in the southern portion of their range breed in March and April with parturition occurring in late May to early June. Their altricial kittens are typically born in dens comprised of tip-up mounds created by blown down trees within areas of dense vegetation. Kittens remain in the den until they are approximately 5 weeks of age. While kittens are in the den, the female lynx typically restricts her travels so as to remain in close proximity to the den while making periodic visits to feed and care for the young. Kittens typically remain with the mother through the first 9 months, departing when the next breeding season approaches. During this time, kittens are dependent on their mothers while they develop their own hunting skills. Again, the potential for incidental take would be addressed by maintaining a contact list of individuals engaged in dog training on the refuge, thereby allowing for the sharing of species identification traits, life history information, and a means for rapid communication of key information, such as the discovery of a den site. Additional conservation measures to avoid take of lynx would be derived by studying lynx usage patterns. Our discussion on impacts to lynx is based on existing information. As we further monitor lynx activities on the division, and better understand hound usage levels and potential impacts, the administration of dog training will be subject to further refinement.

Northeastern bulrush

The federally endangered northeastern bulrush is the only federally listed or proposed species known to occur on the unit. It is a wetland-dependent plant. Recent surveys have failed to document its presence; no above-ground growth was observed possibly due to persistent dry conditions (B. Popp, VFWD, pers. comm.). Little is known about the habitat requirements for this species, but it appears to have adapted to fluctuating water levels (USFWS 2006). In addition, populations have been known to return to an area once hydrological conditions improve (B. Popp, VFWD, pers. comm.). It is not expected that hunting would have any greater effect on this species than that of people walking across the unit for other purposes; trampling is perhaps a potential effect, but given its wetland habitat, such instances would be extremely rare. Hunting as proposed was found to not effect Northeastern bulrush in the intra-Service Section 7 consultation on the 2012 hunt opening package.

Spruce Grouse

Spruce grouse is the only State-listed endangered bird species found on the division. In fact, Vermont's only viable breeding population of spruce grouse is mainly located on the division. In this region, their preferred habitat is multi-structured lowland areas dominated by spruce, balsam fir, and tamarack. Their diet is dependent on the availability of needles from these preferred tree species; especially in the fall and winter when other food sources, such as blueberries and insects, are not available (Alexander et al. 1993).

Some overlap exists between ruffed grouse and spruce grouse range on the division. The potential for a ruffed grouse hunter to mistakenly shoot a spruce grouse exists and could potentially interfere with recovery efforts. However, outreach in the form of true-color, informative signs depicting the difference between the two species placed in key locations on the division as well as a column in the annual VFWD hunting digest and frequent news releases appears to be mitigating the potential for inadvertent loss. Based on spring breeding surveys conducted by VFWD, spruce grouse numbers in the Nulhegan Basin (including the adjacent Wenlock WMA) appear to be governed more by habitat quality and distribution than by incidental hunting mortality (J. Buck, pers. comm.).

Little Brown Bat

The little brown bat was State-listed as endangered in 2011 as a result of the devastating disease white-nose syndrome. Statewide populations have declined an estimated 90 percent or more as a result of the disease. The little brown bat hibernates in caves and mines and the females migrate to summer maternity colonies located in buildings and, less often, dead or dying trees. Summer mist-net surveys conducted in nearby Charleston (Nulhegan Basin Division) and Townsend (Putney Mountain Unit) captured this species.

Northern Long-eared Bat

The northern long-eared is listed as federally threatened and State-endangered due to similar white-nose syndrome-related population declines. This is a forest-associated bat that roosts in dead and dying trees. Summer mist-net surveys conducted in nearby Charleston (Nulhegan Basin Division) and Townsend (Putney Mountain Unit) captured this species. We anticipate that hunting will have no effect on northern long-eared bats, but we will continue to consult with Service endangered species staff with the New England Field Office to ensure there are no negative impacts to this species.

Small-footed bat

The small-footed bat is listed as State-threatened due to its low abundance throughout the State. The bat hibernates in caves and mines during the winter, but is documented to roost in cliffs and ledges during the summer maternity colony season. Recent mist-net surveys in Townsend (near Putney Mountain Unit) documented the species in the vicinity of the unit.

Consultation with VFWD, as the relevant regulatory agency, has determined that the three State-listed bat species and spruce grouse will not be negatively impacted by a public hunting program (S. Darling, pers. comm.).

With regard to other non-game species, the maintenance of herbivore populations at sustainable densities will promote a forest vegetative community with successful regeneration and a robust understory, thereby fostering a balanced faunal community. The overall species diversity of the refuge is not expected to be diminished by this hunting alternative.

Disturbance to non-hunted migratory birds would likely be minimal at the regional, local, and flyway scale. Regional and flyway effects will not be applicable to species that do not migrate such as most woodpeckers, and some songbirds such as cardinals, titmice, wrens, chickadees, etc. Disturbance by hunting to non-hunted migratory birds is not expected to have detectable cumulative negative impacts because most hunting seasons do not coincide with the nesting season. Long-term future impacts that could occur if reproduction was reduced by hunting are not relevant for this reason. Disturbance to the daily wintering activities, such as feeding and resting, of birds may occur. Disturbance to birds by hunters is probably commensurate with that caused by non-consumptive users.

The remaining concern is related to disturbance of ground nesting songbirds during the dog training season beginning June 1, in addition to grouse species and woodcock. Unless the dogs are directly destroying nests or causing mortality of adults, which is unlikely, the birds would probably acclimate to this level of disturbance without abandoning nests or having other major impacts. Therefore, this type of activity probably impacts some birds, but an insignificant and perhaps immeasurable number. It is anticipated that dog training would result in short-term and sporadic wildlife responses such as temporary flushing of ground nesting birds, perching birds, and mammals (R. Dettmers, USFWS, pers. comm.). Additional affects may include the minor trampling of vegetation, introduction of pathogens in feces (Sime 1999), and occasionally direct harm to wildlife by a young, inexperienced dog.

Cumulatively, hunter disturbance to non-hunted resident wildlife may be slightly negative; however, such an impact is unlikely because of the timing of the hunt. The hunts will occur during a time of the year when small mammals, reptiles, amphibians, and invertebrates are inactive and thus the likelihood of hunter interaction is rare. Any isolated encounters with small mammals, reptiles, amphibians, and invertebrates should not have cumulative negative effects on populations.

User Conflict

Given the well-established tradition of hunting on these refuge lands, conflicts with other recreational users are not anticipated due to the season of the year, traditional uses of the lands and general culture of the area, and precautions outlined in the existing Refuge Public Hunt Plan (USFWS 2013). All recreational users have equal access to refuge lands and the various user groups have historically coexisted. Furthermore, hunting is the predominant public use during the fall and hunters are highly dispersed across the refuge landscape. In an effort to limit potential interactions with the non-hunting public, additional precautions involving general ingress and egress via gravel roads were outlined in the following "Stipulations Necessary to Ensure Compatibility" section.

The overall impacts of this use were fully reviewed and discussed in the "Environmental Assessment, Public Hunting on Silvio O. Conte Refuge lands in Vermont" (USFWS 2012). Please refer to this document for a full discussion of direct, indirect and cumulative impacts for this use.

Effects of Dogs/Dog Training

There is an increasing amount of research on the effects of domestic and feral dogs on wildlife (Miller et al. 2001, Young et al. 2011). Nature based human recreation is becoming increasingly popular in North America (Lenth et al. 2008) and can have a wide range of effects on wildlife, from altering the physical environment, to the response of the species themselves (Steidl and Powell 2006). The response of a species to a disturbance caused by recreation can range from short-term behavioral responses to long-term demographic responses. How much an activity affects wildlife will vary with length, regularity, amount, position, and timing of the activity as well as the species itself (Steidl and Powell 2006, Stevens et al. 2011). Within each species, changes in response may result from differences in individual characteristics such as: age, sex, size, physical condition, reproductive status, and habitat characteristics such as: season, abundance of alternative habitat, and an area's disturbance history (Stevens et al. 2011).

Domestic dogs often accompany outdoor recreationalists, both on a leash and off, and can have a variety of effects on wildlife. While some of the following species are not found on the refuge, the behavioral effects of dogs on endemic wildlife can be expected to be similar. The effects include increased heart rate and flushing distance of bighorn sheep (MacArthur et al. 1982), increased flush distance of golden plovers (Yalden and Yalden 1990) and marmots (Mainini et al. 1993), increased alert and flush distance of mule deer (Miller et al. 2001), and decreased mule deer, squirrel, rabbit, chipmunk, mouse, and bobcat activity near trails (Lenth et al. 2011) when compared to a pedestrian traveling without a dog. However, some species such as red foxes, woodlarks, and robins do not increase their activity or flushing distance in response to dogs (Miller et al. 2001, Mallord et al. 2007, Lenth et al. 2011). Miller et al. (2001) hypothesized that the difference in response of birds and mammals is an outcome of the differences in the perception of potential predators such that birds may have a reduced response to dogs alone because they are not traditional predators whereas domestic dogs resemble coyotes and foxes, which are natural predators of mammals. In addition, Lenth et al. (2011) suggested that wildlife may adjust their temporal activity patterns to co-exist with high levels of human recreation and dogs.

However, the previously mentioned studies, which constitute the preponderance of dog-wildlife impact research, only address the influence of dogs on designated trails such as those found in urban and suburban parks where dogs are confined to a delineated travel corridor. Training of hunting dogs on the division occurs in a densely forested landscape with few designated hiking trails. Therefore, it is highly unlikely that hunting dogs would travel the same ground twice and the inferences made from the previously mentioned studies to the effects of hunting dogs on wildlife may have only limited relevance. The limited studies available regarding the effects of hunting hounds on non-target wildlife found that white-tailed deer and wild turkey may be displaced from their home ranges only to return the next day or sooner (Sweeney et al. 1971, Lowry and McArthur 1978, Reed and Guynn Jr. 1990). In addition, studies investigating the effects of bear hounds on bears found that adult bears were displaced from their home ranges and returned the next day unharmed, and that cubs climbed trees to escape dogs and were unharmed (Allen 1984, Massopust and Anderson 1984, Elowe 1990).

Effects of bear hounds

The training of bear hounds is currently known to occur only at the Nulhegan Basin Division. Based on average home range sizes that can range from 16 to 68 square miles for females and males, respectively (Alt et al.

1980), the division can support several adult black bears and cubs. As reported by houndsmen, it is also likely that bear density on the division is greatest during spring and early summer given that bears tend to favor agricultural lands in the Connecticut River valley later in summer and into fall.

In the typical course of an outing, a houndsman will slowly drive the division's roads with several dogs riding in the rear of a pickup truck, attempting to pick up the scent of a bear. When the dogs pick up the scent, they are released to begin the pursuit and the houndsman follows their progress by sound (barking) and by use of a tracking collar. The hunt can cover many miles and last hours, with the bears potentially traveling off the division or bears running onto the division from surrounding private lands. The pursuit ends when the bear is treed, the hounds lose the scent, or the hounds tire of the chase.

We do not have estimates for the number of handlers using the division, but can assume that at most two or three handlers may be on the division at one time. This would equate to 12 to 18 dogs within a division encompassing more than 26,000 acres. As a result, bear hound training is likely well dispersed over the division with negligible concentrated use, which would result in very low levels of vegetation disturbance and only incidental disturbance to wildlife. Likewise, the active hunting of bears with pursuit hounds beginning with the September 1 annual season is also widely dispersed. Although the extent of such hunting has not been quantified, handlers have described a generally low level of effort on the division given the relatively greater use of agricultural areas by bears during the fall hunting season. The effects of hunting with bear hounds is expected to be no different than those anticipated during the training season with the exception of a greatly reduced source of disturbance to migratory birds given that most such birds would have departed.

Effects of bobcat pursuit hounds

The Nulhegan Basin Division represents the most likely current refuge land base where the training of bobcat pursuit hounds could occur. Bobcats occur on the division, but no assessment has been undertaken to determine their abundance, habitat quality, or prey availability. Statewide, the 10-year average annual harvest is 27 bobcats via hunting, which accounts for roughly one-third of the total annual harvest (VFWD 2012). Based on staff observations, it is not believed that the training of bobcat pursuit hounds is a common occurrence, although the activity would follow many of the same mechanics described for bear hounds above. Given the presumed low intensity of the activity, as well as, its dispersion across a large land base, it is believed that such activity would result in very low levels of vegetation disturbance and only incidental disturbance to wildlife.

Hunting bobcat with pursuit hounds could result in conflicts with Canada lynx given the presumed inability of a hound to distinguish between the two species based on scent. Potential impacts and suggested avoidance and conservation measures intended to avoid take of lynx are presented above in the section involving effects to lynx.

Effects of coyote pursuit hounds

Although this use has not been documented by staff and is certainly not a common use, the potential exists at the division given its setting. While the division possesses characteristics that would support its desirability for hunting coyotes with pursuit hounds: relatively high coyote population, land open to hunting, and an extensive and lightly trafficked land base (C. Bernier, VFWD, pers. comm.), accessibility after December 15 is limited to snowmobiles (provided adequate snow cover exists), which may prove infeasible for transporting and managing multiple hounds. It is presumed that coyote hunters using hounds are dependent on identifying fresh sign and therefore are most likely to choose a season with snow on the ground (Willette 2011). The hounds pursue the coyote until it tires and they are able to surround it, allowing the hunter to approach for a shot. Aside from an incidental chase, effects to non-target individuals are expected to be minimal because the hunter can monitor the pursuit and recall the hounds if they strike on a species other than coyote. Given the presumed infrequency of the activity, as well as, its dispersion across a large land base, it is believed that such activity would result in only incidental disturbance to wildlife and very low levels of vegetation disturbance.

Effects of beagles (snowshoe hare)

Snowshoe hare prefer young stands of spruce-fir forest for foraging and predator escape, and therefore beagle training would be concentrated in relatively few areas on the division. Unlike bear hound training, beagle training is confined to the dense spruce-fir areas because hare do not range as widely as black bear and stay

within the dense vegetation for its forage and predator escape cover. The June 1 start of the training season coincides with the early portion of the songbird nesting season, which is one of the division's principal biological values. However, canids are not a common predator of the majority of songbirds which perch and nest in the branches of trees high off the ground. Therefore, the presence of dogs in the area is not likely to adversely affect the behavior of these songbird species. However, the regular activity of beagles within fairly discrete areas may cause a flushing response in ground-nesting songbirds, as well as, spruce grouse, a State-listed species whose habitat overlaps with snowshoe hare. The effects of this flushing response may be minimized given that it is a natural defense behavior against predators such as coyote, red fox, fisher, bobcat, and weasel. Consequently, flushing from hunting dogs may not be considered an unnatural behavior for spruce grouse and other ground-nesting birds, and therefore of lesser concern. Although greater than with bear hounds because of its concentrated occurrence, the potential for vegetation disturbance is not anticipated to be significant.

As with hunting with other pursuit hound breeds, the effects of hunting with beagles is expected to be no different than those anticipated during the training season with the exception of a greatly reduced source of disturbance to migratory birds given that most such birds would have departed by the late September hare season.

Effects of bird dogs

The June 1 start of the training season coincides with the early to mid-point of nesting season for ground nesting songbirds and game birds such as woodcock and ruffed grouse. By this time, many chicks would have hatched and some would have fledged. Therefore, the presence of dogs and the training routine, which would otherwise most likely cause birds to flush from their nests or otherwise disturb them, is of modest concern. Also, while damage to nests has not been documented, the potential for any such effects by bird dogs is negated. Ground nesting birds have a variety of potential natural predators including coyotes, red foxes, fisher, and weasels and flushing/temporary displacement is a natural response of birds to avoid predators. Based on observations by staff, this type of training is infrequent; likely fewer than four outings per month. Therefore, any flushing caused by hunting dogs is a rare occurrence and may be viewed as a natural response, not one caused specifically by dog training. Just as with other forms of dog training, there is some potential for vegetation disturbance; however, any such impact is expected to be immeasurable.

The hunting of grouse and woodcock with dogs is a popular activity, particularly at the division. Incidental flushing of resident bird species is expected, although the effects are anticipated to be minimal given that this is a natural defense behavior to mammalian predators. The potential for vegetation disturbance is not anticipated to be significant.

Summary of wildlife effects

Potential impacts to Canada lynx are the greatest wildlife-related concern; this is heightened with the training of wide-ranging pursuit hounds during the lynx denning period. Such potential impacts will be addressed by maintaining a contact list of those participating in dog training and hunting with bobcat and bear pursuit hounds on the refuge–providing a means to increase awareness of lynx and their habitats and a way of contacting users should new information arise. Additional avoidance and conservation measures intended to avoid take would be derived by studying lynx usage patterns. Our discussion on impacts to lynx is based on existing information. As we further monitor lynx activities on the refuge, and better understand hound usage levels and impacts, the administration of dog training will be subject to further refinement.

The remaining concern is related to disturbance of ground nesting songbirds, in addition to grouse species and woodcock. Unless the dogs are directly destroying nests or causing mortality of adults, which is unlikely, the birds would probably acclimate to this level of disturbance without abandoning nests or having other major impacts. Therefore, this type of activity probably impacts some birds, but an insignificant and perhaps immeasurable number. It is anticipated that allowing dog training would result in short-term and sporadic wildlife responses such as temporary flushing of ground nesting birds, perching birds, and mammals but that these would not have a negative impact overall on resident wildlife or migratory birds or the habitats they occupy. (R. Dettmers, USFWS, pers. comm.). Additional affects may include the minor trampling of vegetation, introduction of pathogens in feces (Sime 1999), and occasionally direct harm to wildlife by a young, inexperienced dog.

PUBLIC REVIEW AND COMMENT:

This compatibility determination was distributed for public comment for 90 days from August 18, 2015 to November 16, 2015 as part of the review of the Silvio O. Conte Refuge's draft CCP/EIS. Comments we received on this use were considered as we developed this final determination. This determination will undergo another 30-day review with release of the final CCP/EIS. A summary of comments received on the draft plan is included in appendix O of the final CCP/EIS.

DETERMINATION (CHECK ONE BELOW):

____ Use is not compatible

__X__ Use is compatible, with the following stipulations

STIPULATIONS NECESSARY TO ENSURE COMPATIBILITY:

The hunt program would be managed in accordance with Federal and State regulations. The hunting program would be reviewed annually to ensure management goals are achieved to ensure the program is providing a safe and high-quality hunting experience for participants.

During the hunting season, we will provide a law enforcement presence to ensure safety and compliance and post a notice at public entrances and trailheads reminding users that the hunting season is open and recommend wearing "hunter" orange.

In addition to VFWD regulations the following stipulations will apply:

(1) Shooting across, over, or within 10 feet of the traveled portion of any gravel road contemporaneously open to motor vehicle travel is prohibited in the interest of public safety (50 CFR 25.71 and 32.2 (l)).

(2) We allow only temporary tree stands and you must remove them (see 50 CFR 27.93) by the end of the final deer season. Your name and address must be clearly visible on the tree stand. We prohibit nails, screws, or screw-in climbing pegs to build or access a stand (See 50 CFR 32.2(i)).

(3) You must remove all blinds, decoys, shell casings, and other personal equipment and refuse from the refuge at the end of each day (see 50 CFR 27.93 and 27.94).

(4) We allow the use of retrieving, flushing, pointing, and pursuit dogs, however dogs must be under control as is reasonable and customary for that activity, such as voice command and/or remote telemetry (see 50 CFR 26.21).

(5) In order to monitor and mitigate potential disturbances to wildlife and neighboring land owners, any nighttime hunting (e.g., raccoon, coyote) will require a SUP issued by the wildlife refuge manager.

(6) We prohibit the use of all-terrain vehicles (ATV's or off road vehicles).

- We maintain a safe hunt by establishing safety/no hunt zones around refuge residences, buildings, and high-use public use trails, as necessary.
- Hunting outside of regular refuge hours requires a SUP.
- Provide visitors with general information on the hunting program and refuge-specific and State regulations through the refuge website, information signs, and a hunting brochure.
- In all materials related to the hunting program, promote and encourage the use of lead-free ammunition.
- Work with the State to identify and evaluate the impacts associated with requiring the use of non-toxic ammunition for hunting on refuge lands.

In order to protect Canada lynx during any potential interactions with hounds:

- The refuge and/or VFWD will maintain a contact list of those individuals training and/or hunting with pursuit hounds (bobcat, bear, coyote) on the refuge, as well as those training beagles.

  - Such list will provide an opportunity to share information regarding the identification of lynx and their sign and proper conduct when lynx are present (e.g., leashing and removing hounds from the area) as well as a means to contact users immediately should critical information become available (e.g., the discovery of a lynx den).

Given the uncertainty regarding the continued presence and breeding status of lynx at the Nulhegan Basin Division and the need to communicate lynx-related information with users, additional investigations will occur as part of the division's annual operations. Specifically, in collaboration with Service and VFWD personnel, scientific information regarding the status of lynx on the division will be collected by employing a combination of the following:

- Surveys to assess relative abundance of snowshoe hares, which may help managers to determine if adequate prey resources to support lynx reproduction are available.

- Snow track surveys to determine if lynx are present during late winter, which will indicate that Canada lynx have established home ranges on the division.

- Camera trap surveys to determine if lynx are present during periods of no snow cover.

- Telemetry studies of lynx to identify activity patterns, use areas, and important habitat features, such as denning sites.

In the future, the use may be restricted in timing and/or extent based on observations relating to the presence of lynx and potential impacts of the use to their life functions.

JUSTIFICATION:

Hunting, when compatible, is defined as one of the priority public uses of the Refuge System by the National Wildlife Refuge System Improvement Act of 1997. Public hunting on Conte Refuge lands in Vermont will not have any significant impacts on the refuge environment, populations of hunted species, adjacent lands, or nearby residents. The refuge environment includes soils, vegetation, air quality, and water quality. Some disturbance to the soils and vegetation is expected in areas open to hunting, but impacts will be minimal due to the dispersed nature of the activity and the fact that soils are typically frozen and vegetation is dormant during most State hunting seasons. Hunting will benefit the composition, structure, and resiliency of the vegetation by keeping resident herbivore populations in balance with the carrying capacity of the habitat.

Disturbance to non-game wildlife will occur, however the impact will again be lessened because of the time of year hunting is permitted. Because the use is necessarily spatially dispersed and it occurs over the duration of the various State hunting seasons, any disturbance impacts will be tempered over an extended period of time and a larger area. These disturbance impacts will not materially affect the refuge's ability to fulfill its overall obligations to protect, conserve and manage fish, wildlife, or plant species as directed by the mission of the Refuge System or the refuge's legislated purposes. As documented in the intra-Service Section 7 consultation, hunting may affect, but is not likely to adversely affect any Federal-threatened or endangered species utilizing refuge lands. Likewise, the VFWD has concluded that a hunting program will not adversely affect any State-listed species.

Allowing hunting will provide a valued and traditional recreational opportunity to both local residents, people from across the State, and individuals from locations across the country. This activity and program produces a positive impact on refuge population and habitat management objectives, and purchases of food, fuel, lodging, and supplies contribute to the local economy.

Based on wildlife surveys and population estimates conducted by the State as well as the Service (in regards to migratory birds), wildlife which are harvested on refuge lands generate surplus populations and are able to sustain regulated harvest without impacting local or regional populations. Both the State and Service review harvest information annually to assess impacts on population levels and adjust, if necessary, regulations, take limits, and season lengths to assure the sustainable management of the species at the population level. Hunting does result in the taking of many individuals within the overall population, but restrictions are designed to safeguard an adequate, sustainable, and resilient breeding population from year to year. Hunting under State and Federal guidelines, as well as refuge-specific regulations, will not impact the populations of resident wildlife or migratory birds that the refuge protects and will not have adverse effects on the overall conservation of wildlife or their habitats on refuge lands. Based upon State and Federal regulations, the hunting program will operate under sound wildlife management principles and is in the public interest as directed under 50 CFR 32.1.

With regard to dog training, the outcome of the use is expected to be minimal trampling of vegetation and temporary displacement of wildlife, neither of which are expected to have long-term negative impacts on populations. The ability to communicate with houndsmen would allow for the sharing of lynx-related information and best practices when handling dogs in lynx habitat. If it is suspected that dog training may be having a negative impact on wildlife, the Service may propose a targeted research project to investigate the cause and effect of dog training on wildlife, which may lead to changes in or restrictions of the use. However, it is anticipated that dog training would not have a negative impact overall on resident wildlife or migratory birds (R. Dettmers, USFWS, pers. comm.) or the habitats they occupy.

In summary, the refuge hunt program on refuge-administered lands in Vermont will not have any appreciable impacts on the populations of hunted species, to the refuge environment, to other refuge users, to adjacent lands, or to nearby residents. By permitting public hunting the refuge is fulfilling the mission of the Refuge System by administering refuge resources for the benefit of present and future generations. For these reasons, we have determined that hunting will not materially interfere with nor detract from the fulfillment of the Refuge System mission or the purposes of the refuge.

SIGNATURE:

Refuge Manager: _____ _____
(Signature) (Date)

CONCURRENCE:

Regional Chief: _____ _____
(Signature) (Date)

MANDATORY 15-YEAR RE-EVALUATION DATE: _____

LITERATURE CITED:

Allen, R.B. 1984. Experiential Pursuit of Black Bears with Trained Bear Dogs. Proc. East. Workshop Black Bear Manage. and Res., 7:54–58.

Alt, G.L., G.J. Matula, Jr., F.W. Alt, and J.S. Lindzey. 1980. Dynamics of Home Range and Movements of Adult Black Bears in Northeastern Pennsylvania in: Bears: Their Biology and Management, Vol. 4, A Selection of Papers from the Fourth International Conference on Bear Research and Management, Kalispell, Montana, USA, pp. 131-136.

Behrend, D.F., G.F. Mattfield, W.C. Tierson and J.E. Wiley. 1970. Deer density control for comprehensive forest management. J. Forestry. 68:695-700.

Davis, D.E., J.J. Christian, and F. Bronson. 1964. Effect of exploitation on birth, mortality and movement rates in a woodchuck population. J. Wildl. Manage. 28:1-9.

Duda, M.D. 2007. Wildlife Species Management in Vermont. Responsiveness Management. 371p.

Edwards, J., M. Ford, and D. Guynn. 2003. Fox and gray squirrels. 248-261 in G. A. Feldhamer, B.C. Thompson, and J.A. Chapman, editors. Wild Mammals of North America: Biology, Management, and Conservation. John Hopkins University Press, Baltimore, Maryland, USA.

Elowe, K.D. 1990. Bear hunting with hounds: techniques and effects on bears and the public. Proc. Of 10th Eastern Black Bear Workshop. 22pp.

Federal Register. 2013. Endangered and Threatened Wildlife and Plants; Revised Designation of

Critical Habitat for the Contiguous U.S. Distinct Population Segment of the Canada Lynx and Revised Distinct Population Segment Boundary. Vol. 78, No. 187, Sept. 26, 2013.

Jakubas, W.J. 1999. Coyote assessment–1999. Maine Department of Inland Fisheries and Wildlife, 284 State Street, State House Station 41, Augusta, Maine, 04333-0041. 67 pp.

Kart, J., R. Regan, S.R. Darling, C. Alexander, K. Cox, M. Ferguson, S. Parren, K. Royar, B.

Popp, editors. 2005. Vermonts Wildlife Action Plan. Vermont Fish and Wildlife Department. Waterbury, Vermont.

Lenth, B.E., R.L. Knight, M.E. Brennan. 2011. The effects of dogs on wildlife communities. Natural Areas Journal, 28(3):218-227.

Lowry, D.A. and K.L. McArthur. 1978. Domestic dogs as predators on deer. Wildlife Society Bulletin, 6:38-39.

MacArthur, R.A., V. Geist, and R.H. Johnson. 1982. Cardiac and behavioral responses of mountain sheep to human disturbance. J. Wildl. Manage., 46:351-358.

Mainini, B., P. Neuhaus and P. Ingold. 1993. Behavior of marmots (*Marmota marmota*) under the influence of different hiking activities. Bio. Cons., 64:161-164.

Mallord, J.W., P.M. Dolman, A.F. Brown, and W.J. Sutherland. 2007. Linking recreational disturbance to population size in a ground nesting passerine. J. Applied Ecol., 44:185-195.

Marion, J.L. and Y. Leung. 2001. Trail resource impacts and an examination of alternaive assessment techniques. Journal of Park and Recreation Administration. 19(3):17-37.

Massopust, J.L., and R.K. Anderson. 1984. The response of black bear being chased by hunting dogs. Proc. East. Workshop Black Bear Manage. and Res., 7:59-65.

Miller, S.G, R.L. Knight, and C.K. Miller. 2001. Wildlife response to pedestrians and dogs. Wildl. Soc. Bull., 29:124-132.

Reed, D.J., and D.C. Guynn, Jr. 1990. Response of wild turkey hens to bear hunting in western North Carolina. Proc. Ann. Conf. Southeast. Assoc. Fish and Wildlife Agencies, 44:304-309.

Sime, C. A. 1999. Domestic Dogs in Wildlife Habitats. Pages 8.1-8.17 in G. Joslin and H.

Youmans, coordinators. Effects of recreation on Rocky Mountain wildlife: A Review for Montana. Committee on Effects of Recreation on Wildlife, Montana Chapter of The Wildlife Society. 307pp.

Steidl, R.J., and R.F. Powell. 2006. Assessing the effects of human activities on wildlife. George Wright Forum, 23:50-58.

Sterner R. T. and G. C. Smith. 2006. Modelling wildlife rabies: transmission, economics and conservation. Biological Conservation 131(2):163-179.

Stevens, R., C. Pickering, and J.G. Castley. 2011. A review of the impacts of nature based recreation on birds. Journal of Environmental Management, 92:2287-2294.

Sweeney, J.R., R.L. Marchinton, J.M. Sweeney, 1971. Responses of radio-monitored white-tailed deer chased by hunting dogs. J. Wildl. Manage., 35:707-716.

Tierson, W.C., E.F. Patric and D.F. Behrend. 1966. Influence of white-tailed deer on the logged northern hardwood forest. J. Forestry. 64:804-805.

Tilghman, N.G. 1989. Impacts of white-tailed deer on forest regeneration in northwestern Pennsylvania. J. Wildl. Manage. 53:524-532.

U.S. Department of Agriculture. 2011. Forest Service, Northern Research Station, Forest Inventory Analysis–Vermont, 2010.

U.S. Fish and Wildlife Service. 1997 National Wildlife Refuge Improvement Act 1997. Public Law 105-57-Oct. 9, 1997.

U.S. Fish and Wildlife Service. 1999. Final environmental assessment-U.S. Fish and Wildlife Service participation in a partnership to protect the Champion Lands in Essex County, Vermont, Hadley, Massachusetts.

U.S. Fish and Wildlife Service (USFWS). 2008. Flyway.us: Atlantic Flyway Council. Flyway.us, U.S. Fish and Wildlife Service. Accessed October 2016 at: *http://www.flyways.us/flyways/atlantic*

U.S. Fish and Wildlife Service (USFWS). 2010. Hunting. Office of External Affairs, U.S. Fish and Wildlife Service. Accessed October 2016 at: *http://www.fws.gov/hunting/*.

U.S. Fish and Wildlife Service. 2012. Environmental assessment–Public hunting on Silvio O. Conte National Fish and Wildlife Refuge–Nulhegan Basin Division and Putney Mountain Unit.

U.S. Fish and Wildlife Service. 2013. Hunt Management Plan, Silvio O. Conte National Fish and Wildlife Refuge-Nulhegan Basin Division and Putney Mountain Unit.

Vermont Fish and Wildlife Department. 2009. Big Game Management Plan, 2010–2020. 74pp.

Vermont Fish and Wildlife Department. 2012. 2011 Moose Season Report. 15pp.

Willette, D. 2011. Coyote Wars: A deer Hunters Guide to Hunting Coyotes. Maine Outdoor Publications, Hampden, ME. 141pp.

Yalden, P.E., and D. Yalden. 1990. Recreation disturbance on breeding golden plovers (*Pluvialis apricaris*). Biological Conservation, 51:243-262.

Young, J.K., K.A. Olson, R.P. Reading, S. Amgalanbaatar, and J. Berger. 2011. Is wildlife going to the dogs? Impacts of feral and free-roaming dogs on wildlife populations. Bioscience, 61:125-132.

COMPATIBILITY DETERMINATION

USE:

Interpretation, Environmental Education, Wildlife Observation, and Wildlife Photography

REFUGE NAME:

Silvio O. Conte National Fish and Wildlife Refuge (Conte Refuge)

DATE ESTABLISHED:

October 3, 1997

ESTABLISHING AND ACQUISITION AUTHORITY(IES):

- Silvio O. Conte National Fish and Wildlife Refuge Act (Public Law 102-212).
- Migratory Bird Conservation Act of 1929.
- Land and Water Conservation Fund Act of 1965.

REFUGE PURPOSE(S):

- To conserve, protect, and enhance the Connecticut River populations of Atlantic salmon, American shad, river herring, shortnose sturgeon, bald eagles, peregrine falcons, osprey, black ducks, and other native species of plants, fish, and wildlife.
- To conserve, protect, and enhance the natural diversity and abundance of plant, fish and wildlife species and the ecosystem upon which these species depend within the refuge.
- To protect species, listed as endangered or threatened, or identified as candidates for listing, pursuant to the Endangered Species Act of 1973 (ESA) as amended (16 U.S. 1531 et seq.).
- To restore and maintain the chemical, physical, and biological integrity of wetland and other waters within the refuge.
- To fulfill the international treaty obligations of the United States relating to fish and wildlife and wetlands.
- To provide opportunities for scientific research, environmental education, and fish and wildlife oriented recreation and access to the extent compatible with the other purposes stated in this section.

NATIONAL WILDLIFE REFUGE SYSTEM MISSION:

To administer a national network of lands and waters for the conservation, management, and where appropriate, restoration of the fish, wildlife, and plant resources and their habitats within the United States for the benefit of present and future generations of Americans.

DESCRIPTION OF USE

(a) What is the use? Is it a priority public use?
The uses are interpretation, environmental education, wildlife observation, and wildlife photography. All four of these uses are priority uses of the National Wildlife Refuge System (Refuge System) under the National Wildlife Refuge System Administration Act of 1966 (16 U.S.C. 668dd-668ee), as amended by the National Wildlife Refuge System Improvement Act of 1997 (Public Law 105-57). Visitors access the refuge and conduct these uses by walking, hiking, snowshoeing, cross-country skiing, bicycling on public roadways, and driving

motor vehicles (street registered vehicles) on public roads. On refuge divisions and units that allow boating and/or snowmobiling, some visitors engaged in these uses may access the refuge by boat or snowmobile. These uses are proposed on Conte Refuge to increase the public's knowledge, understanding, and appreciation of the refuge's natural resources and wildlife. By participating in these uses, we hope that visitors will support the refuge and Refuge System and be inspired to conserve natural resources.

(b) Where will these uses be conducted?
Wildlife observation and photography occur along refuge roads and trails, in parking areas, and in other areas open to public use. These uses will also occur in refuge facilities, as visitor contact stations, other onsite facilities, boardwalks, observation decks, and photography blinds. There are existing public use facilities at the Nulhegan Basin Division, Pondicherry Division, Putney Mountain Unit, and the Great Falls Discovery Center. Although these uses also occur on other existing refuge divisions and units, these other division and units do not have any existing public use infrastructure. The Dead Man's Swamp Unit in Connecticut and the Wissatinewag Unit in Massachusetts are closed to these uses to protect sensitive resources. The Mount Tom Unit in Massachusetts is also currently closed due to safety and vandalism concerns.

Interpretation and environmental educational programs, workshops, and talks will also occur in designated locations on refuge lands. Occasionally, these programs may occur in areas generally closed to the public. For example, special interpretive walks may be offered periodically at the Venture Smith Site located on the Salmon River Division due to its historical significance.

Some interpretation and environmental education will also occur off-refuge using the Watershed on Wheels Express (The WoW Express). The WoW express is a traveling visitor facility and outdoor classroom that visits schools and other venues throughout the Connecticut River watershed. This staffed vehicle houses interpretive exhibits about the refuge and watershed, and their natural resources.

In addition to existing refuge facilities and the WoW Express, we are proposing some additional public use facilities on existing refuge lands and lands proposed for future acquisition in the refuge's Comprehensive Conservation Plan (CCP). For example, at the Roger Tory Peterson Unit, we propose to work with the Friends Group and other partners to possibly renovate Roger Tory Peterson's former studio to serve as a visitor contact facility. Several new trails are also proposed at the Nulhegan Basin Division. Two will connect to already existing trails–the Nulhegan River Trail and a proposed riverside campsite and a connector trail between Lewis Pond Overlook and the Green Mountain Club's Gore Mountain Trail. The Nulhegan River Trail spur will be approximately 500 feet long and the Gore Mountain Trail spur will be roughly 1.4 miles long. In addition, a new loop trail is planned extending from the Lewis Pond Overlook. This trail will use 0.5 miles of existing cleared trail, with 0.8 miles of new trail tread. At the Putney Mountain Unit, two trail segments are proposed to provide a linkage between existing trails on the unit and the Putney Mountain Association's larger trail network. All of these will be primitive trails, with an 18-inch mineral surface tread and 3-foot wide cleared path to minimize vegetation clearing.

As we acquire additional refuge lands, we propose to construct parking lots, kiosks, and ADA-accessible trails on each refuge division. We may also construct additional public use facilities (e.g., wildlife observation blinds, platforms, blinds, interpretive kiosks and panels, restrooms, etc.) on existing and proposed refuge lands to help facilitate these uses. Some projects may be subject to compliance with the National Environmental Policy Act of 1969 (NEPA) and may require an environmental assessment and additional public review and comment.

(c) When will the uses be conducted?
These uses occur on the refuge year-round, during refuge open hours. All refuge units are open daily from one-half hour before sunrise to one-half hour after sunset, with the following exceptions:

- The Nulhegan Basin Division (Brunswick, VT): The Nulhegan Basin Division is open 24 hours a day, 7 days a week for approved uses. The roads at the division are not plowed and many are used as snowmobile trails between December 15 to April 15, snow conditions permitting. During this time, only snowmobiles are allowed on the roads. All roads are closed to motor vehicle travel during mud season, which follows the snowmobile season and generally lasts until late May (until the roads and those of Plum Creek Timber Company, our northern neighbor are dry enough to support motor vehicles without causing damage to the road surface). Only pedestrian and bicycle use is allowed during mud season.

- The Third Island Unit (Deerfield, MA) is seasonally closed (January 1 through July 31) to protect nesting bald eagles.
- Both the Dead Man's Swamp (Cromwell, CT) and the Wissatinnewag Units (Greenfield, MA) are closed to the public at all times to protect sensitive resources. The Mount Tom Unit (Holyoke, MA) is also currently closed due to public safety and vandalism concerns.

Occasional guided evening programs may also be offered, including staff and/or trained volunteer-led, citizen science activities, such as the 24-hour bird count. Requests for these uses outside of these hours must be approved by the refuge and are subject to a SUP.

(d) How will the uses be conducted?
Visitors enter the refuge at public entry points or drive to refuge parking areas and generally walk from there. To participate in these activities, visitors may park vehicles at refuge parking areas, along the shoulders of designated refuge roads (Nulhegan Basin Division), and along public roads.

Visitors engaged in wildlife observation and photography generally hike along trails or in other areas open to the public or bicycle or drive along refuge roads. Visitors engaged in these uses will also use other public use facilities, such as visitor contact stations, boardwalks, observation decks, and photography blinds. In the winter, some visitors may also cross-country ski or snowshoe along refuge roads, trails, and other areas open to the public. Some visitors also access the Nulhegan Basin and Pondicherry Division by snowmobile or use motorized or non-motorized boats in designated areas, such as Lewis Pond at the Nulhegan Basin Division.

Wildlife observation and photography are typically self-guided and visitors engaged in these uses use refuge trails, viewing areas, informational material, photo blinds, and other areas open to the public. Wildlife observation may occur in the form of bird walks, and can be facilitated by binoculars often lent by the refuge or viewing scopes that may be installed in designated areas. The Nulhegan Basin and Pondicherry Divisions are both designated Important Bird Areas and draw many birders and photographers.

Interpretation and environmental education programs include presentations by staff, volunteers, teachers, and other youth leaders, and special events and displays both on and off the refuge (e.g.,WoW Express). These activities may include:

- Formal environmental education programs (e.g., teacher- or staff-led field trips).
- More informal environmental education programs (e.g., nature study).
- Interpretive talks and guided walks.
- Self-guided interpretation (e.g., interpretive panels along trails, interpretive displays, and exhibits in visitor centers, and interpretive brochures for trails).

Interpretive information will also be provided on signs and kiosks, in printed information (e.g., brochures), exhibits, and through audiovisual presentations, as well as social media outlets. Environmental education will be delivered through on- and off-site visits, including the use of the WoW Express, interaction with Adopt-a-Habitat partners, and other appropriate methods.

The refuge will also periodically sponsor educational classes in nature photography and facilitate activities by local birding groups (e.g., the bird club at the Great Falls Discovery Center).

In addition to strategies to support these uses listed in the refuge's CCP, refuge staff will perform the following:

- Onsite evaluations to resolve public use issues.
- Monitoring and evaluation of impacts of the use on refuge resources.
- Maintenance of boundaries and signs.

- Meet with interested members of the public.
- Recruitment of volunteers.
- Preparation and presentation of interpretive and environmental education programs.
- Revision of interpretive and environmental materials.
- The creation and installation of interpretive kiosks.

(e) Why are these uses being proposed?
The Refuge System Improvement Act defines wildlife observation, photography, environmental education, and interpretation as priority public uses. Priority public uses, if found compatible on a refuge, are to receive our enhanced consideration over other general public uses. Authorizing these uses will provide opportunities for the public to enjoy wildlife and plants on the refuge in accordance with law, and it will produce better-informed public advocates for U.S. Fish and Wildlife Service (Service) programs.

These uses provide opportunities for visitors to observe and learn about wildlife, wildlands, and cultural resources at their own pace and observe wildlife in their natural habitats. These four priority uses provide visitors with opportunities to enjoy refuge resources and gain a better understanding and appreciation of fish and wildlife, wildlands ecology, the relationships of plant and animal populations in an ecosystem, and wildlife management. These activities will enhance the public's understanding of natural resource management programs and ecological concepts, enable the public to better understand and connect with the problems facing our wildlife and wildlands resources, help visitors to better understand how they affect wildlife and other natural resources, learn about the Service's role in conservation and restoration, and forge relationships that will aim to encourage the pubic to take action for the sake of the environment.

Photographers will have opportunities to photograph wildlife in its natural habitat. These opportunities will increase the publicity and advocacy of Service programs. Photography provides wholesome, safe, outdoor recreation in a scenic setting, and entices those who come strictly for recreational enjoyment to participate in the educational facets of our public use program and become advocates for the refuge and the Service.

Visitors need a way to access these priority uses. By allowing visitors to walk, hike, cross-country ski, snowshoe, bicycle, boat, snowmobile, and drive automobiles in designated areas of the refuge, we are providing access to these important priority public uses with minimal impacts to sensitive wildlife and habitat.

Continuation of these programs helps the Service meet the Refuge System's goal, to provide an understanding and appreciation of fish and wildlife ecology and human's role in their environment.

AVAILABILITY OF RESOURCES

The following list estimates the required costs for the refuge to administer and manage its current programs for wildlife observation and photography, environmental education, and interpretation. Costs associated with administering this use includes assessing the need for road and trail maintenance and repair, maintaining kiosks, gates, and traffic counters, recording collected data, maintaining signs/posting roads and trails, informing the public about the range of refuge uses, conducting visitor use surveys, analyzing visitor use patterns, monitoring the effects of public uses on refuge resources and visitors, and providing information to the public about the use. Such costs do not include the costs of new infrastructure construction, interpretive panels, signs and other costs as described in the CCP. They also do not cover unanticipated costs such as participation in search and rescue operations. The refuge's federal wildlife officer is the primary contact for any emergency operations on the refuge, however local resources are available to assist and provide resources if necessary. Because such incidents are uncommon and unpredictable, these costs are not assumed in the resources estimate below. The use of refuge staff to develop and monitor public uses and engage visitors is required for administering all refuge public uses. Therefore, these responsibilities and related equipment are accounted for in budget and staffing plans.

We estimate below the annual costs associated with the administration of these uses on the refuge.

Program Oversight (wildlife refuge manager):	$8,000
Interpretive Program Development, Environmental Education Coordination, Development of Interpretive Exhibits and Brochures (visitor services manager):	$12,000
Special Use Permits/Monitoring Resource Impacts (wildlife biologist):	$1,200
Provide Public Information/Visitor Safety (Federal wildlife officer):	$3,500
Trail and Parking Lot Maintenance (Youth Conservation Corps):	$35,000
Staff and Support for the WoW Express:	$30,000
Total Annual Cost of Program:	**$89,700**

The financial and staff resources necessary to provide and administer these uses at their current levels are now available. We expect the resources to continue in the future, subject to availability of appropriated funds. As stated above, we will need additional resources to expand and enhance these uses as described in the CCP.

ANTICIPATED IMPACTS OF THE USE

Following are descriptions of potential adverse effects on natural resources of interpretation, environmental education, wildlife observation, and wildlife photography, accessed by walking, hiking, cross-country skiing, snowshoeing, and boating in designated refuge areas and bicycling and driving on public roads. Effects of snowmobile access are addressed in a separate compatibility determination.

Effects on Hydrology and Water Quality: Visitor use has the potential to negatively impact lakes, ponds, streams and the major tributaries of the Connecticut River. Exposed soils on hiking trails may increase sediments in near-by waterways, and petroleum products may be introduced by boating activity and run-off from parking lots and roads. However, overall we do not anticipate any major impacts to hydrology and water quality because these uses are limited to designated areas only, current and projected levels of use are relatively low, and we will build, maintain, and monitor trails and roads in such ways as to minimize impacts.

Refuge visitors are encouraged to use refuge trails and roads. The majority of visitors hike along designated trails, roads, and former logging roads. Buffers will be required on trails that are adjacent to waterways to decrease bank erosion, and filter contaminants before they enter waterbodies. Boardwalks will provide a path for users to cross over the wetlands or streams and not through them, thereby minimizing long-term adverse effects to hydrology and water quality. In addition, refuge staff will routinely monitor roads, trails, and boardwalks for damage and remediate problem areas as needed.

Motorized and non-motorized boating would occur on designated refuge waterbodies in accordance with state boating regulations. The most likely locations for motor boating are Lewis Pond at the Nulhegan Basin Division and McConnell Pond, which is proposed for addition to this division. The use of motorboats is currently estimated at one to two boats per week. This low level of use is expected to continue into the future and is expected to have only minimal impacts to water quality. Boat speeds are not to exceed 5 miles per hour, so boat wakes and the associated erosion is not anticipated.

There is the potential for bicycles and cars traveling on refuge roads to impact refuge wetlands through increased soil erosion, sedimentation, and run-off or from contaminants from cars (e.g., oil and antifreeze). To minimize these impacts, cars and bicycles are only allowed on designated roads. At current and anticipated levels of use, we do not expect any greater than negligible impacts from cars and bicycles on refuge hydrology and wetlands. Refuge parking lots will not be located directly adjacent to streams, rivers, or other wetlands. Additionally, where feasible, parking lots will be constructed of gravel, which is more porous than impervious surfaces such as asphalt, and therefore would result in lower levels of runoff and sedimentation.

Trails, kiosks, and other possible public use facilities may cause short-term adverse impacts from soil runoff and sedimentation into the refuge's water resources. A more detailed discussion of the impacts of these construction projects will be addressed in a subsequent environmental assessment if appropriate.

Effects on Vegetation: To facilitate interpretation, environmental education, wildlife observation and wildlife photography, we will allow hiking, cross-country skiing, and snowshoeing access on designed trails and other areas open to the public and bicycle and automobile access on designated roads. Short-term effects consist of the deterioration of plant material, whereas long-term effects of trampling include direct and indirect effects on vegetation and soils like diminishing soil porosity, aeration, and nutrient availability through soil compaction (Kuss 1986, Roovers et al. 2004). Compaction of soils thus limits the ability of plants, particularly rare and sensitive species, to revegetate affected areas (Hammitt and Cole 1998). Kuss (1986) found that plant species adapted to wet or moist habitats are the most sensitive and increased moisture content reduces the ability of the soil to support recreational traffic. Where adverse impacts to vegetation are observed, the refuge will take necessary measures, such as remediation and trail closures, to restore plant communities.

It is anticipated that allowing foot traffic on the refuge will cause some vegetation loss, increased tree root exposure and trampling effects, however we will minimize the potential for impacts to vegetation by allowing these uses in designated areas open to the public. The majority of visitors stay on trails and roads. Off-trail use could have impacts to adjacent vegetation; however, we will encourage users to remain on existing trails (where they exist) and roads. Also, off-trail use is generally dispersed and occurs at low levels. It is also anticipated that under current and projected use the incidence of these problems will be minor. Some rare plants have been documented in habitat adjacent to trails, however, designated routes do not have any known occurrences of rare plant species on their surface or soils subject to compaction that will be impacted by this use. Because cross-country skiing and snowshoeing only occur during the winter, when plants are dormant and the ground is covered with snow, we anticipate negligible impacts to vegetation from cross-country skiing and snowshoeing. We will not allow bicycles or automobiles off of refuge roads. Refuge staff will monitor all trails, identify problem areas, and conduct appropriate restoration and protection efforts.

Effects on Soils: Visitor use on the refuge could adversely impact soils through compaction, erosion, and sedimentation. In general, we will minimize these impacts by encouraging users to stay on trails and roads and in other areas open to the public. We may close areas to the public either seasonally or permanently to minimize impacts to sensitive wildlife and habitats. We expect impacts to soils to be minor to negligible because the majority of use occurs on existing refuge trails and roads; off-trail use occurs at low levels and is dispersed.

In areas where new construction will be necessary (e.g., observation platforms, environmental education pavilion, parking lots, kiosks, roads, and trails) localized soil compaction and loss of productive soil will occur. These impacts will constitute unavoidable adverse impacts from refuge infrastructure improvements but will be short-term and temporary as restoration and revegetation of construction sites will be prioritized. Additionally, trail construction projects may cause temporary disturbance to improve trails but will lead to more stable and sustainable trails over the long term. For example, boardwalks will be constructed over sensitive wetlands to mitigate long-term impacts to wetland communities, but short-term impacts may be created during the construction phase. As warranted, impacts of new trail construction not currently under consideration would be evaluated in a supplemental environmental assessment(s), if appropriate.

Effects on Wildlife: Short-term and long-term adverse impacts will be expected for wildlife populations in relation to increasing trail miles and visitor use. However, we do not anticipate any major, long-term impacts on wildlife from allowing these uses because current and projected levels of use are relatively low and these uses are only allowed in designated areas open to the public.

Disturbances to wildlife will vary by wildlife species involved and the type, level, frequency, duration, and the time of year activities occur. Beale and Monaghan (2004) found that adverse effects to wildlife increase as number of users increase. The study found that an animal's response to one visitor walking down a trail is entirely different than its response to a group of users walking down a trail. The refuge recognizes that large group sizes may amplify negative effects to wildlife. Therefore, groups larger than 10 are required to notify the refuge prior to visiting to determine if a SUP would be needed. This will enable the refuge to understand which trails are preferred by large groups, and to monitor any potential excessive wildlife disturbance created by large groups. Having the ability to monitor these kinds of disturbances will also enable the refuge to mitigate impacts associated with large groups. Examples of mitigation may include directing large groups to less sensitive habitats during breeding seasons or assigning refuge staff to lead or meet with the group while on refuge lands.

Disturbance can cause shifts in habitat use, abandonment of habitat, and increased energy demands on affected wildlife (Knight and Cole 1991). Miller et al. (1998) found bird abundance and nesting activities (including nest success) increased as distance from a recreational trail increased in both grassland and forested habitats. In this study, common species (e.g., American Robins) were found near trails and rare species (e.g., Blackburnian warblers) were found farther from trails. In some cases there is a clear link between the extent of disturbance and either the survival or reproductive success of individuals (e.g., Schulz and Stock 1993), but in many cases disturbance act in a more subtle way, by reducing access to resources such as food supplies or nesting sites (Gill et al. 1996). Bird flight in response to disturbance can lower reproductive success by exposing individuals and nests to predators. For recreation activities that occur simultaneously (hiking, biking, and horseback riding) there will likely be compounding negative impacts to wildlife (Knight and Cole 1991).

Evidence suggests that species most likely to be adversely affected are those where available habitat is limited thus constraining them to stay in disturbed areas and suffer the costs of reduced survival or reproductive success (Gill et al. 2001). Species that are sensitive to human disturbance with specialized habitat requirements include bald eagles, peregrine falcons, and American black ducks (DeGraff et al. 2001, Longcore et al. 2000). Limiting or closing recreational use within the vicinity of nest sites during the breeding season will mitigate impacts to these species. For example, the Third Island Unit of the refuge is closed to these uses to protect bald eagles during the sensitive breeding season. Additionally, trail development has striven to and will continue to avoid sensitive habitats.

Wildlife disturbance may be compounded by seasonal needs. For example, causing mammals to flee during winter months would consume stored fat reserves that are necessary to get through the winter. Hammitt and Cole (1998) found white-tailed deer females with young are more likely to flee from disturbance than those without young. Some species, like warblers, would be negatively affected by disturbance associated with bird watching particularly during the breeding season.

For songbirds, Gutzwiller et al. (1994) found that low levels of human intrusion altered the singing behavior of some species. Disturbance may also affect the reproductive fitness of males by hampering territory defense, mate selection, and other reproductive functions of vocalizations (Arrese 1987). Disturbance, which leads to reduced singing activity, makes males rely more heavily on physical deterrents, which are time- and energy-consuming in defending territories (Ewald and Carpenter 1978).

Short-term localized adverse impacts to fish populations may result from refuge construction and restoration projects that might cause soil erosion and sedimentation into refuge waterways. Long-term adverse impacts from increased trail miles and trail use might pose another concern to refuge fisheries. Trails that have stream and river crossings will likely degrade over time with increased use and contribute to downstream sedimentation and turbidity, which has been found to be a stressor to brook trout (Sweka and Hartman 2001) and redside dace (Holm and Crossman 1986) populations that are sensitive to habitat degradation. Buffers will be required for trails located along riparian areas to decrease erosion of river banks, and filter contaminants before they enter waterways. The refuge will monitor stream and river crossings closely and remediate any damaged areas to minimize adverse impacts associated with trail use.

Refuge visitors who choose to boat may cause localized, minor, short-term impacts by disturbing the bottom substrate in shallow water. In addition, discarded items such as plastic containers present a risk for waterfowl and other birds. As mentioned earlier, we expect these impacts to be negligible due to very low number of boaters on the refuge.

We will take all necessary measures to minimize all of these impacts, particularly where group educational activities are involved. We will evaluate the sites and programs periodically to assess whether they are meeting the objectives, and to prevent site degradation. If evidence of unacceptable adverse impacts appears, we will rotate the activities to secondary sites, or curtail or discontinue them. If necessary, we will close areas seasonally around active bird nesting sites and avoid recreational use of areas where federally listed species occur to minimize or eliminate human disturbance. We will post and enforce refuge regulations, and establish, post, and enforce closed areas.

PUBLIC REVIEW AND COMMENT:

This compatibility determination was distributed for public comment for 90 days from August 18, 2015 to November 16, 2015 as part of the review of the Silvio O. Conte Refuge's draft CCP/EIS. Comments we received on this use were considered as we developed this final determination. This determination will undergo another 30-day review with release of the final CCP/EIS. A summary of comments received on the draft plan is included in appendix O of the final CCP/EIS.

DETERMINATION (CHECK ONE BELOW):

____ Use is not compatible

__X__ Use is compatible, with the following stipulations

STIPULATIONS NECESSARY TO ENSURE COMPATIBILITY:

The refuge has developed a list of criteria for determining whether any given route (e.g., trail, road, etc.) would be appropriate for interpretation, environmental education, wildlife observation, and wildlife photography. These criteria apply to current and future trails and are designed to help minimize negative impacts to soils, vegetation, and wildlife and to provide high-quality experiences to visitors. Criteria are as follows:

Checklist for Existing Routes to Be Eligible for Compatibility Consideration

(Routes must meet all criteria)

(1) The route provides an opportunity to view a variety of habitats and wildlife.

(2) The route is safe for the proposed types and amount of use.

(3) The route requires minimal annual maintenance (e.g., use waterbars and stepping stones, etc., to reduce soil and hydrology impact) to ensure safe access and to prevent further habitat degradation.

(4) The route has a low potential for fragmenting habitat or disturbing wildlife populations.

(5) Based on existing soils information, less than 50 percent of the route's length occupies soil types rated as high or very high for compaction and/or erosiveness. The route is not rated as severely limited for hiking trails based on appropriate county soil surveys.

(6) Any route crossing of sensitive soils occupies the shortest possible distance. Organic soil crossings are minimized or eliminated.

(7) Continued use of the existing route is not likely to cause further wetland alteration or degradation. There is low risk that hydrology, soil stability, sensitive plant communities, riparian zones, and wildlife habitats would be adversely affected.

(8) The route predominately occupies previously modified substrate (graveled, compacted, or filled), such as former logging roads and rail grades.

(9) The route is not incised more than 1-foot deep over 10 percent of its total length.

Additional stipulations that will apply to ensure compatibility include:

- Refuge regulations will be posted at trailheads and entrance kiosks and enforced. Closed areas will be established as needed, posted, and enforced. Signs necessary for visitor information, safety, and traffic control will be kept up to date.

- The known presence of a threatened or endangered species will trigger discussions with the Service's New England Field Office prior allowing any new use of an area.
- We will choose locations for public uses to minimize impacts to wildlife and habitat. We will periodically evaluate sites and programs to assess whether objectives are being met and to prevent site degradation. If evidence of unacceptable adverse impacts appears, the location(s) of activities will be rotated with secondary sites or the use will be reduced or discontinued.
- Bicycles and automobiles are only allowed on designated refuge roads. Bicycles and automobiles are not allowed on refuge trails or offroad.
- All-Terrain Vehicles (ATVs) and other off-road vehicles are not permitted in the refuge.
- Boating may only occur in designated waterways and boat operators must obey posted speed limits.
- Visitors engaged in walking, hiking, snowshoeing, and cross-country skiing are encouraged to stay on designated refuge trails and roads, where these exist.
- These uses are restricted to refuge open hours: one-half hour before sunrise until one-half hour after sunset (except the Nulhegan Basin Division, which is open 24 hours a day for individuals engaged in these approved uses).
- The refuge conducts an outreach program to promote public awareness and compliance with public use regulations on the refuge.
- Group size is encouraged to be no more than 10 persons to promote public safety, accommodate other users, and reduce wildlife disturbance. Groups larger than 10 persons must contact the refuge office prior to visiting the refuge so that staff can determine if the group will require a SUP. Groups traveling only on roads shared with vehicles are not required to contact the refuge office or obtain a SUP.
- All routes designated for public access are annually inspected for maintenance needs. Prompt action is taken to correct any conditions that risk public safety. Roads and trails are maintained at a level that reasonably accounts for safe travel. Roads are not plowed in winter.
- Guidelines to ensure the safety of all participants will be issued in writing to any special use permit holder for the activities and will be reviewed before the activity begins.
- Routes designated for public access are monitored periodically to determine if they continue to meet the compatibility criteria (listed above) established by the refuge. Should monitoring and evaluation of the use(s) indicate that the compatibility criteria are or will be exceeded, appropriate action will be taken to ensure continued compatibility, including modifying or discontinuing the use.
- Routine law enforcement patrols are conducted throughout the year. The patrols promote education and compliance with refuge regulations, monitor public use patterns and public safety, and document visitor interaction.
- Potential conflicts with other public uses such as hunting will be minimized by using trailhead signs and other media to inform the visitors about current public use activities as well as which activities are authorized in specific locations throughout the refuge.

JUSTIFICATION

Interpretation, environmental education, wildlife observation, and wildlife photography are all priority public uses and are to receive enhanced consideration on national wildlife refuges, according to the Refuge Improvement Act of 1997. Providing increased wildlife-dependent recreational opportunities promotes visitor appreciation and support for refuge programs, as well as habitat conservation efforts in the Connecticut River watershed.

Wildlife observation, photography, environmental education, and interpretation activities generally support refuge purposes and impacts can largely be minimized (Goff et al. 1988). Interpretation and environmental education can also help to develop a resource protection ethic within society. They allow us to educate refuge visitors about endangered and threatened species management, wildlife management, ecological principles and ecological communities. Environmental education and interpretation also instill an 'ownership' or 'stewardship' ethic in visitors. These uses strengthen Service visibility in the local community.

The majority of visitors to the refuge come to view and/or photograph wildlife and habitats. There will be some visitor impacts from this activity, such as trampling vegetation (Kuss and Hall 1991) and disturbance to wildlife (Burger 1981, Klein, 1989); however, stipulations to ensure compatibility will make these impacts minimal. For example, we encourage visitors to stay on trails and roads and, if necessary, will close areas to these uses to protect sensitive habitats (e.g., wetlands) and wildlife (e.g., breeding birds).

By encouraging visitors to stay in designated areas open to the public, impacts to vegetation, soils, hydrology, wetland communities, wildlife, and ecological integrity of the refuge will be minimized. Because the majority of visitors use designated trails and roads on a small percentage of the refuge, disturbance will be limited and manageable. Through proper trail maintenance these impacts will be further reduced. Hydrologic and soil impacts were generally inherited with refuge lands and are being remediated through routine maintenance operations. These uses will not affect the refuge's ability to restore impacted lands nor will they materially increase sedimentation, erosion, or hydrologic impacts on refuge lands. Also, current and projected future levels of use are low, so we expect impacts to refuge soils, wildlife, and vegetation to be minor. We also have stipulations in place to further reduce impacts to refuge resources, such as limiting group sizes, closing sensitive areas, if necessary, to public use, and guidelines for designing and future trails.

These uses will not have an effect on threatened or endangered species, because these uses will not be allowed in areas where known federally listed species exist. For example, we have closed the refuge's Dead Man's Swamp Unit to prevent impacts to the federally threatened Puritan tiger beetle. Wherever listed plants or wildlife occur, we will close these areas to visitor use. The refuge will work with the Service's Ecological Services Office to ensure that no adverse effects will occur. We will insure that no trails or human impacts will be allowed in the areas where these species either exist or have been sited.

For these reasons, allowing these uses will detract from the refuge's purposes, the Fish and Wildlife Act (1956), or the mission of the Refuge System for conserving, managing, restoring, and protecting wildlife resources. Based on this information, we have determined that environmental education and interpretation and wildlife observation and photography will not materially interfere with or detract from the mission of the Refuge System or the purposes for which the refuge was established.

SIGNATURE:

Refuge Manager: _____ _____
(Signature) (Date)

CONCURRENCE:

Regional Chief: _____ _____
(Signature) (Date)

MANDATORY 15-YEAR RE-EVALUATION DATE:

_____

LITERATURE CITED:

Arrese, P. 1987. Age, intrusion pressure and defense against floaters by territorial male Song Sparrows. Animal Behavior 35:773-784.

Beale, C.M., and P. Monaghan. 2004. Human disturbance: people as predation-free predators? Journal of Applied Ecology 41:335-343.

Burger, J. 1981. Effect of human activity on birds at a coastal bay. Biological Conservation 21:231-241.

DeGraaf, R. and M. Yamasaki. 2000. New England Wildlife Habitat, Natural History and Distribution.

Ewald P. W., and F. L. Carpenter. 1978. Territorial responses to energy manipulations in the Anna hummingbird. Oecologia 31: 277-292.

Ford, M. 2002. Personal Communication with Mark Ford, U.S. Forest Service, Parsons, WV. May 3, 2002.

Gill, J. A.,W.J. Sutherland, and A.R. Watkinson. 1996. A method to quantify the effects of human disturbance on animal populations. Journal of Applied Ecology 33:786-792.

Goff, G.R., D.J. Decker and G. Pomerantz. 1988. A Diagnostic Tool for Analyzing Visitor Impacts on Wildlife Refuges: A Basis for a Systematic Approach to Visitor Management. Trans. Northeast Sect. Wildl. Soc. 45:82.

Gutzwiller, K.J., R.T. Wiedenmann, K.L. Clements, and S.H. Anderson. 1994. Effects of human intrusion on song occurrence and singing consistence in subalpine birds. The Auk 111: 28–37.

Hammitt, W.E., and D.N. Cole. 1998. Wildlife Recreation: Ecology and Management (2nd edition). New York: John Wiley & Sons. 361p.

Hamr, J. 1988. Disturbance behavior of chamois in an alpine tourist area of Austria. Mountain Research and Development 8:65-73.

Holm, E., and E.J. Crossman. 1986. A report on a 1985 attempt to resurvey areas within the Ontario distribution of Clinostomus elongatus, the redside dace and to summarize previous records. Unpublished report on file Fisheries Branch, Ontario Ministry of Natural Resources and Royal Ontario Museum. 11 pages, 9 tables, 13 figs.

Kenney, S.P. and R.L. Knight. 2002. Flight distances of black-billed magpies in different regimes of human density and persecution. Condor 94:545-547.

Klein, M.L. 1989. Effects of high levels of Human Visitation on Foraging Waterbirds at J.N. “Ding” Darling NWR, Sanibel, Florida. Final Report to USFWS. 103pp.

Knight, R.L., and D.N. Cole. 1991. Effects of recreational activity on wildlife in wildlands. Transactions of the 56th North American Wildlife and Natural Resources Conference pp.238-247.

Knight, R.L., and D.N. Cole. 1995. Wildlife responses to recreationists. Pages 51-69 in R.L. Knight and D.N. Cole, editors. Wildlife and recreationists: coexistence through management and research. Washington, DC., Island Press, 372 pp.

Kuss, F.R. 1986. A review of major factors influencing plant responses to recreation impacts. Environmental Management, 10:638-650.

Kuss, F.R., and C.N. Hall. 1991. Ground flora trampling studies: Five years after closure. Environmental Management 15(5):715-727.

Longcore, Jerry R., Daniel G. Mcauley, Gary R. Hepp and Judith M. Rhymer. 2000. American Black Duck (Anas rubripes), The Birds of North America Online (A. Poole, Ed.). Ithaca: Cornell Lab of Ornithology; Retrieved from the Birds of North America Online: *http://bna.birds.cornell.edu/bna/species/481*

MacArthur, R.A., V. Geist, and R.H. Johnston. 1982. Cardiac and behavioral responses of mountain sheep to human disturbance. Journal of Wildlife Management 46:351-358.

Miller, S.G., R.L. Knight, and C.K. Miller. 1998. Influence of recreational trails on breeding bird communities. Ecological Applications 8:162-169.

Pauley, T. 1991. Cheat Mountain Salamander *(Plethodon nettingi)* recovery plan. U.S. Fish and Wildlife Service, Newton Corner, MA.

Rizzo, A. 2002. Personal Communications with Al Rizzo, Soil Scientist, U.S. Fish and Wildlife Service. April 17-19, 2002.

Roovers, P., K Verheyen, M. Hermy, and H. Gulinck. 2004. Experimental trampling and vegetation recovery in some forest and heathland communities. Applied Vegetation Science 7:111-118.

Schultz, R.D., and J.A. Bailey. 1978. Responses of national park elk to human activity. Journal of Wildlife Management 42:91-100.

Schultz, R.D., and M. Stock. 1993. Kentish plovers and tourist-competitors on sandy coasts? Wader Study Group Bulletin 68 (special issue): 83-92.

Sweka, J.A., and K.J. Hartman. 2001. Effects of turbidity on prey consumption and growth in brook trout and implications for bioenergetics modeling. Canadian Journal of Fisheries and Aquatic Sciences 58: 386-393.

U.S. Fish and Wildlife Service (USFWS). 1979. Final Environmental Impact Statement-Acquisition of lands for the Canaan Valley National Wildlife Refuge, West Virginia. Department of the Interior - U.S. Fish and Wildlife Service.

U.S. Fish and Wildlife Service. 1994. Final Environmental Assessment - Acquisition of lands for the Canaan Valley National Wildlife Refuge, West Virginia. Department of Interior - U.S. Fish and Wildlife Service, Hadley, Massachusetts. 50 pp.

U.S. Fish and Wildlife Service (USFWS). 2001. Appalachian northern flying squirrel recovery plan. West Virginia Field Office, Elkins, WV.

U.S. Fish and Wildlife Service (USFWS). 2007. Indiana Bat *(Myotis sodalis)* Draft Recovery Plan: First Revision. U.S. Fish and Wildlife Service, Fort Snelling, MN. 260 pp.

U.S. Fish and Wildlife Service (USFWS). 1993. Puritan Tiger Beetle, *Cicindela puritana*, Recovery Plan. Hadley, MA.