DRAFT

ENVIRONMENTAL ASSESSMENT OF WRECK REMOVAL AND DEBRIS RECOVERY AT KINGMAN REEF AND PALMYRA ATOLL NATIONAL WILDLIFE REFUGES

Prepared for:

US Fish and Wildlife Service
Pacific Reefs National Wildlife Refuges and Monuments Complex
300 Ala Moana Boulevard
Rm 5-231, PO Box 50167
Honolulu, HI 96850

August 16, 2013

Prepared by:

Windward Environmental LLC
200 West Mercer Street, Suite 401
Seattle, Washington 98119

Global Diving and Salvage, Inc.
3840 West Marginal Way SW
Seattle, Washington 98106

Table of Contents

Tables iii

Figures iii

Acronyms iv

Executive Summary ES-1

1 Introduction 1
- 1.1 REGULATORY CONSIDERATIONS 1
- 1.2 AFFECTED ENVIRONMENT 4
  - 1.2.1 Kingman Reef 4
  - 1.2.2 Palmyra Atoll 8
- 1.3 THREATENED, ENDANGERED, OR OTHERWISE PROTECTED SPECIES 14

2 Purpose of the Preferred Action Alternative 15

3 Need for the Preferred Action Alternative 15
- 3.1 BASELINE CONDITION: KINGMAN REEF 16
- 3.2 BASELINE CONDITION: PALMYRA ATOLL 19

4 Alternatives 21
- 4.1 NO ACTION ALTERNATIVE 21
- 4.2 PREFERRED ACTION ALTERNATIVE 22
  - 4.2.1 Sub-Action A – Kingman Reef fishing vessel salvage 29
  - 4.2.2 Sub-Action B – *F/V Hui Feng No. 1* Salvage 33
  - 4.2.3 Sub-Action C—*Rust Island* Salvage 43

6 Environmental Effects 43
- 6.1 NO ACTION ALTERNATIVE 44
- 6.2 PREFERRED ACTION ALTERNATIVE 45
  - 6.2.1 Sub-Action A – Kingman Reef salvage 45
  - 6.2.2 Sub-Action B – *F/V Hui Feng No. 1* Salvage 53
  - 6.2.3 Sub-Action C – *Rust Island* salvage 59
- 6.3 SUMMARY OF ENVIRONMENTAL EFFECTS BY ALTERNATIVE 59
- 6.4 CUMULATIVE IMPACTS 61
- 6.5 SIGNIFICANT UNAVOIDABLE NEGATIVE EFFECTS 62
- 6.6 RELATIONSHIP BETWEEN LOCAL SHORT-TERM USES OF THE ENVIRONMENT AND LONG-TERM PRODUCTIVITY 62
- 6.7 IRREVERSIBLE AND IRRETRIEVABLE COMMITMENT OF RESOURCES 63
- 6.8 CULTURAL AND ECONOMIC IMPACTS OF ALTERNATIVES 63
  - 6.8.1 No Action alternative 63
  - 6.8.2 Preferred Action Alternative 63

7 Consultation and Coordination **64**
7.1 REGULATORY FRAMEWORK 64
7.2 AGENCY SCOPING AND REVIEW 66

8 List of Preparers **66**

9 Agencies, Organizations, and Persons Consulted **66**

10 References **66**

Appendices

Appendix A. List of Species of Conservation Concern Known to Transit Palmyra Atoll and Kingman Reef

Appendix B. Scope of Work Provided by USFWS

Appendix C. Final Technical Approach Submitted to USFWS

Tables

Table 1. Summary of possible adverse impacts of alternatives 60

Figures

Figure 1. Locations of Kingman Reef and Palmyra Atoll National Wildlife Refuges 3

Figure 2. Map of Kingman Reef 5

Figure 3. Map of Palmyra Atoll 11

Figure 4. Schematic of shallow-draft transport vessel 25

Figure 5. Schematic of low-ground-pressure lifting vehicle 27

Figure 6. Location of the Kingman Reef fishing vessel 31

Figure 7. Palmyra Atoll Sub-Action B and Sub-Action C proposed action areas 35

Figure 8. Schematic of elevated platform to be used at Palmyra Atoll 39

Figure 9. Positions of elevated platform during Sub-Action B 41

Acronyms

Acronym	Definition
BMP	best management practice
CCA	crustose coralline algae
CE	categorical exclusion
CEQ	Council on Environmental Quality
CFR	Code of Federal Regulation
CWA	Clean Water Act
CZMA	Coastal Zone Management Act
DOD	US Department of Defense
DOI	US Department of the Interior
EA	environmental assessment
EEZ	exclusive economic zone
EFH	essential fish habitat
EPA	US Environmental Protection Agency
ESA	Endangered Species Act
FR	Federal Register
F/V	fishing vessel
FWCA	Fish and Wildlife Coordination Act
GPS	global positioning system
IUCN	International Union for Conservation of Nature
IWC	International Whaling Commission
LGPLV	low-ground-pressure lifting vehicle
MLLW	mean lower low water
NEPA	National Environmental Policy Act
NOAA	National Oceanic and Atmospheric Administration
NWR	National Wildlife Refuge
MMPA	Marine Mammal Protection Act
Monument	Pacific Remote Island Marine National Monument
PARC	Palmyra Atoll Research Consortium
SDTV	shallow-draft transport vessel

TNC	The Nature Conservancy
USC	US Code
USCG	US Coast Guard
USFWS	US Fish and Wildlife Service
USGS	US Geological Survey

Executive Summary

The US Fish and Wildlife Service is proposing to restore the coral reef ecosystems of Kingman Reef and Palmyra Atoll National Wildlife Refuges (NWRs) by permanently removing three sunken vessels and their associated debris in a manner that minimizes harm to the ecosystem while maintaining a high probability of success. Coral reefs at Palmyra Atoll and Kingman Reef NWRs, within the Pacific Remote Islands Marine National Monument, are considered to be some of the most pristine coral reef environments in the world because of their relative isolation and the lack of anthropogenic inputs (e.g., coastal pollution discharges, overfishing, urban runoff). The sunken vessels have been linked to adverse physical and biogeochemical impacts on the two reef communities, and the removal of the vessels is expected to result in obvious benefits to those reef communities.

Specifically, coral in the Kingman Reef NWR has been physically abraded by a teak fishing vessel and associated debris, and iron from the debris has been linked to the proliferation of a non-native, invasive macroalga, *Derbesia tenuissima* (Kelly et al. 2012), which has overgrown and killed sensitive hard corals and crustose coralline algae at Kingman Reef.

At the Palmyra Atoll NWR, leaching iron from *F/V Hui Feng No. 1*, a sunken fishing vessel, has been linked to the proliferation of *Rhodactis howesii*, a corallimorph cnidarian that has overgrown and killed sensitive hard corals (Kelly et al. 2012; Work et al. 2008; Norström et al. 2009). Removing the shipwrecks would eliminate the source of physical impacts as well as iron from the wrecks, which are thought to be causing community-level effects. Leaving the vessels in place would result in the continued degradation of the reefs over time.

All reasonable and potential impacts resulting from the proposed salvage operations on protected species of marine mammals and reptiles have been considered as possible impacts to cultural and economic resources provided by the Palmyra Atoll and Kingman Reef NWRs. Potential impacts in the uplands of Palmyra Atoll are not expected to occur because the action would take place entirely in the marine environment. It is expected that short-term impacts caused by the operations are far outweighed by the net benefit to the biological community. Furthermore, the implementation of best management practices (BMPs) and contingency planning would minimize impacts to protected species to the maximum extent practicable. Additional factors related to specific species (e.g., frequency of site use) would further limit such impacts.

1 Introduction

1.1 REGULATORY CONSIDERATIONS

The *Ecological Assessment of Wreck Removal and Debris Recovery at Kingman Reef and Palmyra Atoll National Wildlife Refuges* has been designed to comply with requirements of the National Environmental Policy Act (NEPA) (42 USC 4321 et seq.) as well as to informally address Section 7 of the Endangered Species Act (ESA) (7 USC 136 and 16 USC 1531 et seq.) as they relate to three shipwreck salvage operations proposed by the US Fish and Wildlife Service (USFWS). The purpose of NEPA is "to identify and assess the reasonable alternatives to proposed actions that will avoid or minimize adverse effects of these actions upon the quality of the human environment" (40 CFR 1500.2(e)). A list of USFWS actions that typically receive categorical exclusion (CE) from further NEPA consideration is provided by USFWS (2008); this list does not include ship salvage operations or restoration actions of a similar nature. Although the proposed salvage operations are not expected to have a significant impact on any human environment and a CE was not warranted, an environmental assessment (EA) needed to be completed. Therefore, this EA identifies and assesses the direct and indirect effects on the human environment as well as cumulative impacts on that environment, as defined by the White House Council on Environmental Quality (CEQ) (40 CFR 1508).

Two potential actions were assessed, a No Action alternative, which maintains the status quo, and a Preferred Action alternative, which includes three related sub-actions, each a separate salvage operation at either Kingman Reef or Palmyra Atoll National Wildlife Refuge (NWR). Each sub-action is described independently because of the differences in ecological settings between Kingman Reef and Palmyra Atoll, the varying baseline impacts of the three sunken vessels on their individual locations, and the differences in the approaches proposed to remove and recover the vessels and their associated debris.

In addition to considerations associated with NEPA, this document addresses species protected by ESA as part of an informal Section 7 consultation. The purpose of ESA is to protect federally listed species from activities that could result in "take" (i.e., harassment, physical injury, capture, impaired habitat quality, impaired reproduction, or death) or ultimately jeopardize the existence of a protected species. A comprehensive list of threatened or endangered species was provided by USFWS (and corroborated by the National Oceanic and Atmospheric Administration (NOAA) National Marine Fisheries Service (NOAA Fisheries) prior to undertaking this assessment.

Species protected under the Marine Mammal Protection Act (MMPA) (16 USC 1361 et seq., as amended) and Magnuson-Stevens Fishery Conservation and Management Act (Public Law 94-265, as amended) have been considered briefly in this EA, as was the

possible degradation of water quality as defined by the Clean Water Act (CWA) (33 USC 1251 et seq., as amended).

The three proposed action areas are within the Line Islands chain of the US Minor Outlying Islands, which are outside of the jurisdiction of any state agency; therefore, the actions proposed under the Preferred Action alternative are not subject to any state regulation. On January 18, 2001, US Department of the Interior (DOI) Secretary's Order 3223 established the Kingman Reef NWR to protect the natural character, including fish, wildlife, plants, coral reef communities, and other resources of Kingman Reef and all reefs surrounding 12 nautical miles around Kingman Reef. Secretary's Order 3224 likewise established the Palmyra Atoll NWR to protect and preserve the natural character of fish, wildlife, plants, coral reef communities and other resources associated with the tidal lands, submerged lands, and waters of Palmyra Atoll out to 12 nautical miles. Pursuant to Presidential Proclamation 8336 (76 FR 18775), the Kingman Reef and Palmyra Atoll NWRs (in which the action areas are located) were made part of the Pacific Remote Islands Marine National Monument, hereafter referred to as the Monument, on January 6, 2009 (Figure 1). Secretary's Order 3284 of January 16, 2009, delegated all of the DOI management responsibility and authority for the Monument, including both Kingman Reef and Palmyra Atoll NWRs out to 50 nautical miles of mean low water to the USFWS. This broad area is far beyond and outside the proposed action areas and so is not discussed further in this EA. NOAA Fisheries also has regulatory jurisdiction over fishery-related activities beyond the 12-nautical-mile NWR boundaries to various marine species assessed in this EA (e.g., Hawaiian monk seal [*Monachus schauinslandi*]).

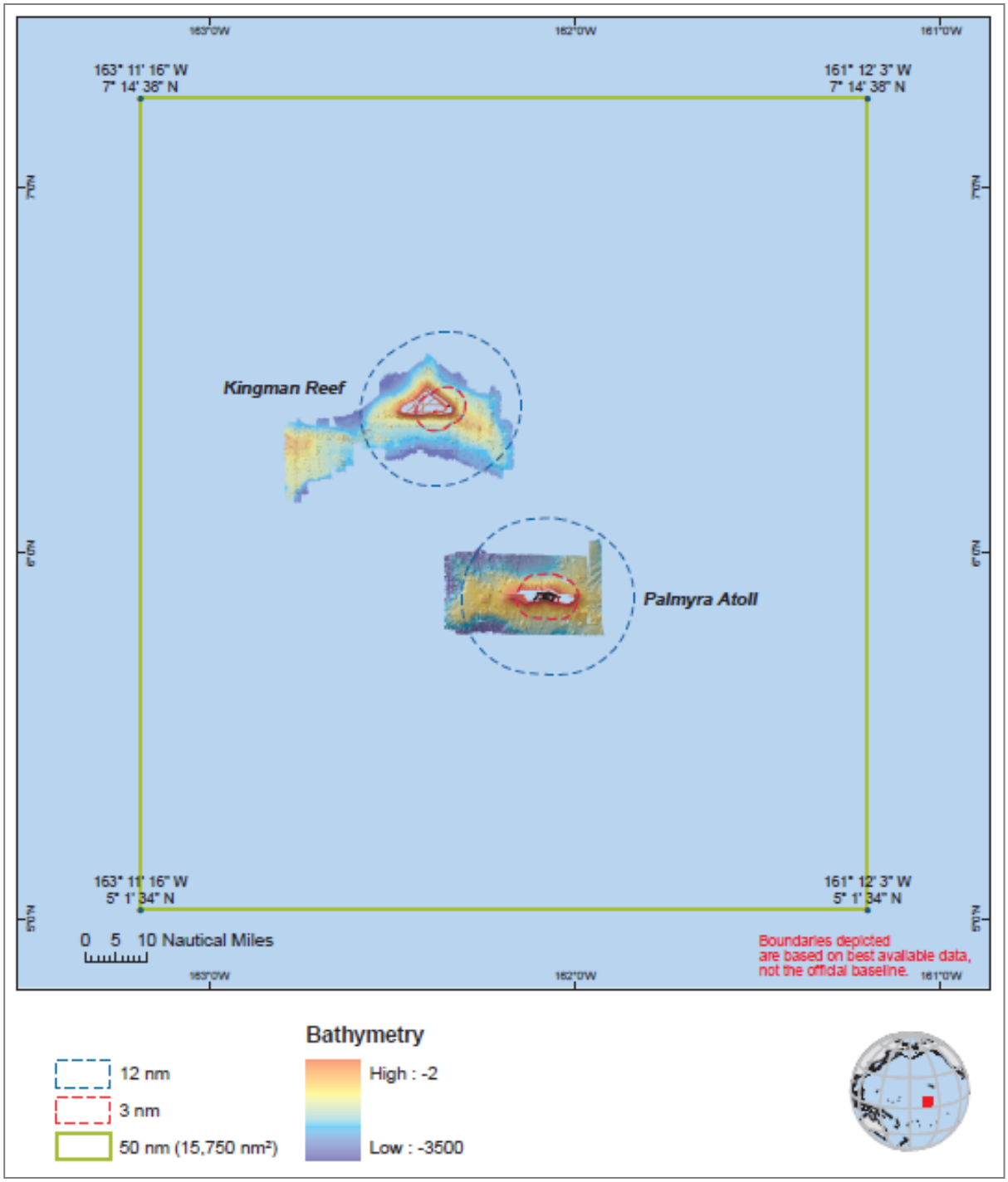

Source: USFWS (2013)

Figure 1. Locations of Kingman Reef and Palmyra Atoll National Wildlife Refuges

1.2 AFFECTED ENVIRONMENT

There are no permanent human residents in the vicinity of the proposed action areas. Palmyra Atoll has a very small, non-permanent human population (~20 scientists), and Kingman Reef is entirely uninhabited. Furthermore, because Kingman Reef and Palmyra Atoll were not historically inhabited by humans prior to Western contact, there are no known anthropological resources at either location.

1.2.1 Kingman Reef

Kingman Reef is a small, largely submerged equatorial landmass within the Northern Line Islands, approximately 930 nautical miles south of Hawaii and halfway between Hawaii and American Samoa (DOI 2013a).The reef is triangular in shape with a large, deep lagoon surrounded by a shallow, highly productive coral community. The entire area of the reef is approximately 1,958.01 square kilometers (Figure 2), of which only 0.01 square kilometer is emergent (USFWS 2011d). Kingman Reef is a remnant of volcanic activity that occurred between 65 and 120 million years ago (Haggerty et al. 1982; USFWS 2011c) and has since become an incredibly rich ecosystem that provides habitat to rare, endangered or threatened, and otherwise valued species of fish, invertebrates (including coral), and marine wildlife (USFWS 2011c). Kingman Reef is only 3 ft above sea level at its highest point and is frequently awash, resulting in very little upland habitat with little to no vegetation. The emergent land consists largely of dead coral and mollusk shell rubble, possibly providing only resting habitat for seabirds (DOI 2013a).

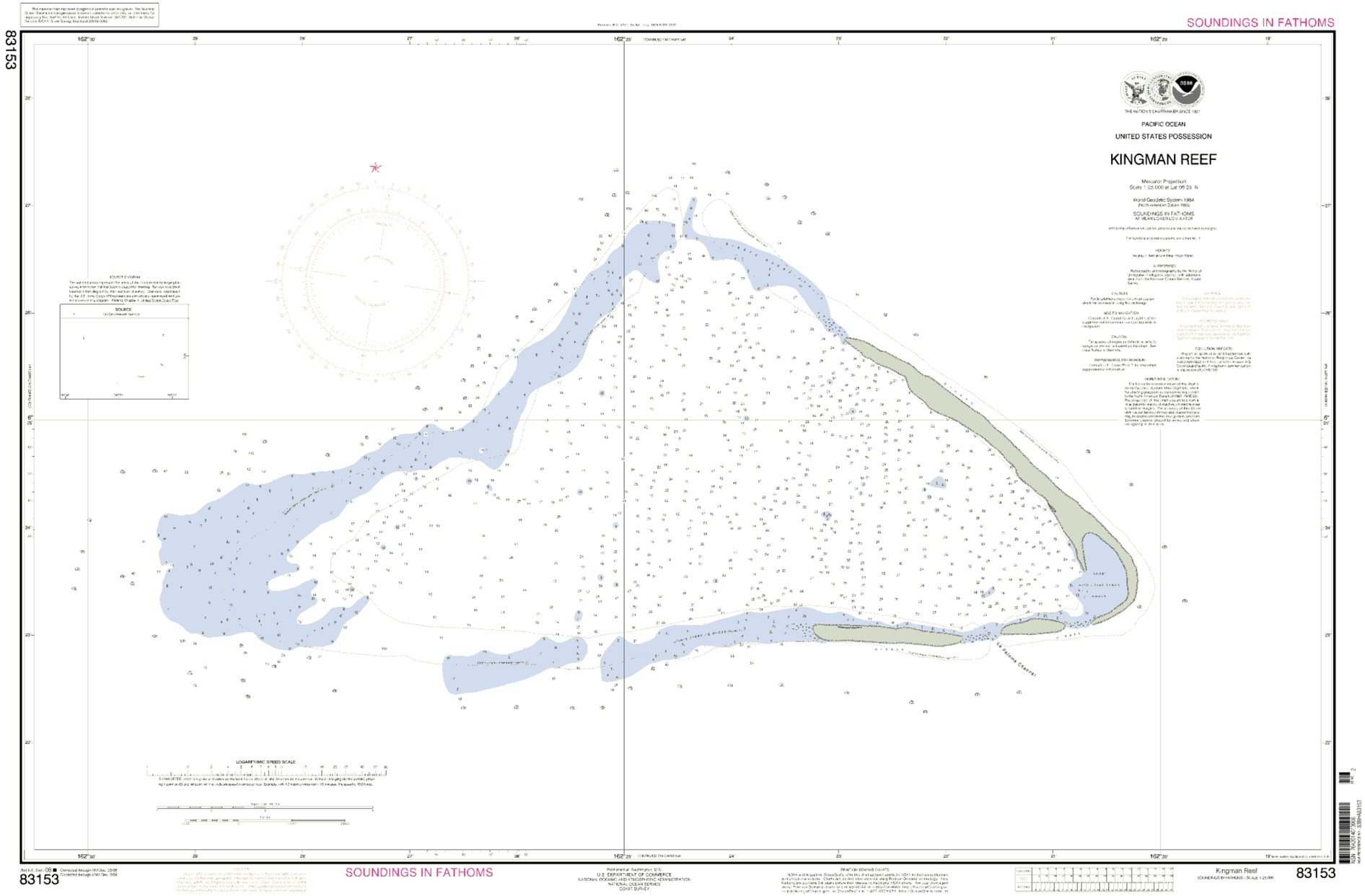

Source: NOAA (2008)

Figure 2. Map of Kingman Reef

Kingman Reef was first recorded by Captain Edmund Fanning in 1798 and later visited by the eponymous Captain W.E. Kingman in 1853 (USFWS 2011d). It was annexed to the US in 1922 by Lorrin Thurston, and jurisdiction over the reef was assumed by the US Navy in 1934 (DOI 2013a). Kingman Reef was used as a stopover by Pan American Airlines seaplanes transiting from Hawaii to American Samoa in 1937-1938 (DOI 2013a) and by naval vessels between 1934 and 1940 (DOI 2013a), prior to development at nearby Palmyra Atoll (USFWS 2011d). In 2000, control of Kingman Reef was transferred from the US Navy to USFWS, and in 2001, the Kingman Reef NWR was created. In 2009, the NWR was added to the Monument, although USFWS maintains jurisdiction over the NWR area within 12 nautical miles of mean low water as well as the 50-nautical-mile Monument boundary. To date, there is no other record of any human use of Kingman Reef apart from scientific research.

Kingman Reef supports one of the highest biological diversities among US coral reefs, with 173 known scleractinian coral species (Maragos et al. 2008; Williams et al. 2008) and 418 known species of reef fish (Maragos et al. 2008). The benthic community at Kingman Reef is primarily composed of crustose coralline algae (CCA) and fast-growing corals, particularly *Pocillopora* spp., *Acropora* spp., *Porites lobata, Montipora capitata,* and *Montipora efflorescens*. A badly burned unidentified teak fishing vessel ran aground on the northeastern side of the reef, perhaps in late 2007, although the date is uncertain. The approximate coordinates of the wreck are 6.405278 north, 162.350742 west. Based on the amount of scorched wood that was present, it is speculated that the vessel caught fire many miles from the reef and was then abandoned before drifting to its current location (Palmer 2008). The remains of the vessel and associated debris continue to impact the benthic community at Kingman Reef.

Salvage operations at Kingman Reef will focus on the removal of the remaining 20-ft hull, which is perched on the emergent coral rubble spit in a high-energy environment that is subject to ocean surf, and the collection of associated debris that is scattered along the fore reef, reef crest, and back reef lagoon areas. The debris consists of wood, fiberglass, and metal. Marine debris is one of the primary threats to reef environments inasmuch as it damages reefs through the physical impact of mobile debris and abrasion (Bruckner et al. 2005). The debris will be removed from the fore reef, reef crest, and rubble spit, and a search for remaining debris will occur up to 100 ft underwater within a radius of 2,100 ft into the back reef and lagoon environment.

The collection of debris will involve walking along a set route to identify debris and then removing the debris either by hand or with a low-ground-pressure lifting vehicle (LGPLV). Thus, the principal impact during salvage operations will be the compaction of CCA and some potential breakage or crushing of small coral during debris collection along the spit and in the shallow water of the reef. Because many of the dominant coral species within the removal area at Kingman Reef are fast-growing species that are capable of reproducing via fragmentation, the impact of debris

removal is not expected to result in high levels of coral mortality. The release of petroleum products or other pollutants that would adversely impact the affected environment is not expected during the salvage operation at Kingman Reef. All salvage actions will be limited to the proposed action area; however, it is possible that vessels may be required to anchor in 20 ft of sea water.

1.2.2 Palmyra Atoll

Palmyra Atoll is an equatorial incorporated, unorganized territory of the United States and is located in the northern Line Islands, approximately 960 nautical miles south of Hawaii (USFWS 2011a). The atoll consists of 250 ha of emergent land on 25 lushly vegetated small islands surrounded by and enclosing approximately 6,300 ha of coral reef and lagoon habitat (USGS 2012). Palmyra Atoll's relatively pristine reef environment supports approximately 176 known species of scleractinian coral, with the highest levels of coral species diversity of any surveyed area in the Phoenix and Line Islands (USGS 2012; DOI 2013a; Maragos et al. 2008). Live coral, CCA, and rubble dominate the benthos at Palmyra Atoll, which has a greater proportion of CCA and less live coral than does Kingman Reef (Brainard et al. 2005).The lagoon and reefs of Palmyra Atoll are used as a foraging area by the green turtle (*Chelonia mydas*) and hawksbill turtle (*Eretmochelys imbricata*); several species of marine mammals frequent deeper waters (> 50 ft) offshore. Palmyra supports 24 species of International Union for Conservation of Nature (IUCN)-listed species, representing the second greatest number across the US Pacific, including the bumphead parrotfish (*Bolbometopon muricatum)* and humphead wrasse *(Cheilinus undulates)*, both of which are NOAA Species of Concern (Zgliczynski et al. 2013).

Similar to Kingman Reef, Palmyra Atoll was formed through volcanic activity that occurred between 65 and 120 million years ago and has since become a rich ecosystem that provides habitat to rare, endangered or threatened, and otherwise valued species of plants, fish, invertebrates (including corals), marine wildlife, and birds (USFWS 2011c). Palmyra Atoll has sufficient upland area to serve as important nesting or overwintering habitats for many bird species, such as various booby species, black noddy (*Anous minutus*), great frigatebird (*Fregata minor*), golden plover (*Pluvialis fulva*), and bristle-thighed curlew (*Numenius tahitiensis*) (USFWS 2011c). Upland area vegetation includes rare *Pisonia* forest (mostly *P. grandis*) and invasive coconut palm (*Cocos nucifera*) (USGS 2012). Invasive species have historically been problematic in the uplands, and a comprehensive and successful eradication of black rats (*Rattus rattus*) was undertaken in 2011 (USFWS 2011a).

First sighted in 1798 and then officially discovered in 1802, Palmyra Atoll has traded hands many times since its discovery. In 1912, Palmyra Atoll was claimed for the US. (DOI 2013b) During World War II, the US military occupied Palmyra Atoll; the largest islet, Cooper Island, was the center of military activity during that time (USGS 2012) and supported a population of 6,000 military personnel, a US naval dock, and two

airfields. It was during this time that the atoll, which originally consisted of 54 small islets, was greatly altered to accommodate naval facilities (e.g., airstrips, defensive structures, causeways), and the islands were joined to become a single, large, horseshoe-shaped island (USFWS 2011a). Over time, erosion has resulted in the fragmentation of the single island into 25 smaller islets (Figure 3). A research station, camp, and airstrip are all currently in operation on Cooper Island.[1]

[1] For additional information on the complex history of Palmyra Atoll, refer to DOI (2013b).

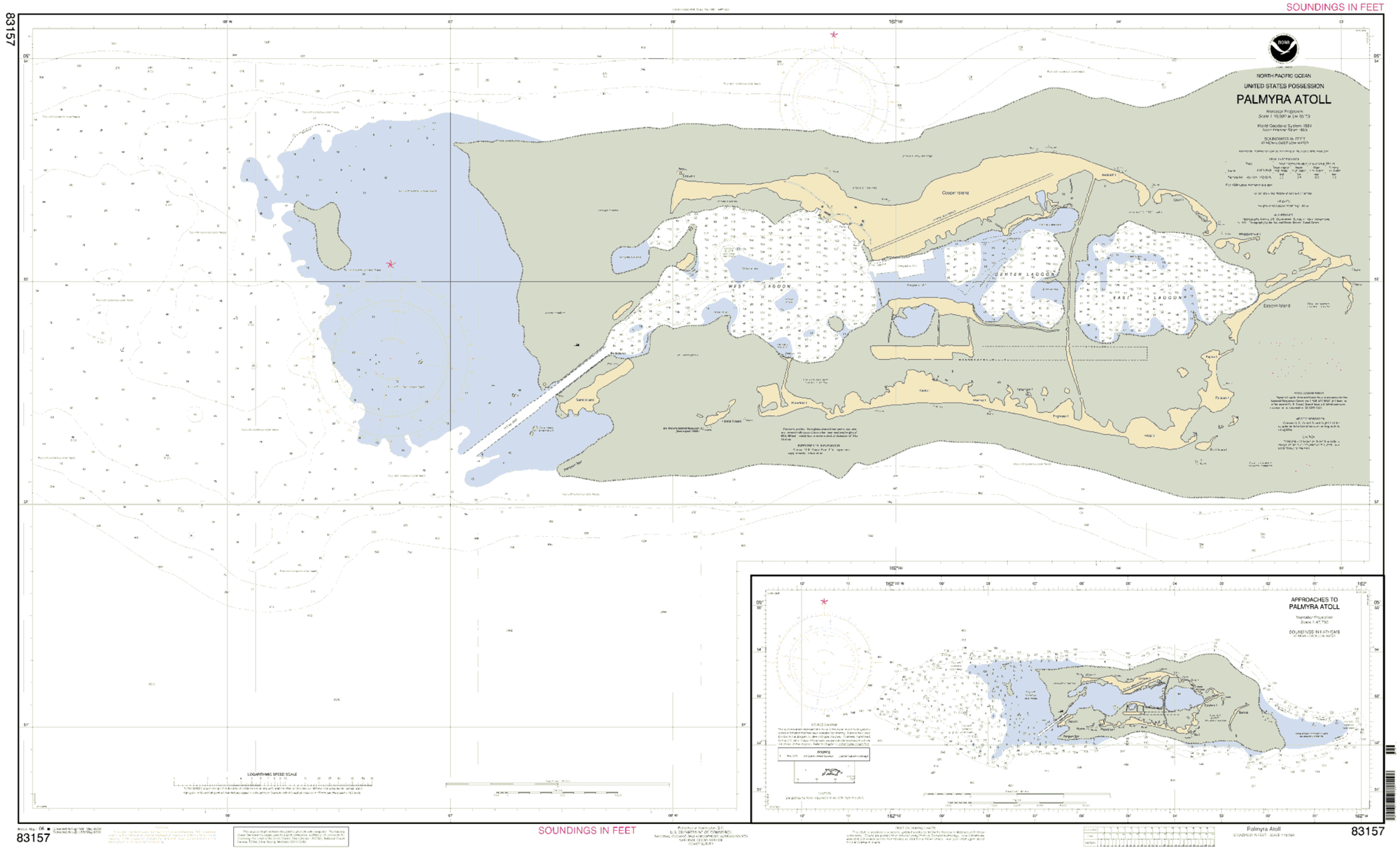

Source: NOAA (2008)

Figure 3. Map of Palmyra Atoll

In 2000, The Nature Conservancy (TNC) of Hawaii purchased the land; and in January 2001, Palmyra Atoll and surrounding area out to 12 nautical miles was established as an NWR, placing the area under the jurisdiction of the USFWS. The atoll was added to the Monument in 2009. USFWS also consults with NOAA (and NMFS) on managing the Monument. Currently, TNC and the USFWS own and manage the land and waters of the Palmyra Atoll NWR and oversee the research done by the Palmyra Atoll Research Consortium, which has conducted scientific research within the NWR since 2004 (USGS 2012).

There are two proposed action areas at Palmyra Atoll near the western edge of emergent coral and the previously dredged channel that leads into the protected lagoons south of Cooper Island. Both areas have abundant submerged and emergent coral heads and receive very little sediment from the surrounding areas (Collen et al. 2009). The first proposed action area is the site of the sunken *Fishing Vessel* (*F/V) Hui Feng No. 1*, which is located at approximately 5.877222 north and 162.118889 west, approximately 2,300 ft from the channel that leads into the western lagoon. The vessel went aground northwest of the channel in 1991. It was reported that when the vessel went aground, approximately 1,500 gallons of diesel and oily bilge waste were spilled, and most of the diesel that could have been onboard (roughly 27,000 gal.) was lost (IncidentNews 2013). The US Coast Guard (USCG) Pacific Strike Team was called upon to assess the ship and remove excess waste; it was their conclusion that the sunken vessel posed little threat of further chemical release (IncidentNews 2013). However, recent research within the proposed action area has identified adverse impacts that have likely been caused by the *F/V Hui Feng No. 1,* likely as a result of iron leaching from the ship's structural elements and ground tackle (e.g., anchor) (Work et al. 2008).

The second proposed action area is northwest of the dredged channel that leads into the western lagoon, approximately 473 ft from the edge of the channel and within the area of emergent coral at the western edge of Palmyra Atoll. This is the site of a small World War II-era pontoon vessel that sank at an unknown date, but likely during US Navy operations in the 1940s. The pontoon vessel, later named *Rust Island,* and debris from the vessel is located at approximately 5.878535 north, 162.107199 west. As its name suggests, the sunken vessel has deteriorated and rusted significantly and has become somewhat covered with coarse-grained sediment at the base and on the surface, so much so that coconut trees have begun growing on the vessel. The deteriorated state of the vessel as well as the fact that the area does not receive much sediment from the surrounding area (Collen et al. 2009), lends to the belief that the vessel has been present at this location for some time. It is not clear whether *Rust Island* has had any significant effects on the surrounding ecosystem, but it is an un-natural feature with no wildlife conservation benefit; for that reason, USFWS has requested that the vessel be removed concurrent with the removal of *F/V Hui Feng No. 1*.

Palmyra Atoll is located within waters of the United States, thus compliance with CWA is required. As such, every effort will be made to avoid impact to the surrounding environment from petroleum or suspended sediment. Best management practices (BMPs), such as "hot tapping" fuel tanks[2] and using emergency spill kits (which will be on hand for deployment in case of a release) will avoid and/or mitigate any potential impacts related to a chemical release. The physical presence of the sunken vessel has significantly altered the surrounding environment. Even though the salvage operation would have short-term impacts in the proposed action area, the elimination of the metal-hulled vessel is expected to have an overall positive benefit on the reef environment by removing the primary source of iron enrichment in the area. In addition, the removal of both vessels would eliminate the future risk of physical damage to Palmyra Atoll's reefs. Finally, the removal of the vessels would facilitate development and implementation of a management plan for *R. howesii.*

1.3 THREATENED, ENDANGERED, OR OTHERWISE PROTECTED SPECIES

This section identifies federally protected species that have at some point been documented (either visually or aurally) at Palmyra Atoll and/or Kingman Reef NWRs. There are other species of conservation concern whose distribution may overlap with the proposed action areas; these species are listed in Appendix A.

Of all the species documented at Kingman Reef and/or Palmyra Atoll, only three are federally listed as threatened or endangered and therefore protected by ESA:[3]

- Green sea turtle (*C. mydas*)
- Hawksbill turtle (*E. imbricata*)
- Hawaiian monk seal (*M. schauinslandi*)[4]

Species that have been documented at Kingman Reef and/or Palmyra Atoll NWRs and are not protected under ESA but protected under MMPA include:

- Melon-headed whale (*Peponocephala electra*)
- Common bottlenose dolphin (*Tursiops truncatus*)

---

[2] To safely access fuel or oils trapped with submerged vessels salvors use a technique called "hot tapping". Hot tapping (or pressure tapping) is a method by which a connection to an existing pipe or vessel (in this case, a fuel tank) is made without emptying the vessel. When a pipe or tank is hot tapped a number of valves are placed in strategic locations where fuel will collect and can then be pumped or displaced through a pipe into the receiving vessel. The procedure maintains the internal pressure of the tank while the tap is created, resulting in no net loss of product to the surrounding environment.

[3] Of the 82 species of coral proposed for listing under ESA, at least 15 are known to be present at Palmyra Atoll and are expected to be present at Kingman Reef. In addition, green bumphead parrotfish (*Bobometopon muricatum*) and humphead or Napoleon wrasse (*Cheilinus undulatus*) are candidate species or species of concern.

[4] Hawaiian monk seal (*M. schauinslandi*) is also protected under MMPA.

- False killer whale, Palmyra Atoll stock (*Pseudorca crassidens*)
- Short-finned pilot whale (*Globicephala macrorhynchus*)
- Beaked whales[5] (*Mesoplodon* sp.)
- Gray's spinner dolphin (*Stenella longirostris*)

It has been noted that melon-headed whale and common bottlenose dolphins are commonly observed at Palmyra Atoll, whereas other species are very rarely observed (Meyer 2013c).

2 Purpose of the Preferred Action Alternative

The purpose of the Preferred Action alternative sub-actions at both Kingman Reef and Palmyra Atoll is to restore and protect the coral reef ecosystems of the Kingman Reef and Palmyra Atoll NWRs by permanently removing three sunken vessels and their associated debris in a manner that minimizes harm to the ecosystem while maintaining a high probability of success.

Physical abrasion and biological changes at Kingman Reef that have resulted from the grounding of the unidentified teak fishing vessel have been previously documented (Kelly et al. 2012). Leaching iron from debris has been linked to the proliferation of a non-native, invasive macroalga, resulting in a community-level shift away from hard coral and CCA species.

Iron leached from *F/V Hui Feng No. 1* has been linked to alterations in the hard coral community at Palmyra Atoll (Kelly et al. 2012; Work et al. 2008; Norström et al. 2009). *Rust Island* has not specifically been assessed for impacts, but the sunken vessel has the potential to cause physical or biogeochemical impacts similar to those associated with the sunken *F/V Hui Feng No. 1*.

In addition to removing the source of iron that is causing a community-level shift, the removal of the sunken vessels would also expose benthic substrate for recolonization and recruitment by coral and other reef-building organisms.

3 Need for the Preferred Action Alternative

The coral habitat at the Kingman Reef NWR has been described as "pristine" (MCBI 2008; USFWS 2011d), and the habitat at the Palmyra Atoll NWR has been said to "constitute a wildlife habitat with significant conservation value" (Collen et al. 2009). Both refuges support communities of marine fish and invertebrates (e.g., corals) that are among the most diverse in the Pacific Ocean (USFWS 2011c; Zgliczynski et al.

[5] A new species or subspecies of beaked whale was recently identified at Palmyra Atoll as *Mesoplodon hotaula* or *M. ginkgodens hotaula*; the species is protected under MMPA and regulated by NMFS.

2013). The high level of marine biodiversity at the Palmyra Atoll reef and Kingman Reef NWRs, particularly of coral species, is attributed to the influence of the North Equatorial Countercurrent and other nearby ocean currents, which may act as a transport mechanism, distributing coral larvae from the center of coral diversity in the western Pacific region to the atolls (Brainard et al. 2005). The Palmyra Atoll and Kingman Reef NWRs both have significantly higher coral recruitment and lower coral disease than do other communities in the Phoenix or Line Island chains, particularly those with increased anthropogenic stresses (Sandin et al. 2008; Dinsdale et al. 2008).

Although Kingman Reef and the reefs surrounding Palmyra Atoll are highly productive and relatively undisturbed, there are a number of potential stressors in the vicinity of the proposed action areas that are associated with the three sunken vessels. The purpose of this section is to identify those stressors and potential impacts in order to assess the Preferred Action alternative sub-actions in the proper environmental context.

3.1 BASELINE CONDITION: KINGMAN REEF

The shallow surf zone in the proposed action area within the Kingman Reef NWR is largely composed of dead material, shells, and coral skeletal fragments (USFWS 2011c). The benthic community at the Kingman Reef NWR primarily consists of live coral, CCA, hard bottom, and rubble (e.g., clam shells) (Miller et al. 2008). Other minor components of the benthos include sand, marine algae, and dead coral. Kingman Reef supports 173 species of scleractinian corals and 297 species of reef fishes (Maragos et al. 2008); the fish community is characterized by an inverted biomass pyramid that is dominated by apex predators, mainly shark species (Sandin et al. 2008). Kingman Reef is exposed to a relatively high-energy environment (as compared with that of Palmyra Atoll). Prevailing currents and wind have shaped the reef over time, eroding much of the volcanic island, such that the majority of the landmass and coral community are now submerged (MCBI 2008). Because Kingman Reef is largely submerged and not clearly visible, vessel groundings in the NWR are a major threat (MCBI 2008). This has been so much of a problem historically that Kingman Reef was identified on some early maps as "Danger Rock" (DOI 2013a). The grounding of the unidentified fishing vessel at Kingman Reef is but one example of this continuing threat.

The grounding of the fishing vessel at Kingman Reef has resulted in notable physical disturbance in the surrounding area, and additional physical damage from the associated scattered debris is possible. It appears that over time, the vessel has been moved by severe weather events (Kelly et al. 2012). If no action were taken to remove the sunken vessel, it would likely continue to move and could cause additional abrasion or breakage of live coral.

The presence of the sunken vessel also appears to be altering the biological community in the surrounding area (Kelly et al. 2012). Much of the machinery that was originally contained within the vessel is now dispersed across the reef as iron-rich debris. Iron is

a limiting nutrient in shallow, Pacific coral-dominated systems such as that present at Kingman Reef (Kelly et al. 2012).The area in the vicinity of the shipwreck has been overrun by a filamentous green macroalga (*D. tenuissima*), suggesting a bottom-up community shift that is commonly associated with the introduction of iron into an iron-limited marine system. The dominance of the macroalga attenuates with distance from the wreck, and coral species and CCA are increasingly abundant with distance; these spatial trends strongly indicate that the vessel is the source of the community-level shift away from coral dominance. The overgrowth of corals and other benthic organisms by *D. tenuissima* to a depth of approximately 35 m has been noted (Kelly et al. 2012). It is also possible that the explosive growth of *D. tenuissima*, a species not found at the Kingman Reef NWR prior to 2007, is due to the introduction of the non-native alga by the vessel upon grounding at the reef. Another biological stressor on the coral community at Kingman Reef is the corallivorous crown-of-thorns sea star (*Acanthaster planci*), of which an outbreak was recorded between 2000 and 2004 (Timmers et al. 2012). Timmers et al. (2012) noted that outbreaks of *A. planci* appeared to be related to nutrient inputs that fuel algal growth. It is assumed that the introduction of non-native algae, the outbreak of the native sea star, and the availability of aqueous iron are all stressors on the Kingman Reef coral community, and the aggressive growth of problematic organisms is driven by the aqueous iron that is leaching from the sunken vessel and associated debris. Currently, *A. planci* is not as problematic or widespread as was observed between 2000 and 2004 (Meyer 2013b).

The degradation of coral reef habitat is known to have a lasting impact on fish assemblages. Garpe et al. (2006) observed significant shifts in multiple community structural parameters, including species abundance and taxa richness, as well as functional feeding guild abundances (e.g., the abundance of herbivorous fish species increased dramatically due to the increase in algal growth after a major coral bleaching mortality event off the coast of Tanzania). Similarly, Bellwood et al. (2006) observed a community structural shift to herbivore and generalist omnivore species that are less dependent on coral. Garpe et al. (2006) noted that fish abundance appeared to be enhanced in the short term but ultimately decreased over a long period of time (i.e., 6 years relative to 6 months), likely due to the reduction of necessary habitat complexity after coral mortality and the erosion of dead coral. Erosion is not immediate and may not influence habitat complexity in the short term, which explains why adverse impacts are not noted in the time span of less than 1 year.

This relationship between habitat complexity and fish assemblage abundance, richness, and biomass has been corroborated by Chong-Seng et al. (2012), Friedlander et al. (2003), and Syms and Jones (2000). Those fish species that are strongly associated with coral are most significantly impacted (Garpe et al. 2006; Jones et al. 2004). Furthermore, it has been shown that such impacts on fish occur regardless of whether

they are within protected areas; impacts are directly linked to the stability and complexity of the coral community (Jones et al. 2004).

Any significant impacts on fish abundance are expected to result in a reduction of the biomass available to predatory marine mammals. Thus, any degradation of coral habitat over time would be expected to result in indirect impacts on marine mammals. The extent to which impacts on mammals are directly related to coral habitat degradation is uncertain and has not been previously quantified. It has been predicted that long-term fish harvest will result in diminished marine mammal populations worldwide (DeMaster et al. 2001), so it is reasonable to assume that local impacts on fish populations will similarly reduce the foraging capacity of an area for marine mammals. Because there are no major fisheries in the vicinity of the proposed action area at Kingman Reef, significant indirect impacts to marine mammals associated with fishing activities are unlikely. The reef system at Kingman Reef is currently among the most pristine and productive in the world, so known effects associated with the baseline condition are largely limited to the area immediately impacted by the sunken vessel.

In general, marine turtles are threatened by the presence of debris in forage habitat, because debris may be incidentally ingested or can pose an entanglement hazard leading to drowning (NOAA Fisheries 2011). Although the debris from the sunken vessel at Kingman Reef is typically large (e.g., wooden planks, fiberglass fish hold), smaller fragments could be ingested by and potentially harm sea turtles. Juvenile green sea turtles are omnivorous and often feed at shallow depths on snails, ctenophores, and vegetation (Bjorndal 1997) and thus could accidentally ingest debris while foraging. Adult green sea turtles graze selectively on marine vegetation (although they may consume some animal matter) (Bjorndal 1997) and so are less likely to ingest non-specific debris. As adults, hawksbill sea turtles feed primarily on sponges, but juveniles consume woody plant remains, whole barnacles, fish eggs, tunicate, crab larvae, and algae (Bjorndal 1997). NMFS and USFWS (1998) noted that marine debris (in addition to environmental contamination) poses only a minor threat to species at Kingman Reef and Palmyra Atoll. However, the threat cannot be completely dismissed given the non-specific feeding habit of these species. Furthermore, it has been reported (Richardson et al. 1990) that turtles associate with marine debris because it provides some sort of protective cover from predators; this behavior has been specifically linked to buoyant flotsam (e.g., plastic containers, dead animals, coconuts), of which there is little or none at the Kingman Reef proposed action area. The majority of observed debris is submerged on the reef or washed up on the reef crest and emergent spit.

Other potential baseline impacts to green sea turtles (USFWS 1987) include development; beach erosion; beach mining; seagrass, reef, and algal forage habitat degradation; natural disasters; environmental contaminants; and fisheries-related impacts. None of these are particularly prevalent within the proposed action areas at

Kingman Reef (or Palmyra Atoll) because most are not allowed within the NWR. Thus, these potential impacts are not consistent with the environmental baseline condition at these locations. Based on the current environmental condition of the Kingman Reef (as well as Palmyra Atoll), natural disasters and reef degradation (and environmental contamination to a limited extent) are the most likely stressors of marine turtle species (as well as marine mammals, fish, and invertebrates, including coral) present in the proposed action area(s). Currently, there is no human presence at Kingman Reef, except for an occasional use for research purposes. Temporary access to the NWR is restricted through the use of permits, which are issued by the USFWS. Thus, baseline impacts associated with human activity (including fishing, whaling, and any substantial amount of pollution) on species present Kingman Reef are minimal.

3.2 BASELINE CONDITION: PALMYRA ATOLL

The coral flats that surround Palmyra Atoll support a reef environment that is more diverse than those at other Line Islands (USGS 2012). In addition, the atoll's reefs have a lower prevalence of coral disease than do the other US remote island territories, with the exception of Kingman Reef (Miller et al. 2008). Two species of marine turtles, the green sea turtle (*C. mydas*) and hawksbill sea turtle (*E. imbricata*), both of which are ESA-listed, forage on *Caulerpa* and *Chlorophyta* algae in the shallow nearshore waters and lagoons of Palmyra Atoll. Almost 20 genera of algae have been observed at Palmyra Atoll (USFWS 2011a). The surrounding coral reefs support approximately 173 species of scleractinian corals and 297 species of reef fishes (Maragos et al. 2008; Kenyon et al. 2010; Williams et al. 2008). *Pocillopora, Porites, Acropora, Montipora,* and *Pavona* are the most abundant genera of coral at Palmyra Atoll. Approximately 15 of these species are currently under consideration for inclusion on the threatened or endangered species lists.

Other marine invertebrates include giant clams (*Tridacna squamosa, T. maxima)*, anemones, sea urchins, sea stars, sea cucumbers, pearl oysters, conch, octopuses, hermit crabs, lobsters, and large crabs (Brainard et al. 2005), although giant clams are not abundant in the waters of Palmyra Atoll (NMFS 2004).

Cetaceans frequent the waters of Palmyra Atoll, but they do not enter the lagoons or forage in the nearshore shallow waters (Meyer 2013a). The ESA-listed Hawaiian monk seal (*M. schauinslandi)* was reportedly sighted at Palmyra Atoll decades ago, although Palmyra Atoll is not within their usual range (USFWS 2011a). All marine mammals are federally protected under the MMPA. Other species that are potentially present at Palmyra Atoll are listed in Appendix A.

Threats to the Palmyra Atoll reefs include climate change; ocean acidification; marine debris; tropical storms; invasive species, including the corallimorph, *R. howesii*; and physical damage resulting from the two vessels (i.e., *F/V Hui Feng No. 1* and *Rust Island*) that are currently shipwrecked on the reef. Currently, the principal concern at

Palmyra Atoll is the rapid expansion and dominance of corallimorph species, particularly *Rhodactis howesii*, over the predominantly hard coral community (Work et al. 2008). It has been estimated that as of 2007, 100 ha of the reef had been overrun by *R. howesii* (Work et al. 2008). Corallimorph have overgrown benthic organisms around the *F/V Hui Feng No. 1* and now occupy over 2 km^2 at Palmyra Atoll, although the density of corallimorph decreases with distance from the shipwreck (USFWS 2011a). Consistent with other research in the South Pacific, the loss of live coral cover at Palmyra Atoll has been associated with a decline of fish species richness (Chong-Seng et al. 2012; Williams et al. 2012).

Corallimorph species outcompete many other coral species in at least two ways. First, they have elongated marginal tentacles that can be used to kill nearby coral (Chadwick and Adams 1991; Langmead and Chadwick-Furman 1999; Williams 1991). Second, they have multiple modes of reproduction, allowing for relatively rapid and successful propagation under a variety of conditions (Chadwick-Furman and Spiegel 2000). The shift from hard corals to corallimorph species is expected to result in direct negative impacts on fish and marine turtles, as well as indirect negative impacts on marine mammals.

Additional stressors at Palmyra Atoll are associated with the temporary presence of researchers. According to USFWS (Meyer 2013a), vessels often transit the western lagoon area (Figure 3) in order to conduct research on the reefs beyond the lagoon. These vessels are small (16 ft) Carolina skiffs with 20- to 60- horsepower, four-stroke outboard engines, which introduce some noise pollution into the marine environment. Noise pollution is known to significantly alter the behavior of marine mammals, which often use and respond to underwater communication or echolocation (Weilgart 2007). Fish species are also affected, inasmuch as they have been reported to respond to environmental noise from outboard motors (Sara et al. 2007; Scholik and Yan 2002). Alterations in behavior have been linked to strandings in whale species (Weilgart 2007) [6] and may result in suboptimal schooling behavior in fish (Sara et al. 2007), which could potentially result in reduced predator avoidance in the vicinity of Palmyra Atoll. It must be noted that whale strandings have been observed to follow extreme levels of noise such as those produced by naval submarine sonar, high-impact pile driving, or underwater explosions (Weilgart 2007); the levels of noise produced by four-stroke outboard engines is minimal by comparison.

In addition, vessel traffic poses a significant risk to coral and marine wildlife through physical contact or ship strikes. Ship strikes are a significant threat to marine mammal species (Carretta et al. 2013; Chadwick-Furman and Spiegel 2000) and are likely a

[6] Weilgart (2007) provided a review of impacts that result primarily from chronic noise interference from naval vessels (i.e., sonar). Impacts from such noise represent a worst-case scenario and are not likely to occur at Palmyra Atoll. Smaller vessels outfitted with outboard motors produce underwater noise pollution at Palmyra Atoll, which is expected to result in short-term, acute exposures to noise.

threat to sea turtles. Sea turtle species are known to use the dredged channel that leads to the western lagoon (Meyer 2013c), so research vessel traffic in this area could affect habitat use by these species. To decrease any impact on sea turtles, research vessels are restricted to speeds of less than 8 knots while in the channel. Marine mammals are not observed in areas with increased boat traffic, such as the dredged channel (Meyer 2013c, d, a), although the restriction on boating speed is assumed to protect marine mammals as well.

4 Alternatives

This section describes the proposed alternatives, which include a No Action alternative (Section 4.1), which would maintain the status quo, and a Preferred Action alternative (Section 4.2), which is intended to ameliorate known impacts on the reef systems that are associated with the baseline condition (as discussed in Section 3) (i.e., impacts related to the sunken vessels). The Preferred Action alternative consists of three connected sub-actions. Each sub-action (Sections 4.2.1 through 4.2.3) corresponds to a salvage operation that targets one of the three sunken vessels.

4.1 No Action Alternative

Under the No Action alternative, the shipwreck (i.e., the unidentified teak fishing vessel) and associated debris field at Kingman Reef and the two shipwrecks at Palmyra Atoll (i.e., *F/V Hui Feng No. 1* and *Rust Island)* would be left in place.

At Kingman Reef, the shipwreck debris is considered to be a primary threat because of its physical and chemical impacts on the surrounding reef. The wreckage is located in a high-energy environment and would continue to cause physical damage due to movement by wind and waves. Persistent physical impacts to reefs from shipwrecks reduce topographic complexity and the structure of reef fish and invertebrate communities (Bruckner et al. 2005). Iron released from the vessel has led to the expansion of invasive *D. tenuissima* and an associated phase shift away from hard coral and CCA (Kelly et al. 2012); if left in place, this expansion would continue, and the reef would be further degraded.

The *F/V Hui Feng No. 1* was shipwrecked at Palmyra Atoll in 1991, and since that time, the reef community in the area of the vessel has changed dramatically, shifting from a coral-dominated to a corallimorpharian-dominated ecosystem (Work et al. 2008). Iron-enrichment from the deteriorating vessel has supported the rapid expansion of *R. howesii* and subsequent phase shifts on the reef. In addition to the biogeochemical impact, the *F/V Hui Feng No. 1* wreck has had a negative physical impact on the existing reef community and structure.

The *Rust Island* vessel does not pose a known threat to the community at the Palmyra Atoll NWR, but its removal would allow for restoration of biological growth under the vessel. The vessel provides no conservation benefit.

Unlike shipwrecks in the Caribbean or Gulf of Mexico, the sunken vessels at Kingman Reef and Palmyra Atoll are on calcium carbonate coral reef platforms located in the iron-poor central Pacific region and as such do not serve as an important substrate for coral recruit settlement. Under the No Action alternative, these vessels would be left in place and continue to negatively impact the coral reef structure and community at Palmyra Atoll.

4.2 PREFERRED ACTION ALTERNATIVE

The Preferred Action alternative consists of the removal of all three vessels located at both Kingman Reef (i.e., the unidentified fishing vessel) and Palmyra Atoll (i.e., *F/V Hui Feng No. 1* and *Rust Island)* during three separate but connected salvage operations referred to as sub-actions. Salvage operations would begin at Kingman Reef in order to avoid transporting any corallimorph fragments from the Palmyra Atoll salvage sites to Kingman Reef. Thus, the order of salvage operations would proceed from the vessel at Kingman Reef to the *F/V Hui Feng No. 1* and then to *Rust Island*. Because the *F/V Hui Feng No. 1* and *Rust Island* are located in close proximity, it is possible that salvage work on those vessels could occur simultaneously. This section describes the salvage operation procedures at each proposed action area.

The locations of the vessels and water depths at both locations (i.e., Palmyra Atoll and Kingman Reef NWRs) present a number of challenges to vessel removal. Thus, BMPs would be implemented to avoid damage to the reefs during salvage operations:

- Specially designed shallow-draft transport vessels (SDTVs) would be used to provide transport between the shallow reef and barges (Figure 4).
- An LGPLV would be used to allow for the removal of debris from shallow water areas with minimal impact to coral (Figure 5).
- Underwater surveys would be used to identify appropriate access routes for the SDTVs.
- All salvage material would be recycled and/or disposed of properly within the continental US.
- An emergency spill response plan has been prepared, and a dedicated skiff with trained responders and appropriate spill response equipment would be ready and available for deployment onsite.
- Onsite capacity for restoration (e.g., trained coral expert with knowledge of restoration methods, necessary equipment) would be available in the event that coral are damaged and need to be reattached to the substrate or there is a need to salvage coral from marine debris (in the event that coral has colonized debris and is broken during debris salvage).

- In the event of inclement weather, operations would be suspended, and all equipment would be moved to protected lagoons and secured with appropriate mooring devices.

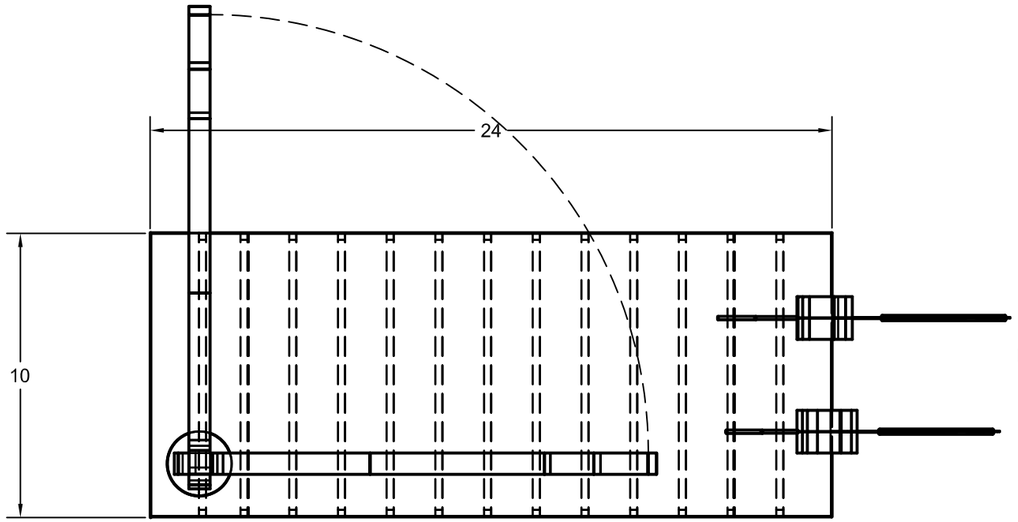

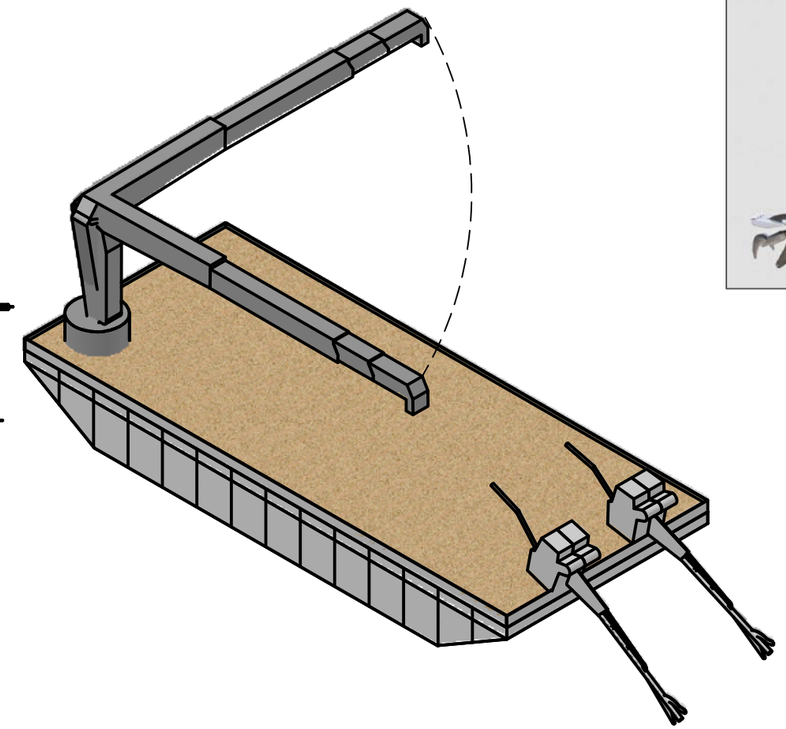

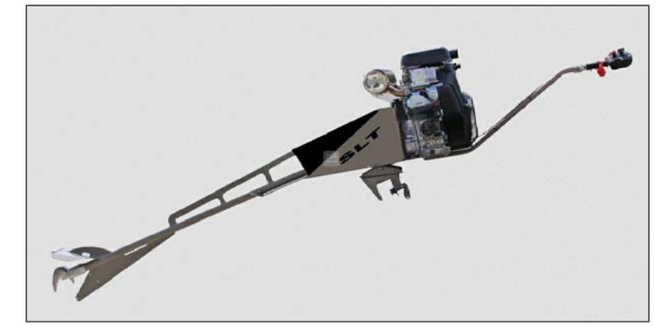

35 HP Long Tail Motor

HIAB 045-2 Light Crane

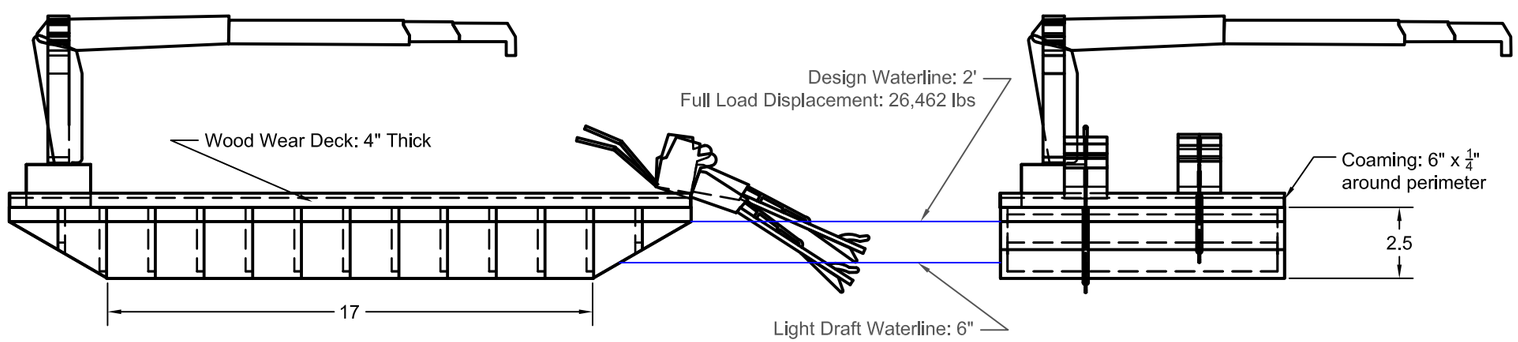

Hydrostatic Properties

Draft (ft)	Displacement Weight (lbs)	Cargo Weight (lbs)
0.500	5,755	0
0.750	8,866	2,466
1.000	12,118	5,718
1.250	15,509	9,109
1.500	19,035	12,635
1.750	22,685	16,285
2.000	26,462	20,062

Equipment in Work Mode

Type	Weight (lbs)
HIAB 045-2 Crane	1,671
Crane HPU	1,310
Cutting Spread	4,000
Dive Spread	4,000
(2) Longtail Motors	600

ALL UNITS IN FEET
(UNLESS NOTED)

DRAFT

GLOBAL
DIVING & SALVAGE, INC
3840 West Marginal Way S.W. Seattle, WA 98106
206 623 0621 FAX: 206 932 9036

DRAWN	DATE	FIGURE 4: SCHEMATIC OF SHALLOW-DRAFT TRANSPORT VESSEL
AL	08FEB13	
CHECKED	DATE	
APPROVED	DATE	

APPROVED BY LETTER DATED:
OWNER: A.B.S.: U.S.C.G.:

DWG NO.	SHEET	SIZE	SCALE:	REV
F12PS01171-PA-02	1 OF 1	B	3/16":1'	-

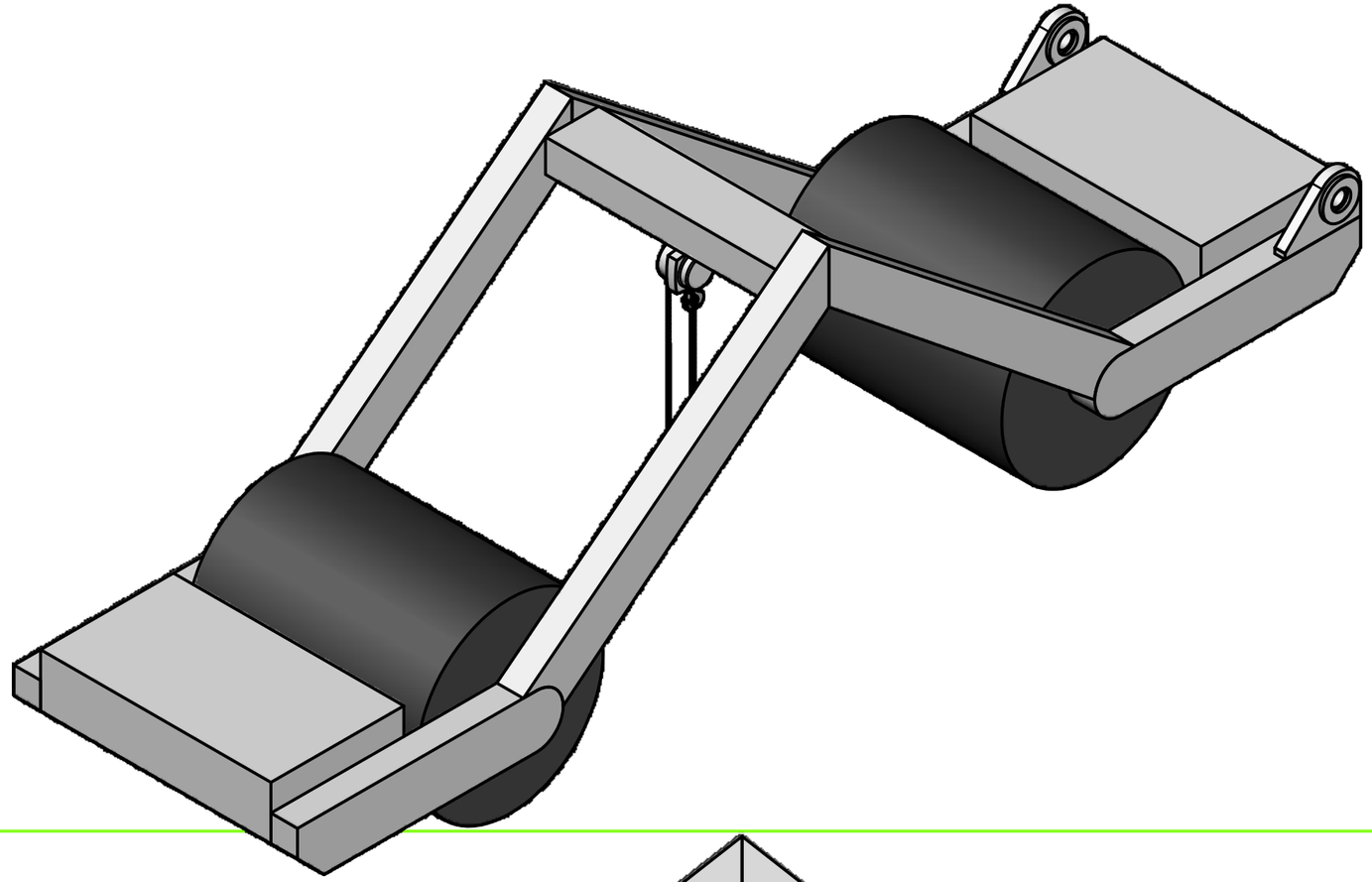

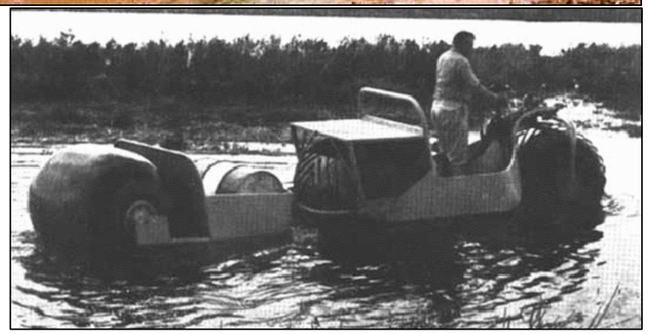

Rolligon Tires

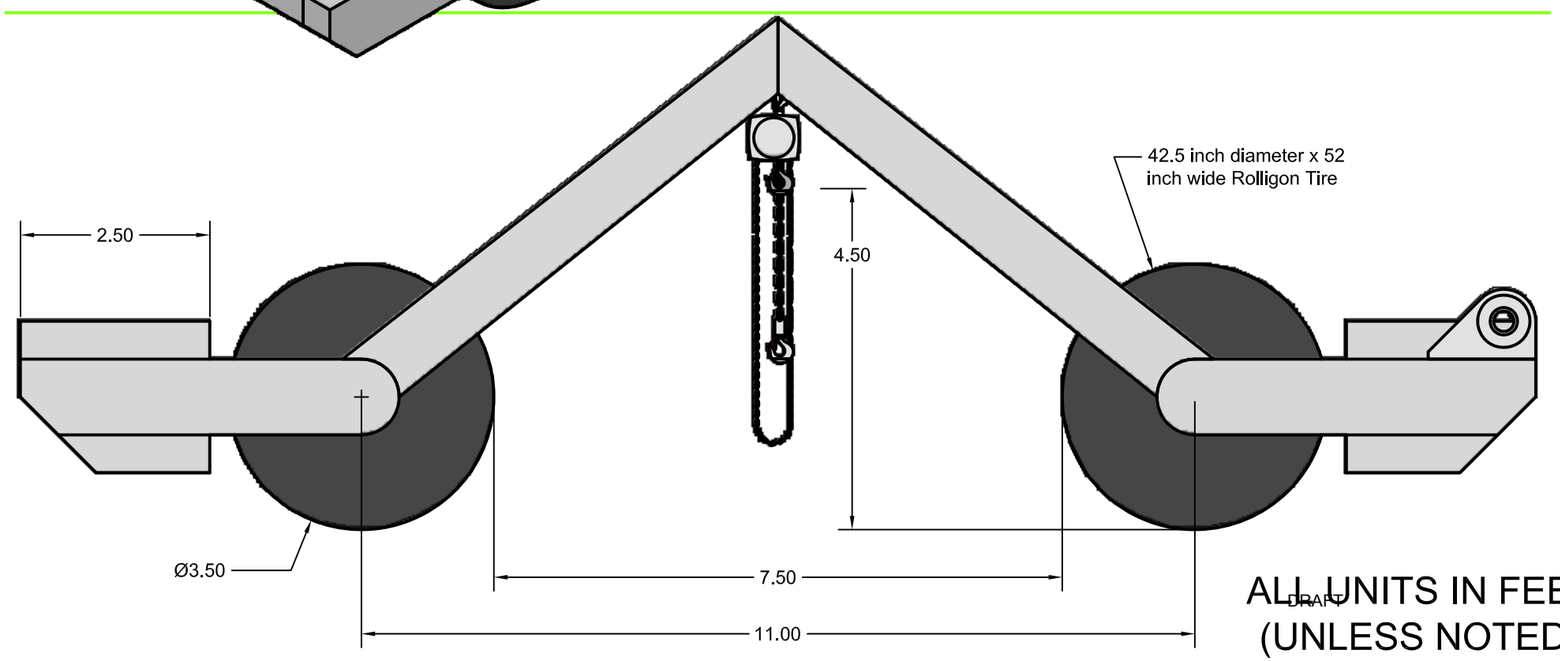

ALL UNITS IN FEET
(UNLESS NOTED)

DRAFT

GLOBAL
DIVING & SALVAGE, INC
3840 West Marginal Way S.W. Seattle, WA 98106
206 623 0621 FAX: 206 932 9036

DRAWN AL	DATE 11FEB13	FIGURE 5: SCHEMATIC OF LOW-GROUND-PRESSURE LIFTING VEHICLE
CHECKED	DATE	
APPROVED	DATE	APPROVED BY LETTER DATED: OWNER: A.B.S.: U.S.C.G.:

DWG NO.	SHEET	SIZE	SCALE:	REV
F12PS01171-PA-03	1 OF 1	B	1/2":1'	-

4.2.1 Sub-Action A – Kingman Reef fishing vessel salvage

Over time, the deterioration of the unidentified fishing vessel at Kingman Reef has resulted in a highly dispersed debris field. Approximately 20 ft of the vessel's remaining hull is perched on the emergent coral rubble spit; other parts of the wreck, including insulation, the fiberglass fish hold, the engine block, wood, and steel components, are scattered throughout the fore and back reef areas. During a brief fly-over of the proposed action area at Kingman Reef, it was noted that only the machinery, running gear, and heavier components of the refrigeration system were located in the vicinity of the original grounding (Global Diving & Salvage 2013). Figure 6 identifies the approximate location of the vessel in relation to the reef. Additional information is presented in Appendix C.

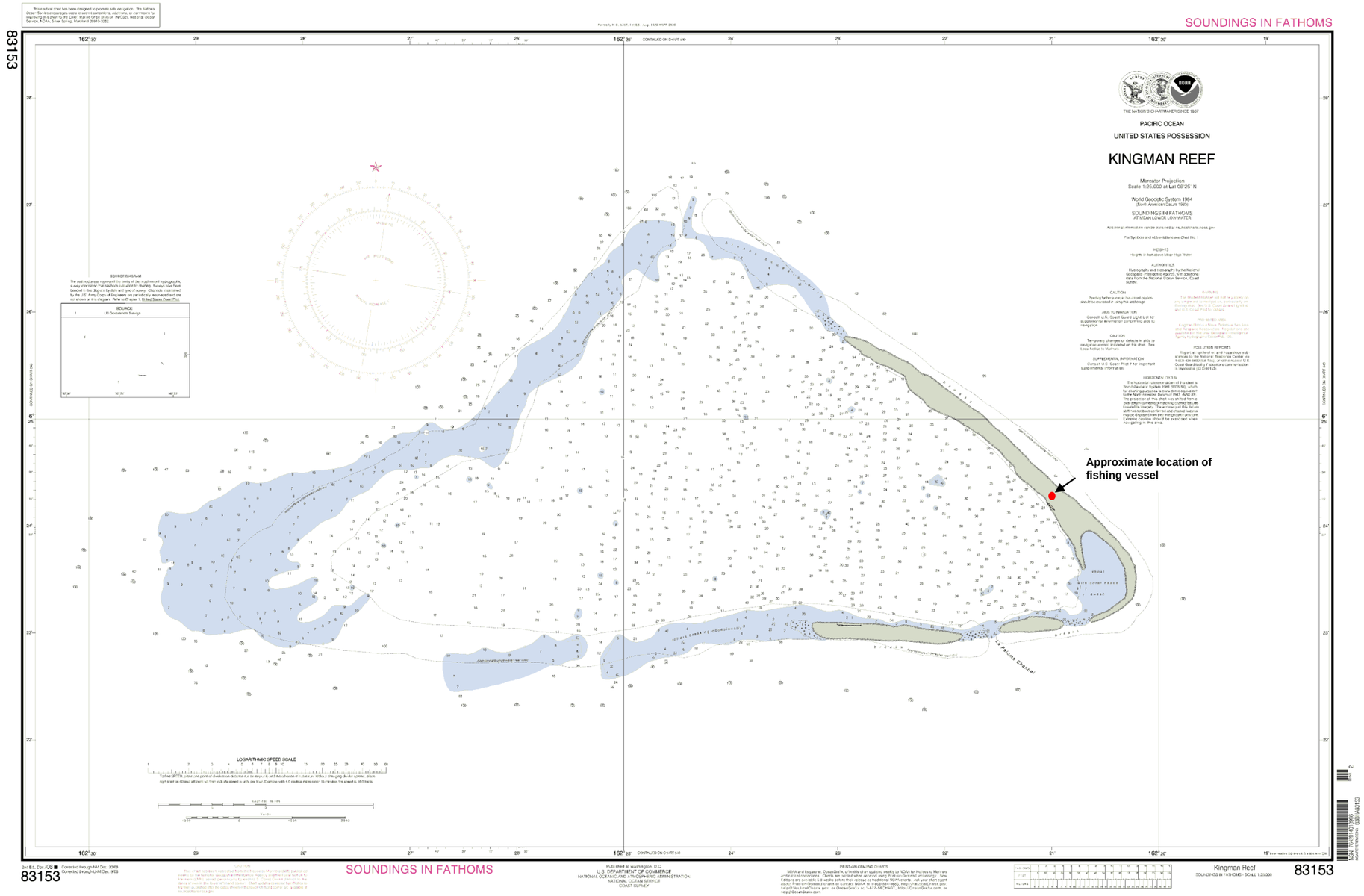

Source: NOAA (2008)

Figure 6. Location of the Kingman Reef fishing vessel

The general operating procedure for the removal of the wreck and debris at Kingman Reef would occur as follows:

1. The tugboat *Sarah C* would use a stern anchor to secure the barge 185-3 in the lagoon. The barge would feature an on-board crane that has a 140-ft radius.
2. The search area would be surveyed by foot on designated routes and, if necessary, with SDTVs. A global positional system (GPS) device and temporary buoys would be used to mark the locations of debris.
3. The barge would slowly be moved close to the spit into approximately 20 ft of water and then stabilized using either a land anchor or sea anchor, thus avoiding contact with coral inside the lagoon.
4. The barge's crane would be used to lift debris from the spit and submerged areas.
5. After the majority of the smaller debris had been removed, the LGPLV would be deployed to the spit to lift heavier debris.
6. If debris were located on the seaward side of the reef, it would be rigged onto the LGPLV by divers and hauled over the emergent spit and to the barge using a winch attached to the barge.
7. Divers equipped with metal detectors would make a final search for additional debris, within a 2,100-ft radius and up to 100 ft deep. [7]

4.2.2 Sub-Action B – *F/V Hui Feng No. 1* Salvage

The *F/V Hui Feng No. 1* is located in 20 ft mean lower low water (MLLW), northeast of the dredged channel at Palmyra Atoll (Figure 7). The vessel is 121 ft long, weighs 200 short tons, and is resting starboard side up. The technical approach to remove the *F/V Hui Feng No. 1* (Global Diving & Salvage 2013) would minimize the use of anchors and anchor lines to hold the elevated platform in place in order to avoid impacts to live coral in the vicinity of the proposed action area. All machinery on the vessel is expected to be in place and for the most part intact; the amount of petroleum that remains onboard the vessel is unknown. There is little sediment accumulation within the vessel; thus impacts related to suspended sediment would likely be minimal. The removal of the vessel would prevent further physical impact on the reef.

[7] Much of the debris on the lagoon side is in deeper water (30 to 60 ft). Searching for and collecting this material with require a substantial amount of time.

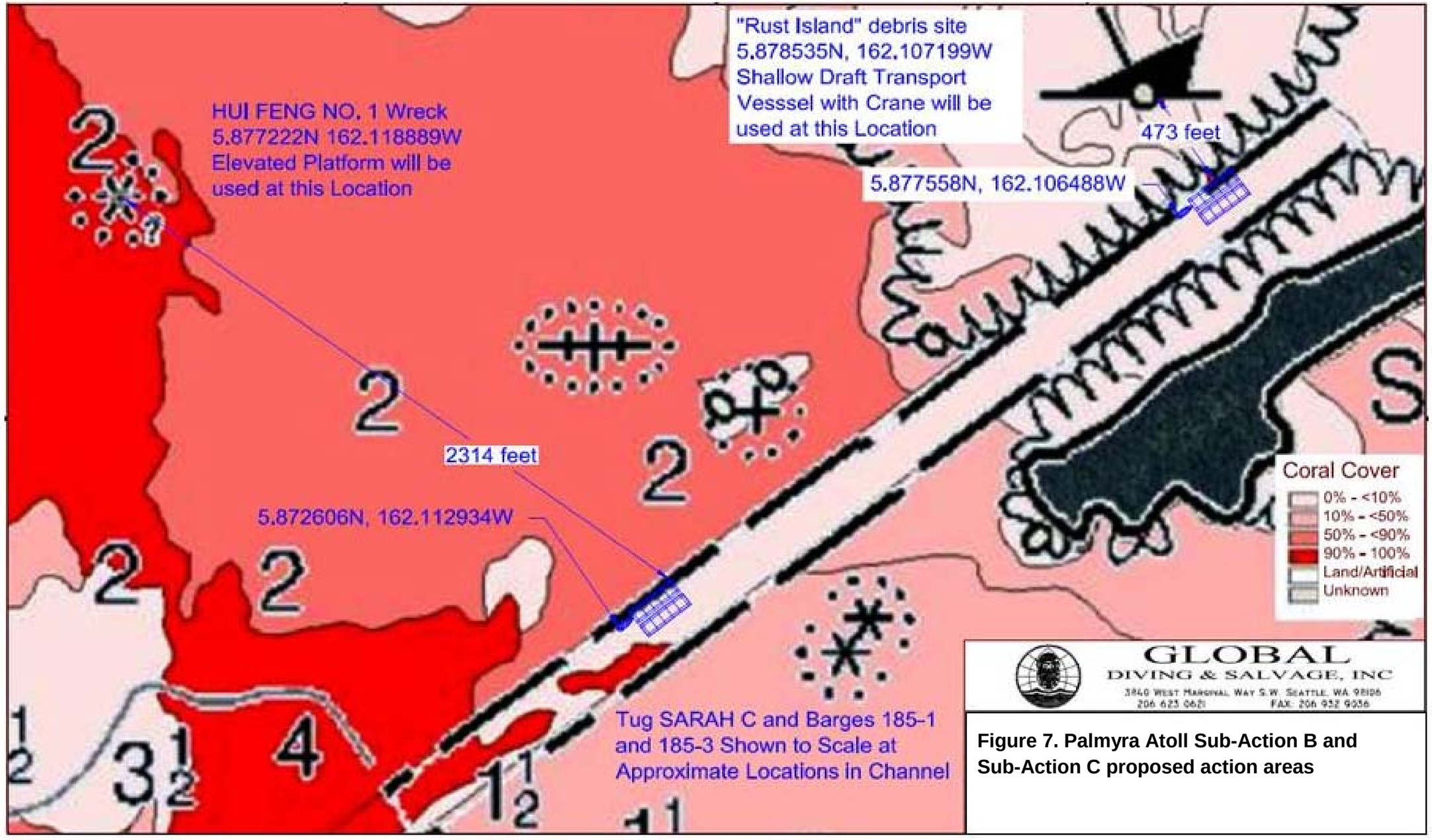

Figure 7. Palmyra Atoll Sub-Action B and Sub-Action C proposed action areas

The general operating procedure for the removal of the *F/V Hui Feng No. 1* would be as follows:

1. The tugboat *Sarah C* and barges 185-1 and 185-3 would be stationed in the dredged channel. A survey would be conducted by means of either snorkeling or scuba to guide anchor placement and avoid any impact to coral. The intent would be to anchor the barges in the already impacted channel.
2. A survey would be performed between the barges and the salvage site in order to identify any live coral that might be impacted by the elevated platform or transit routes. Surveyed transit routes would be marked with temporary buoys.
3. The 185-3 crane barge would launch the 40-ft x 20-ft elevated platform. The platform would be in a "light" configuration, with only the jacks, a single leg, and the crane on board.[8] Both SDTVs would move the platform to the work site at high tide. One leg of the platform would be deployed to the sea floor, and the platform would be temporarily moored to the wreck to hold its position. The remaining legs of the elevated platform would be loaded onto an SDTV and brought to the platform, loaded aboard the platform, and assembled using the platform's crane. The elevated platform would jack up to a height above the combination of high tide and surf (estimated to be 5 ft above low water). The SDTVs would bring the environmental protection, pollution response, underwater cutting, and dive gear to the platform.
4. Divers would assess the condition of the shipwreck and access the tank areas in order to determine the tank contents. If necessary, divers would "hot tap" the tanks and remove any remnant petroleum product prior to the salvage of the vessel. Per the emergency spill and response plan (Global Diving & Salvage 2013), pollution containment equipment would be available onsite and ready to deploy in the event of a petroleum product release.
5. Because refloating the *F/V Hui Feng No. 1* could further impact live coral, the vessel would be cut into approximately 22 sections and removed using a crane, which would place the sections on the SDTVs for transport to the barge anchored in the channel. Each SDTV can hold 10 short tons of material with only a 1.5-ft draft. The SDTVs would be powered by long-tail motors to minimize any potential physical impact to the reef. To the extent possible, exothermic cutting torches would be used to cut the vessel into sections; however mechanical saws and abrasive wheels could also be used when necessary. Exothermic torches would be preferable because they generate minimal sound underwater.
6. Upon completion of the vessel removal, divers equipped with metal detectors would conduct a search for any remaining debris.

[8] The designed floating draft using this configuration is 4 ft.

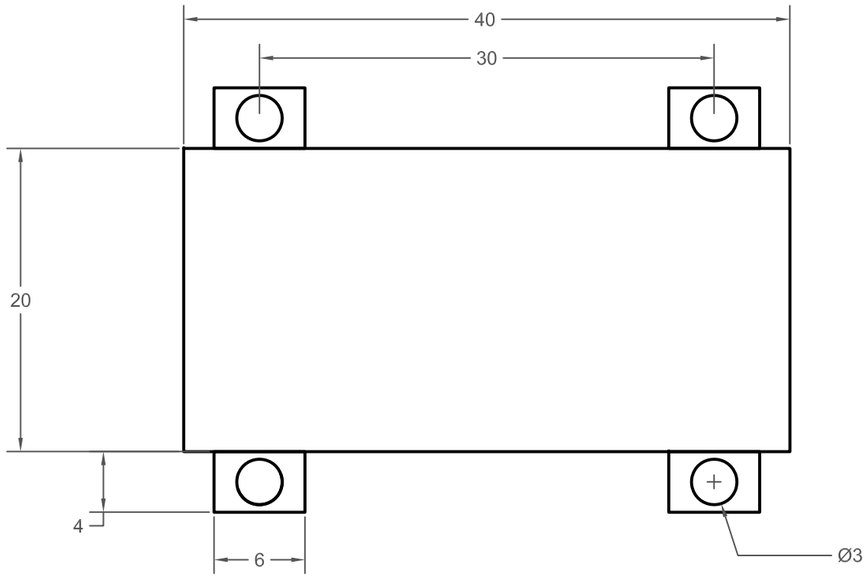

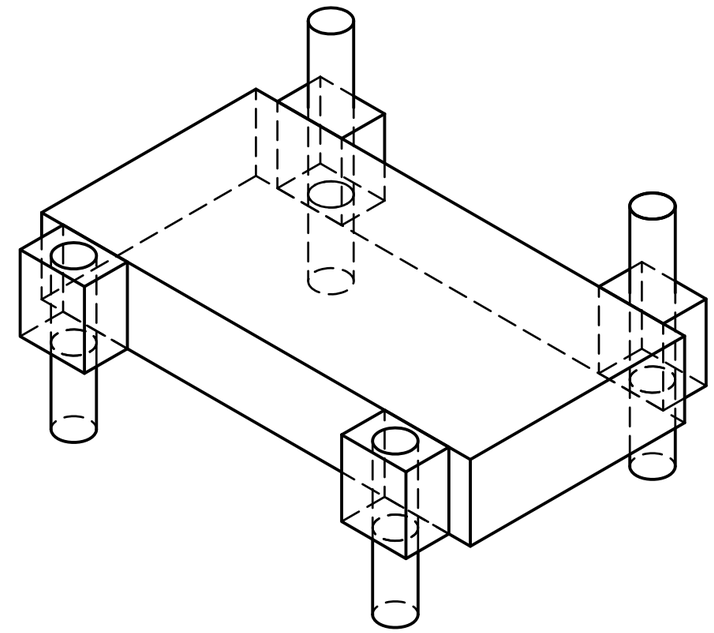

Platform Legs Loaded on Trailer

Working Elevated Platform Using
Modular Barge Sections

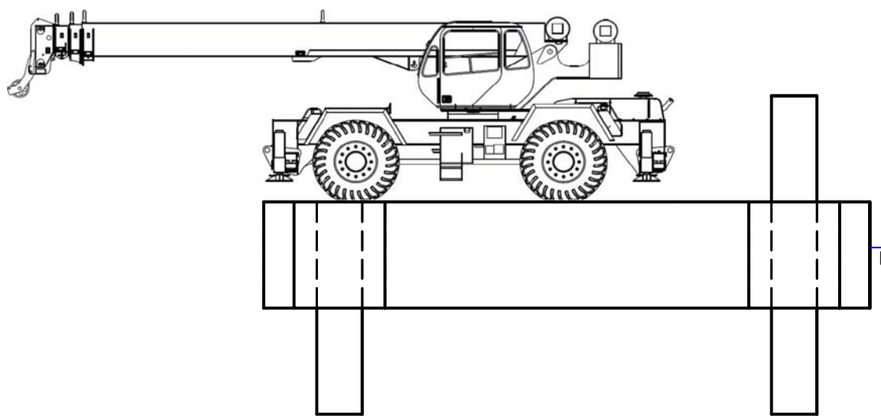

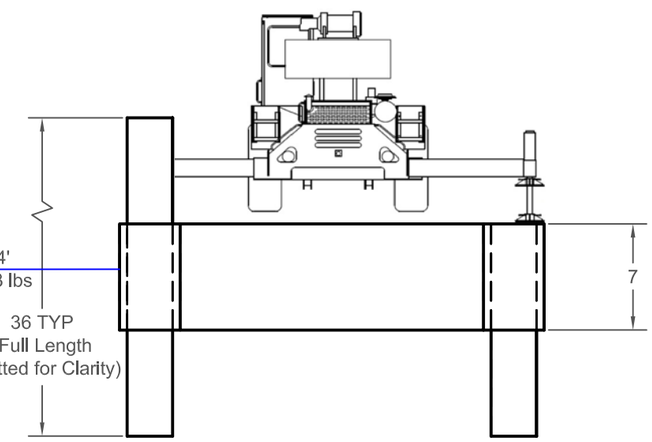

30 Ton Capacity Rough Terrain Crane

Hydrostatic Properties

Draft (ft)	Displacement Weight (lbs)
1.50	5,500
1.75	18,283
2.00	31,067
2.25	43,850
2.00	82,200
2.25	94,983
3.50	107,767
3.75	120,550
4.00	133,333
4.25	146,117

ALL UNITS IN FEET
(UNLESS NOTED)

DRAFT

GLOBAL
DIVING & SALVAGE, INC
3840 West Marginal Way S.W. Seattle, WA 98106
206 623 0621 FAX: 206 932 9036

DRAWN	DATE	FIGURE 8: SCHEMATIC OF ELEVATED PLATFORM TO BE USED AT PALMYRA ATOLL				
AL	08FEB13					
CHECKED	DATE					
APPROVED	DATE					
		APPROVED BY LETTER DATED: OWNER: A.B.S.: U.S.C.G.:				
		DWG NO. F12PS01171-PA-01	SHEET 1 OF 1	SIZE B	SCALE: 3/32":1'	REV -

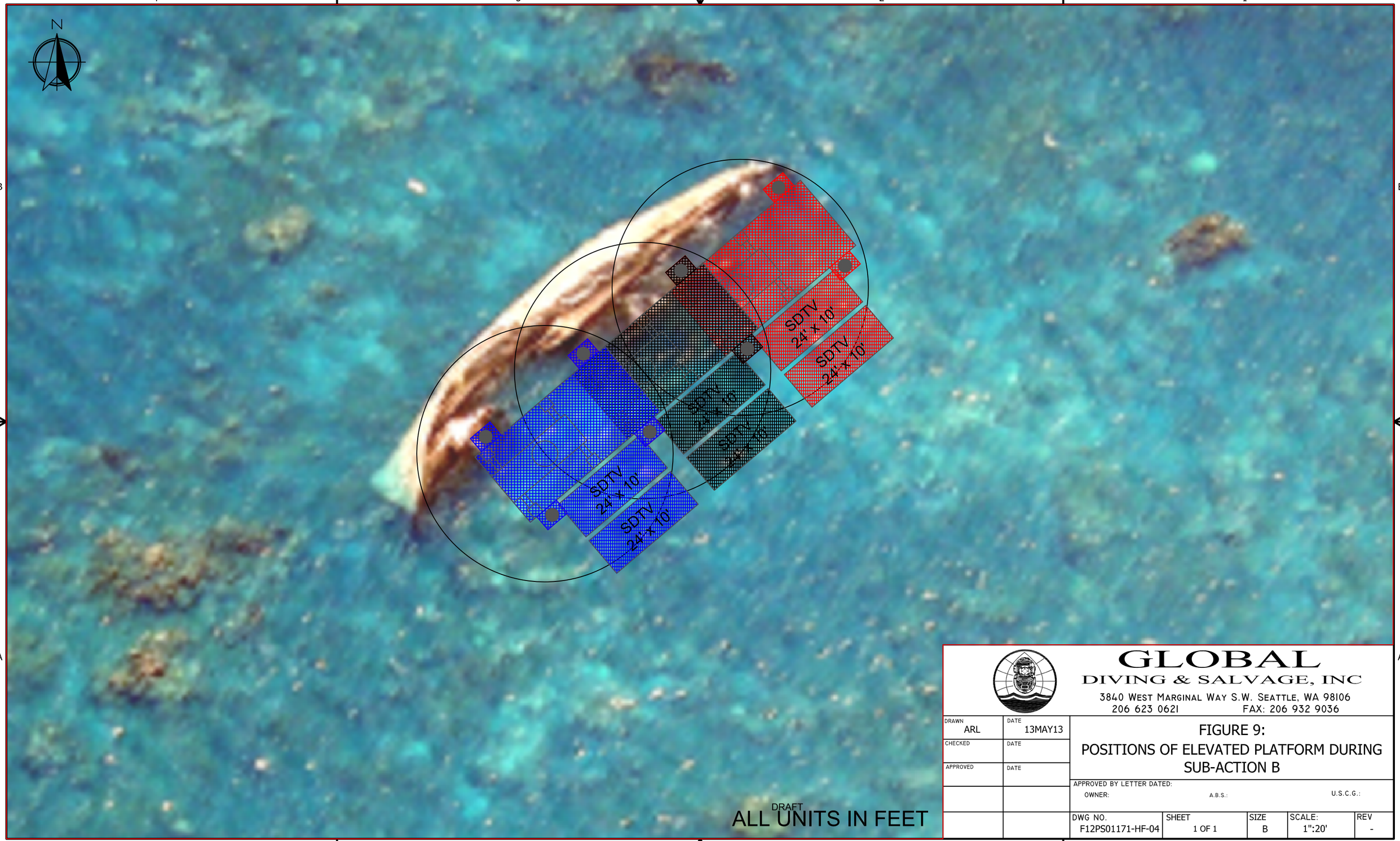

GLOBAL
DIVING & SALVAGE, INC
3840 West Marginal Way S.W. Seattle, WA 98106
206 623 0621 FAX: 206 932 9036

DRAWN ARL	DATE 13MAY13	FIGURE 9: POSITIONS OF ELEVATED PLATFORM DURING SUB-ACTION B
CHECKED	DATE	
APPROVED	DATE	APPROVED BY LETTER DATED: OWNER: A.B.S.: U.S.C.G.:

DWG NO.	SHEET	SIZE	SCALE:	REV
F12PS01171-HF-04	1 OF 1	B	1":20'	-

4.2.3 Sub-Action C—*Rust Island* Salvage

The pontoon vessel *Rust Island* is submerged at a depth of 4 to 8 ft and is located in close proximity to the *F/V Hui Feng No. 1* (Figure 6), approximately 200 yds from the dredged channel. The vessel is 64.3 ft by 28 ft and consists of 40 square pontoons and 8 somewhat triangular pontoons. The location and degraded condition of the vessel, as well as the sediment that has built up on the vessel present challenges for the salvage operation. In addition, live coral is abundant along the route to the proposed action area, creating a challenge for SDTV transit.

The general operating procedure for the proposed removal of the *Rust Island* is as follows:

1. The path between the shipwreck and barges 185-1 and 185-3 would be surveyed (by divers or via boat) for emergent coral heads (within 2 ft of surface), and temporary buoys would be used to mark the locations of the coral.
2. The salvage of the pontoon vessel would first be attempted by using the built-in connection system to separate the pontoons. If the connection system were no longer functional, exothermic torches would be used to cut the pontoons into sections; if necessary, hydraulic and/or pneumatic cutting saws would be used.
3. As sections of the vessel were separated or cut, a hydraulic crane would lift the sections and move them to the SDTVs, which would have long-tail engines and an 18-in. draft. The removal of the modular sections would likely occur above the surface of the water, and the sections would be transported to the barge located in the channel. If long-tail engines could not be used to power the SDTVs because the water was too shallow, a floating polypropylene line attached to a winch on barge 185-3 would be attached to the SDTV and used to "reel in" the SDTV.
4. The cutting and transport of pontoon sections would continue until the *Rust Island* salvage was complete.
5. Divers equipped with metal detectors would conduct an underwater survey to locate additional debris to 80 ft outward from extent of former location of the shipwreck. All metal and debris > 6 in. would be transported to the barge for disposal.

6 Environmental Effects

This section presents an assessment of the potential environmental effects of the proposed alternatives, including the No Action alternative, on habitat, the coral community, and protected wildlife. BMPs designed to minimize or mitigate effects on these resources are also discussed below.

Terrestrial habitat and wildlife are not discussed at length for either the No Action alternative or the Preferred Action alternative because any potential effects are limited to the marine environment. Also, it should be noted that no ESA-listed species of birds are expected to be present at Kingman Reef. The proposed action area at Kingman Reef would include portions of the emergent rubble spit; however, this area is not thought to provide necessary habitat for any terrestrial species. It is possible that seabirds could use Kingman Reef for resting habitat; however impacts related to the proposed Sub-Action A would be only temporary and would not affect a large number of individuals. For this reason, Sub-Action A is not expected to impact terrestrial species or necessary terrestrial habitat at Kingman Reef. The proposed action areas at Palmyra Atoll are wholly contained within the marine environment, and habitat and wildlife outside of the proposed action areas at Palmyra Atoll are not expected to be impacted by either Sub-Action B or Sub-Action C. Palmyra Atoll is used by migratory bird species, and visual and/or noise disturbances would be limited in duration to approximately 1 month at Palmyra Atoll and up to 10 days at Kingman Reef. The bristle-thighed curlew (*N. tahitiensis*) is known to overwinter on Palmyra Atoll, during which time it molts and is much less mobile. However, the proposed alternatives are not expected to disturb this species, which uses upland habitat that is some distance from the proposed action areas (Meyer 2013b).

The introduction of invasive species (such as occurred previously with *D. tenuissima*) would be mitigated through the use of proper decontamination procedures (i.e., pressure washing, rinsing gear with dilute bleach solution) and quarantine measures. To limit the transfer of corallimorphs from Palmyra Atoll to other areas, the salvage actions at Palmyra Atoll would be conducted after the actions at Kingman Reef.

In some instances, the descriptions of effects and mitigating measures presented herein may be repeated in multiple sections because the affected species are generally similar in physiology, have similar diets, use similar forage habitats, and seasonally overlap with other species within the proposed action areas.

6.1 NO ACTION ALTERNATIVE

The ongoing physical and biogeochemical effects caused by the sunken vessels at both Kingman Reef and Palmyra Atoll are described in Section 3. Under the No Action alternative, it is assumed that this baseline condition would continue. However, it is also expected that certain effects, specifically the expansion of the filamentous green macroalga *D. tenuissima* at Kingman Reef and the corallimorph *R. howesii* at Palmyra Atoll, would not only continue but increase over time (Kelly et al. 2012; Work et al. 2008). Potential direct and indirect effects on fish, sea turtles, and marine mammals related to the degradation of coral habitat (Section 3) would also be expected to continue and increase under the No Action alternative.

6.2 PREFERRED ACTION ALTERNATIVE

6.2.1 Sub-Action A – Kingman Reef salvage

6.2.1.1 Habitat Effects

The salvage of the shipwreck (i.e., the unidentified teak fishing vessel) at Kingman Reef would provide long-term habitat benefits through the removal of ongoing physical and biogeochemical impacts. However, the proposed Sub-Action A would potentially cause short-term effects, as detailed below:

- Underwater noise effects associated with exothermic cutting torches, saws, sledgehammers, and boat motors would be expected.
- If placement of anchors on the dry rubble spit were to be impracticable, it may be necessary to place additional stern anchors, which could potentially damage or displace some corals in deeper water.
- Above-water noise effects associated with diesel generators, crane operation, and limited tugboat engine noise would be expected. Above-water noise could temporarily degrade resting habitat for sea turtles at Kingman Reef.
- Overhead shading created by barges while stationed in the channel or lagoon could cause temporary behavior change in wildlife (e.g., habitat use).
- Overhead lighting could temporarily attract wildlife during nighttime hours. Work would not be conducted during nighttime hours, but operators would live onsite throughout operations. Intense lighting (such as that required during nighttime work) would not be required at night; rather, lighting would be restricted to deck lights on the barges. Lights would not be directed at the water.
- There would be a potential for effects related to the transport of invasive species; however, this potential would be minimized through the performance of a thorough hull cleaning of the tug and barges to remove marine growth prior to their departure from Long Beach, California. The vessels would undergo a thorough inspection prior to equipment mobilization in Honolulu, Hawaii, and appropriate salvage operation sequencing (i.e., the vessel at Kingman Reef would be salvaged first to avoid the transport of corallimorph fragments from Palmyra Atoll to Kingman Reef) would be followed.
- Effects on air quality would likely be minimal because all proposed vessels would be US Environmental Protection Agency (EPA) Tier II compliant and would be certified to the State of California air quality standards.

6.2.1.2 Coral Effects

Sub-Action A could have some short-term physical effects on coral species in the proposed action area. The technical approach for Sub-Action A (Global Diving &

Salvage 2013) calls for the placement of anchors in the dry rubble spit, which would be preferable because it would not impact coral species. However, if the placement of anchors in the dry rubble spit were to be impracticable, it might be necessary to place additional stern anchors, which could potentially damage or displace some corals in deeper water. The steep, interior side of the reef where anchors would be placed in this contingency is relatively unstable and supports a much less extensive coral formation; therefore, the placement of anchors in this location would minimize the impacts due to anchoring (were anchoring in the spit not possible). The dry rubble spit and sandy areas underwater are preferred locations for anchoring, as such efforts will be made to avoid coral impact via selective placement of anchors.

Physical effects by marine debris and biogeochemical inputs pose threats to the marine environment at Kingman Reef. Kingman Reef is one of the most pristine reef environments in the world; however, the shipwreck and associated debris pose a threat to the nearby coral species. Of the 59 coral species proposed for ESA listing (Appendix A), approximately 16 are known to be present at Kingman Reef. The exact locations of these colonies is unknown (Meyer 2013a). The removal of the shipwreck would eliminate threats to these species. This would likely result in a net benefit for the entire community that would far outweigh the potential impacts to coral. The benthic community at Kingman Reef is primarily composed of CCA and fast-growing corals that could recolonize anchor points within a matter of years.

6.2.1.3 Wildlife Effects

6.2.1.3.1 Marine Reptiles

Green sea turtle and hawksbill sea turtle are both found at Kingman Reef (Meyer 2013c) [9] and likely feed in the benthic zone as adults (Bjorndal 1997). Green sea turtles have been observed on the exposed rubble spit along the eastern portion of the reef, resting and basking in the sun (USFWS 2011b). The proposed area of Sub-Action A is within the lagoon from 20 ft in depth to the rubble spit, so the action area might overlap with sea turtle resting habitat. It is likely that, during the proposed work schedule, green and hawksbill sea turtles would be in the area of the Kingman Reef NWR based on their presence year-round at nearby Palmyra Atoll NWR (Meyer 2013c).

Identified potential impacts to these species caused by the proposed salvage action include ship strike, the production of underwater noise, temporary entanglement in lines, and temporary behavioral changes caused by human presence and activity. Chemical impacts are assumed to be highly unlikely and are discussed only briefly here. Similarly, significant impacts related to lighting the barges at night is only briefly noted, inasmuch as the impacts of such lighting would be temporary and minimal.

[9] Other species of sea turtles may transit the area but have not been specifically observed to date. These species are identified in Appendix A.

Each of these impacts would be discussed, along with measures for mitigating or minimizing impacts to marine reptiles.

Ship strikes are possible in the central lagoon at Kingman Reef, where turtles might be actively foraging in the benthic zone. Turtles at the surface in the area of the *Sarah C* tugboat, the SDTVs, or the materials barge could collide with the ships and be injured. Ship strikes involving sea turtles have not been noted previously in the Kingman Reef NWR, potentially because of the wary nature of these species[10] (Meyer 2013c) as well as the infrequent presence of ships. In the event of a sea turtle sighting by salvage operators, any and all boat activity would cease, and the sea turtle(s) would be allowed to transit the area without injury or harassment. Proactive monitoring of the area would limit unnecessary interactions with sea turtles. Also, limiting boat speeds to a few knots (as is currently done at Palmyra Atoll) would reduce the likelihood of serious injury to sea turtles. If all BMPs were to be observed, ship strikes could be entirely avoided or the severity of unlikely strikes could be minimized.

Underwater noise impacts on sea turtles have been discussed infrequently in the past (Samuel et al. 2005), although there is some indication that exposure to ambient anthropogenic noise may cause behavioral impacts on sea turtles (Bartol et al. 1999), [11] particularly near coastal cities (Samuel et al. 2005). With regard to the proposed salvage action, the use of vessel motors and underwater cutting tools during the action would only be temporary, inconstant, and largely limited to up to 10 days. In the event that a sea turtle were to be spotted during the salvage operation, all boating and cutting activity would cease until the turtle had transited the area. Although noise would not be entirely muted by ceasing operations while the animal was in the vicinity of the action area, the noise would be minimized to the maximum extent practicable. Significant impacts on behavior are not expected due to the relatively low intensity of noise produced by the equipment proposed for use at Kingman Reef. For example, exothermic cutting saws produce very little underwater noise and have been specifically selected for use to minimize wildlife impacts.

Entanglement of sea turtles in lines used to operate the LGPLV or SDTVs or to position the work platform would be possible although unlikely, and entanglement could result in drowning. Floating lines would be used to minimize physical contact with coral and wildlife; sea turtles that forage within the benthic zone would be less likely to interact with lines at the surface. If turtles were to haul out during Sub-Action A, they could come into contact with floating lines, but this would be highly unlikely due to the wariness of sea turtle species in the area; it would be more likely that turtles would avoid the action area altogether due to human presence (Meyer 2013c). Regardless, lines would be periodically monitored for entangled turtles. If

[10] A lack of appropriate reporting is also possible.

[11] Bartol et al. (1999) primarily discussed loggerhead turtles (*Caretta caretta*) and neurological responses as opposed to behavioral responses.

entanglement were to occur, it would be only temporary because the entangled individual would be visible at the surface (i.e., caught in floating lines) and could easily be found and freed. In the event that a sea turtle were to be observed in the action area, all activity would cease so that the turtle could transit the area. If a sea turtle were to become entangled in lines during that time, immediate response would be possible.

The chemical exposure of sea turtles at Kingman Reef to spilled material from the sunken vessel would be highly unlikely. The vessel is not expected to have petroleum product left on board, because it either burned in the onboard fire or was released over time as the ship deteriorated.

During hours of darkness, some lighting would be required on barges to provide visibility for operators living onsite. No salvage operations would take place at night, and so intense lighting would not be required. No lighting would be pointed directly into the water but would likely alter habitat for sea turtles somewhat during the night, particularly if they were to use the shallow waters near the action area to rest. Although lighting has been related to impacts on adult sea turtle nesting behavior, as well as the behavior of recent hatchling, nesting does not occur at Kingman Reef (Meyer 2013a, c). Such impacts are therefore not expected. Impacts related to disturbance during resting would be limited to the brief duration of operations and would only affect shallow waters in the immediate vicinity of the barges.

Human presence and activity would be necessary for the completion of the proposed salvage action. Sea turtles would likely avoid the action area altogether while humans were present (Meyer 2013c). Avoidance of ideal habitat could result in suboptimal foraging, and disturbance[12] from resting habitat (i.e., exposed rubble spit) could increase sea turtles' energy expenditure and physical stress. Green turtles feed primarily on vegetation as adults and could forage near the action area, which has become overgrown with *D. tenuissima*. Such disturbance would be largely unavoidable but would be limited in duration to up to 10 days. The effect would not likely be permanent, and turtles would be free to return to the proposed action area once the proposed action had been completed. Furthermore, the action area would constitute only a small fraction of the entire NWR where green and hawksbill turtles would be able to forage without being disturbed.

[12] Note that "disturbance" as discussed here is not intended to mean harassment for the purpose of deterrence. Rather, disturbance is the unintentional exclusion of timid wildlife from a location resulting solely from human presence and activity.

6.2.1.3.2 Marine Mammals

Many species of cetaceans have been observed or audibly recorded in the vicinity of the Kingman Reef NWR:[13] melon-headed whale (*P. electra*), false killer whale (*P. crassidens*), common bottlenose dolphin (*T. truncatus*), and Gray's spinner dolphin (*S. longirostris*). Many of these species were primarily observed near the more extensively studied Palmyra Atoll NWR (Roch et al. 2011; Baumann-Pickering et al. 2010a; Baumann-Pickering et al. 2010b; Martien et al. 2011; Aschettino et al. 2012; Brownell et al. 2009; Meyer 2013d, a), but these observations are relevant because the atoll is geographically similar to the Kingman Reef NWR.[14] USFWS (2011b) also noted that the common bottlenose dolphin (*T. truncatus*) and melon-headed whale (*P. electra*) frequent Kingman Reef. All cetacean species are protected under MMPA, but none of the observed species are listed under ESA. The IUCN lists all of the identified species above as being of "Least Concern" for conservation. Many of these species are potentially present near Kingman Reef during the entire year and may be near the Sub-Action A proposed action area during salvage operations (Meyer 2013d, a). Only melon-headed whale and common bottlenose dolphin frequent the area (Meyer 2013a); all other species are observed only infrequently.

To date, the endangered Hawaiian monk seal (*M. schauinslandi*) has never been observed at Kingman Reef, and its presence there is improbable. Kingman Reef is well outside their main range (NOAA Fisheries 2012b). General distribution maps provided by NOAA and satellite tracking conducted by NMFS both indicate that the Hawaiian monk seal has a limited range that excludes Kingman Reef (as well as Palmyra Atoll) (NOAA Fisheries 2012b). For these reasons, it is expected that Hawaiian monk seals would not be present at Kingman Reef and thus would not be directly or indirectly impacted by salvage operations in the Sub-Action A proposed action area.

Identified effects of the proposed salvage operation on cetacean species include ship strikes, the production of acute[15] underwater noise, temporary entanglement in lines, and human activity that could result in temporary behavioral changes. Each of these effects is discussed here, along with measures for mitigating or minimizing effects to marine mammals. Chemical effects at Kingman Reef are highly unlikely and thus are discussed only briefly.

The Sub-Action A proposed action area is within the lagoon to the fore reef, from 100ft in depth to the rubble spit and the location of the wrecked vessel; this area is unlikely

[13] Other species of marine mammals may transit the Kingman Reef NWR; these species are identified in Appendix A. It is not expected that these species will be present in the immediate vicinity of the proposed action area.

[14] The lack of site-specific documentation of the presence of cetaceans at Kingman Reef is a source of uncertainty.

[15] In this context, "acute" means that the exposure of animals to noise will be short-term, limited to the brief duration of the proposed action (i.e., up to 10 days).

to overlap with marine mammal forage habitat. Ship strikes are not likely in the central lagoon at Kingman Reef, where cetaceans have generally not been observed (Meyer 2013a). Specifically, melon-headed whales and common bottlenose dolphins have been observed at the outer areas of Kingman Reef, which would be far removed from the proposed Sub-Action A area. Habitat use by many cetacean species is generally limited to the steep sea floor relief and extensive shelf area waters where fish school (Stacey et al. 1994; Australian DSEWPC 2013) or to open ocean or deep water (NOAA Fisheries 2012d), as opposed to shallow reefs. Gray's spinner dolphin (*S. longirostris*) actively forages in deeper areas at night (NOAA Fisheries 2012e), when salvage operations would cease. Ship strikes could occur during transit to and from Hawaii; mobilization at Kingman Reef, prior to entering the lagoon; or demobilization to Palmyra Atoll. Boat noise has been reported to attract dolphins that "bow ride" (Richardson et al. 1995).

Monitoring of a vessel's perimeter and general area during transit would allow response maneuvers to be implemented (including coming to a full stop if necessary) in order to avoid any approaching cetaceans. Also, it has been noted that cetaceans are very fast and would be able to outmaneuver any slow-moving vessel in the area (Meyer 2013a). By limiting boat speeds in the area, ship strikes could be minimized in likelihood or severity. Most of a vessel's movements during Sub-Action A would be limited to very shallow waters within the lagoon, where cetaceans would not likely be present. No ship strikes of cetaceans have been recorded near Kingman Reef (IWC 2012; Jensen and Silber 2004), which is likely due to the depth at which most cetaceans forage as well as the infrequent presence of ships in the area. The majority of ship strikes noted by the International Whaling Commission (IWC) (2012) occurred in coastal areas that have extensive maritime activity.

If a cetacean were to be sighted during operations, all vessel activity would cease, and the cetacean would be allowed to transit the area without injury or harassment. Proactive monitoring of the proposed action area would be performed to limit unnecessary interactions with wildlife. The cetacean species that are thought to be present near Kingman Reef are typically present in social groups of at least two or more individuals but can congregate in groups as large as hundreds or thousands of individuals, depending on the location; these groups may also consist of more than one species (NOAA Fisheries 2012a, e, 2013, 2012c; Leatherwood et al. 1989). Thus, spotting cetaceans should be reasonably easy. For these reasons, ship strikes involving cetacean species at Kingman Reef would not likely occur as a result of the proposed salvage action.

The effect of underwater noise on cetaceans has been studied fairly extensively, and these studies indicate that exposure to ambient anthropogenic underwater noise might cause injury to or behavioral effects on some species of cetaceans (Weilgart 2007; Buckstaff 2004; Simard et al. 2010; Southall et al. 2007), particularly near coastal cities. Given that the proposed action area would be in the Kingman Reef NWR (and thus

protected from maritime activities) and removed from any anthropogenic sources of noise, chronic or ambient exposure would be unlikely. With regard to the proposed salvage action, the noise produced by vessel motors and underwater cutting tools during salvage would be only temporary, sporadic, and primarily limited to a period of up to 10 days.

It is possible that acute exposure to intense underwater noise could have an impact on cetacean species, particularly if they were in close proximity to the noise source (Bailey et al. 2010). Southall et al. (2007) reported behavioral effects on or injuries to cetacean species at various noise levels. Of the cetaceans that were classified as hearing "mid-frequency" noise, including all of the species identified here, few individuals were found to be behaviorally effected at ~100 db, whereas more were impacted at a higher noise levels (i.e., > 110 to 180 db).[16] None were impacted when exposed to noise levels < 100 db (Southall et al. 2007). Levels of noise produced by the equipment proposed for use at Kingman Reef would range from 93.5 to 97 db (e.g., the saws) at a distance of 3 ft. The noise would dissipate with distance from the source, so it is unlikely that there would be severe impacts on behavior or direct injury from noise produced as part of the salvage operation. As previously discussed, it is unlikely that cetacean species would be in the immediate vicinity of the proposed action area. In order to minimize the creation of underwater noise, exothermic saws would be the preferred method for cutting. [17] In the event that one or more cetaceans were to be spotted during the salvage operation, operators would cease all vessel and cutting activity until the cetacean had transited the area. Although noise would not be entirely eliminated by ceasing operations while an animal was in the vicinity of the proposed action area, it would be minimized to the maximum extent practicable.

The entanglement of marine mammals in lines used to operate the LGPLV or SDTVs would be possible although highly unlikely. Serious entanglement could result in drowning, although this would typically involve entanglement in submerged lines, ghost nets, or other marine debris related to fishing (Moore et al. 2009), which would be unrelated to the salvage operations at the Sub-Action A proposed action area. Floating lines would be used during Sub-Action A because cetaceans that forage below the ocean surface (i.e., in the pelagic zone) would be less likely to interact with lines at the surface. Lines would be periodically monitored for entangled mammals. In the event that a cetacean were to be observed in the proposed action area, all activity would cease, and the animal would be allowed to transit the area without injury or

[16] Other cetaceans that could transit the area (Appendix A) might belong to the mid-range group, the low-frequency group (e.g., *Balaenoptera* and *Megaptera* genuses), or the high-frequency group (e.g., *Kogia* genus). These species were not impacted at the 100-db level but were impacted at higher levels of noise (Southall et al. 2007).

[17] Underwater exothermic saws reportedly sound like bubbles or escaping gas, which is not expected to significantly interfere with cetacean behavior or communication (Lawrence 2013).

harassment. If a marine mammal were to become entangled during transit of the site, it would be immediately released.

The chemical exposure of marine mammals at Kingman Reef is highly unlikely. As discussed in Section 6.2.1.3.1, it is expected that no petroleum product remains onboard the sunken unidentified teak fishing vessel.

Human activity would be necessary for the completion of the proposed salvage operation. Most cetacean species would likely avoid the proposed action area while humans were present, although some (e.g., "bow riding" dolphins) might be curious and approach the proposed action area from the seaward side of the reef. As previously stated, all activity in the proposed action area would cease if cetaceans were to be spotted in the area. Cetacean species primarily forage over open ocean, shelf areas and steep slopes where fish school (Stacey et al. 1994; Australian DSEWPC 2013; NOAA Fisheries 2012d), so the reef within the Sub-Action A proposed action area does not provide optimal forage habitat for cetaceans. Similarly, the proposed action area is not recognized as an area used for breeding, nursing, or rearing. Therefore, it is not expected that exclusion from that specific area would result in undue stress. Wildlife disturbance, although unavoidable, would be limited in duration to a period of up to 10 days. Once the salvage operation had been completed, cetaceans would again be able to access the proposed action area for whatever reason. Note that the proposed action area constitutes only a small fraction of the entire Kingman Reef NWR.

6.2.1.3.3 Seabirds

Palmyra Atoll and Kingman Reef host much higher densities of marine birds than do offshore waters in the Monument. This is particularly evident at Palmyra, where at least 10 species of seabirds breed and may be present year-round. At Kingman Reef, the islets are primarily used for roosting; however, bird density is still high in the area. The Migratory Bird Treaty Act protects all of the seabird species at Palmyra Atoll and Kingman Reef. Mass mortalities of marine birds colliding with lighted vessels or lighthouses have been documented; there have been several cases of bird fallout related to artificial light on the decks of vessels stopped at Palmyra Atoll. Seabirds are accustomed to environments with few obstacles and no artificial light. However, they may be attracted to light because they associate it with bioluminescent prey. At Palmyra Atoll, the frequent rain and mist in the air combined with artificial lights in unexpected locations seems to exacerbate the disorientation of marine birds, specifically when departing to or returning from offshore foraging grounds. Birds traveling after dark at Palmyra Atoll frequently collide with lighted vessels anchored, moored or operating near the atoll. The probability of birds colliding with or "falling out" on the decks of any of the craft being used in Sub-Actions A, B, or C as work platforms or for living space is high if external lights are not kept to the minimum required by law during the operation. Seabirds that land on decks or work surfaces are

vulnerable to injury, crushing, or soiling from rust or oil, which can compromise the water repellency of their plumage. Protocols should be in place to handle, clean (if necessary), and release downed birds that may fall onto project craft.

During hours of darkness, some lighting would be required on barges to provide visibility for operators living onsite. No salvage operations would take place at night, and so intense lighting would not be required. No lighting would be pointed directly into the sky or water, but even the limited lighting planned for safety on the work platform or other vessels may attract birds near the action area. Impacts related to lighting would be limited to the brief duration of operations and would only affect the immediate vicinity of the barges. To avoid unnecessary impacts on seabirds, light on board the vessels and barges would be the minimal amount practicable required for safety of the salvage crew.

6.2.2 Sub-Action B – *F/V Hui Feng No. 1* Salvage

6.2.2.1 Habitat Effects

Habitat effects anticipated under Sub-Action B are expected to be similar to those described for Sub-Action A (Section 6.2.1.1) with the addition of the following:

- Physical effects would be limited to up to eight 36-in.-diameter holes for the jack-up legs of the elevated platform during salvage operations at Palmyra Atoll. These holes would compact coral skeleton covered with corallimorph but would not physically impact live coral. Although rugosity would be altered in these areas, the effect would occur in an already significantly altered environment and would allow for future restoration actions. Where possible and practicable, efforts will be made to place the jack-up legs of the elevated platform in sand to avoid impacts to live coral and reef structure.
- Sedimentation could occur, specifically during the *Rust Island* removal, due to potential disturbance of accumulated sediment in and around the degraded pontoons. The wreck is located in an area of good water flow (Meyer 2013a), and the sediment is coarse-grained. The release of sediment from the pontoons would likely have only a temporary effect, because corals would be able to slough off coarse sediment that settles on live tissue.
- Release of petroleum hydrocarbon products could occur during the process of hot tapping the fuel tanks. To minimize the risk of a release of petroleum hydrocarbons, containment or sorbent booms will be deployed while the crew hot taps the fuel tanks. Following successful removal of any remaining petroleum product on board the vessel, the containment or sorbent booms will be removed for the next phase of the project to avoid potential entanglement in the equipment by sharks, sea turtles, or other marine organisms.

6.2.2.2 Coral Effects

Sub-Action B would have the potential to effect coral in the vicinity of the proposed action area. Of the 59 coral species proposed for ESA listing (Appendix A), approximately 16 are known to exist at Palmyra Atoll, however the exact locations of these colonies are unknown (Meyer 2013d, a). Reef habitat in the immediate vicinity of the Sub-Action B area is a near monoculture of the invasive *R. howesii* over dead coral skeleton and shipwreck debris. Potential effects to the environment would include the compaction of corallimorph-covered coral skeletons by the eight 36-in.-diameter jack-up legs of the elevated platform that would be deployed adjacent to the *F/V Hui Feng No. 1* (Figure 8) and any potential petroleum release. However, these effects are unlikely to significantly affect coral in the vicinity of the Sub-Action B proposed action area. The elevated platform adjacent to the sunken vessel would be equipped with emergency spill and response equipment as specified in the pollution mitigation and response plan (Global Diving & Salvage 2013) (Appendix C). In addition, personnel trained in responding to marine oil spills would be on hand to contain a petroleum release and recover released petroleum.

Because the jack-up legs of the elevated platform would only affect reef structure that had already been impacted by corallimorphs and measures would be taken to avoid impact with live coral along SDTV routes, physical impacts on coral species would not be expected during Sub-Action B. Furthermore, the removal of the wreck would mitigate the more pressing threat to coral species, the expansion of *R. howesii*, by eliminating the source of iron associated with corallimorph growth and facilitating the implementation of a corallimorph management program at Palmyra Atoll.

6.2.2.3 Wildlife Effects

6.2.2.3.1 Marine Reptiles

Sea turtles have been observed at Palmyra Atoll throughout the year and will therefore be present during salvage operations (Meyer 2013a, c). Green sea and hawksbill sea turtles are known to use Palmyra Atoll for foraging (USFWS 2011d) and have been observed in the dredged channel near the Sub-Action B proposed action area (Meyer 2013c). However, in the western portion of the atoll, where the salvage operations of Sub-Action B are proposed, there are relatively few green turtles; Sterling et al. ([in press]) observed 211 green sea turtles between 2008 and 2011 at Palmyra Atoll. In this study (Sterling et al. [in press]), surveys conducted between 2005 and 2011 indicated that turtles are distributed unevenly across the atoll, with "hot spots" of abundance noted in the vicinity of the coral flats to the north, south, and east of the atoll. Also, hawksbill sea turtles in the area appeared to be much less abundant than green sea turtles, with only two juveniles and no adults observed throughout the atoll during the same study (Sterling et al. [in press]). Because there is a relatively low abundance of turtles near the Sub-Action B proposed action area and BMPs will be implemented during all salvage operations, the exposure of green sea and hawksbill

sea turtles to most of the impacts identified in Section 6.2.1.3.1 (i.e., ship strikes, temporary entanglement in lines, possible chemical exposure, and human activity that could result in temporary behavioral changes) would be unlikely.

The production of underwater noise would be likely during Sub-Action B; however, this effect would be limited in duration (i.e., approximately 1 month), and noise-producing activities would cease if turtles were to be observed in the proposed action area.

Ship strikes would also be possible, given that the majority of the larger vessels would be moored within the dredged channel, where turtles have previously been observed (Meyer 2013c, d). However, the baseline condition (Section 3.1.2) takes into account periodic research vessel traffic, so ship traffic associated with Sub-Action B would not be greatly increased. No ship strikes involving marine reptiles have been reported to date, in part due to the limitation on ship speed imposed by USFWS. Proactive monitoring of the proposed action area for marine reptiles, ceasing activities in the event that a marine reptile is sighted, and ensuring that vessels are piloted slowly should minimize or mitigate the likelihood and severity of ship strikes in the proposed action area.

The *F/V Hui Feng No. 1* is not expected to be a source of petroleum hydrocarbon contamination (IncidentNews 2013), but remnant diesel could be spilled were there to be a catastrophic failure during the hot-tapping of the fuel tanks. It is thought that the vessel contained approximately 27,000 gal. of diesel, of which only 1,500 gal. (primarily bilge waste) were spilled upon grounding (IncidentNews 2013). If the initial estimate of onboard diesel fuel is correct, it is expected that the vessel could still contain diesel fuel. If contamination were to occur and not be quickly contained, then the exposure of sea turtles could occur over a broad area, resulting in health effects or death (Hall et al. 1983). However, the potential for a fuel spill would be minimized through the use of hot-tapping methods prior to salvage operations and the availability of personnel trained in spill response and spill containment and recovery equipment as described in Appendix C.

While work is performed on the fuel tanks of the *F/V Hui Feng No. 1*, petroleum hydrocarbon containment equipment (e.g., containment or sorbent booms, sorbent pads) will be deployed to contain any incidental spill that occurs while hot tapping the fuel tanks. The oil containment equipment will be removed after the tanks are emptied to avoid any potential entanglement by sea turtles, sharks, or other marine organisms in the containment equipment.

6.2.2.3.2 Marine Mammals

Many species of cetaceans[18] have been observed or audibly recorded in the vicinity of Palmyra Atoll: melon-headed whale (*P. electra*), short-finned pilot whale (*G. macrorhynchos*), false killer whale (*P. crassidens*), common bottlenose dolphin (*T. truncatus*), and Gray's spinner dolphin (*S. longirostris*) (Roch et al. 2011; Baumann-Pickering et al. 2010a; Baumann-Pickering et al. 2010b; Martien et al. 2011; USGS 2012; Aschettino et al. 2012; Brownell et al. 2009; Meyer 2013d, a). Melon-headed whales and common bottlenose dolphins are commonly observed in the area (Meyer 2013a), and short-finned pilot whales (*G. macrorhynchus*) have been occasionally observed (USFWS 2011a). Others are infrequently observed. All cetacean species are protected under MMPA, but none of the previously documented species are listed under ESA. IUCN has classified all of the above-listed species as being of "Least Concern" for conservation. Many of the species are likely present near Palmyra Atoll throughout the entire year and could be in the vicinity of the Sub-Action B proposed action area during salvage operations (Meyer 2013a).

It is not impossible that the endangered Hawaiian monk seal (*M. schauinslandi*) could be encountered at Palmyra Atoll, but such an encounter would be very unlikely. Palmyra Atoll is well outside their main range (NOAA Fisheries 2012b), and Hawaiian monk seals have not been observed in the area for well over a decade (Meyer 2013a, d). General distribution maps provided by NOAA and satellite tracking conducted by NMFS indicate that the Hawaiian monk seal has a limited range that excludes Palmyra Atoll (NOAA Fisheries 2012b). Furthermore, the species has no critical habitat near the Palmyra Atoll (NMFS 2007). For these reasons, it is expected that Hawaiian monk seals would not be encountered in the proposed action area or directly or indirectly impacted by salvage operations associated with Sub-Action B.

Identified potential effects of the proposed salvage operation on cetacean species include ship strikes, the production of underwater noise, temporary entanglement in lines, possible chemical exposure (in the event of an uncontained spill), and human activity that could result in temporary behavioral changes. Each of these effects was discussed at length with respect to Sub-Action A (Section 6.2.1.3.2); differences between the effects likely at Palmyra Atoll and Kingman Reef are discussed below.

The Sub-Action B proposed action area would be over shallow reef with numerous emergent coral heads. It is unlikely that this area overlaps with marine mammal forage habitat at Palmyra Atoll. Ship strikes would not be likely to occur during salvage operations in the proposed action area or while transiting to the dredged channel to the south, where cetaceans have not generally been observed (Meyer 2013a). Based on the general habitat preferences of cetaceans (Section 6.2.1.3.2) and

[18] Other species of marine mammals might transit the Palmyra Atoll NWR; these species are identified in Appendix A. It is not expected that these species would be present in the immediate vicinity of the proposed action area.

the location of areas where they have been observed (Australian DSEWPC 2013; Meyer 2013a; NOAA Fisheries 2012d; Stacey et al. 1994), ship strikes during the Sub-Action B salvage operations would be highly unlikely. Ship strikes could potentially occur during mobilization to Palmyra Atoll from Kingman Reef, prior to entering the dredged channel or during demobilization to Hawaii. In some cases, the production of boat noise attracts dolphins that "bow ride" (Richardson et al. 1995). However, monitoring the perimeter and general area of the ship during transit would allow for the implementation of responsive maneuvers (including coming to a full stop if necessary) in order to avoid approaching cetaceans. It has been noted that many species of cetaceans, particularly those that are associated with bow riding, are highly maneuverable and fast and would be able to avoid ships moving at reduced speeds (Meyer 2013a). Therefore, adherence to the limitations on boat speeds imposed by USFWS at Palmyra Atoll (i.e., < 8 knots) would reduce the potential for ship strikes in this specific area. Regardless, all vessel movement during Sub-Action B would be limited to very shallow waters, where cetaceans would not likely be present. Furthermore, ship strikes of cetaceans near Palmyra Atoll have not been reported previously (IWC 2012; Jensen and Silber 2004), likely due to the depth at which most cetaceans forage and the infrequent presence of ships in the area (as well as the imposed reduction in speed). Research vessels do operate periodically in the area (Section 3.1.2), and no ship strikes associated with these vessels have been reported to date. For all of these reasons, as well as the implementation of BMPs previously noted (Section 6.2.1.3.2), ship strikes involving cetacean species in the area of Sub-Action B would not be likely.

The exposure of marine mammals to underwater noise at Palmyra Atoll is expected to be similar to that at Kingman Reef (Section 6.2.1.3.2), with the exception of the diesel-powered hydraulic unit that is used above the sea surface to jack up the elevated platform, which produces noise of 100.1 db at 3 ft. In general, it is not expected that cetaceans will be very close to the proposed action areas but could rather be affected by underwater noise at a distance. It is possible that acute exposure to noise > 100 db, which is known to be associated with behavioral effects (Southall et al. 2007), could result from the operation of the diesel-powered hydraulic unit used to jack up the elevated platform in the Sub-Action B proposed action area. However, it is unlikely that the noise produced by this equipment would exceed baseline noise levels underwater, inasmuch as the diesel-powered unit would be used on the barge. The process of jacking up the platform would be very brief and so would not be expected to have a marked impact on cetaceans in the surrounding area.

The chemical exposure of marine mammals to spilled material from the sunken vessel at Palmyra Atoll is possible, although unlikely. The vessel is not expected to have much petroleum product (i.e., diesel fuel) left on board (IncidentNews 2013). However, it is entirely possible that small amounts of residual petroleum products remain within the vessel. Effects to wildlife from a chemical spill and mitigation

measures to be implemented in the event of a spill in the Sub-Action B proposed action area are expected to be similar to those described for Sub-Action A (Section 6.2.1.3.2).

Human activity would be necessary for the completion of the salvage operations proposed under the Preferred Action alternative. Most cetaceans would be expected to avoid the proposed action area while humans were present, and the shallow depth in the proposed action area of Sub-Action B should limit "bow riding" dolphins from approaching the site. As stated previously, all activity in the proposed action area would cease if cetaceans were to be spotted nearby. Because these species are often wary of human activity, it is unlikely that they would approach the proposed action area. Cetacean species largely forage in open ocean or over shelf and steep slopes where fish school (Stacey et al. 1994; Australian DSEWPC 2013; NOAA Fisheries 2012d), so optimal forage habitat is not within the Sub-Action B proposed action area (i.e., shallow, emergent coral reef). Disturbance, although unavoidable, would be limited in duration to approximately 1 month. The effect would be expected to be of a low magnitude because exclusion from necessary breeding, nursing, resting, or forage habitat would not occur. The effect would not likely be permanent.

6.2.2.3.3 Seabirds

Palmyra Atoll and Kingman Reef host much higher densities of marine birds than do offshore waters in the Monument. This is particularly evident at Palmyra Atoll where at least 10 species of seabirds breed and may be present year-round. At Kingman Reef, the islets are primarily used for roosting; however, bird density is still high in the area. The Migratory Bird Treaty Act protects all of the seabird species at Palmyra Atoll and Kingman Reef. Mass mortalities of marine birds colliding with lighted vessels or lighthouses have been documented; there have been several cases of bird fallout related to artificial light on the decks of vessels stopped at Palmyra Atoll. Seabirds are accustomed to environments with few obstacles and no artificial light. However, they may be attracted to light because they associate it with bioluminescent prey. At Palmyra Atoll, the frequent rain and mist in the air combined with artificial lights in unexpected locations seems to exacerbate the disorientation of marine birds, specifically when departing to or returning from offshore foraging grounds. Birds traveling after dark at Palmyra Atoll frequently collide with lighted vessels anchored, moored or operating near the atoll. The probability of birds colliding with or "falling out" on the decks of any of the craft being used in Sub-Actions A, B, or C as work platforms or for living space is high if external lights are not kept to the minimum required by law during the operation. Seabirds that land on decks or work surfaces are vulnerable to injury, crushing, or soiling from rust or oil which can compromise the water repellency of their plumage. Protocols should be in place to handle, clean (if necessary), and release downed birds that may fall onto project craft.

During hours of darkness, some lighting would be required on barges to provide visibility for operators living onsite. No salvage operations would take place at night, and so intense lighting would not be required. No lighting would be pointed directly into the sky or water but even the limited lighting planned for safety on the work platform or other vessels may attract birds near the action area. Impacts related to lighting would be limited to the brief duration of operations and would only affect the immediate vicinity of the barges. To avoid unnecessary impacts on seabirds, light on board the vessels and barges would be the minimal amount practicable required for safety of the salvage crew.

6.2.3 Sub-Action C – *Rust Island* salvage

6.2.3.1 Habitat Effects

Habitat effects anticipated under Sub-Action C would be similar to those discussed for Sub-Action B (Section 6.2.2.1).

6.2.3.2 Coral Effects

Coral effects anticipated under Sub-Action C would be similar to those described for Sub-Action B (Section 6.2.2.2).

6.2.3.3 Wildlife Effects

6.2.3.3.1 Marine Reptiles

Marine reptile effects anticipated under Sub-Action C would be similar to those discussed for Sub-Action B (Section 6.2.2.3.1).

6.2.3.3.2 Marine Mammals

Marine mammal effects anticipated under Sub-Action C would be similar to those discussed for Sub-Action B (Section 6.2.2.3.2).

6.2.3.3.3 Seabirds

Seabird effects anticipated under Sub-Action C would be similar to those discussed for Sub-Action B (Section 6.2.2.3.3).

6.3 SUMMARY OF ENVIRONMENTAL EFFECTS BY ALTERNATIVE

Environmental effects are summarized by alternative and sub-action in Table 1.

Table 1. Summary of possible adverse impacts of alternatives

Alternative	Potential Effect					
	Kingman Reef			Palmyra Atoll		
	Habitat/ Water Quality	Coral Community	Wildlife	Habitat/ Water Quality	Coral Community	Wildlife
No Action Alternative	**physical erosion of reef structure caused by ship and debris**; **continual supply of iron to water column as vessels degrade;** accidental ingestion of debris	**physical abrasion and crushing of coral by ship and debris**; **leeching of iron, causing coral community shift and proliferation of *D. tenuissima;*** potential outbreaks of *A. planci*	**indirect effects on food web through habitat and coral impacts**; **degradation of potential forage habitat**	**continual supply of iron to water column as vessels degrade; physical effects to habitat**	**physical wear from ship; leeching of iron, causing coral community shift and proliferation of corallimorphs**	**effects on food web through habitat and coral effects with resulting degradation of forage habitat**
Preferred Action alternative – Sub-Action A, Kingman Reef fishing vessel salvage	**underwater noise**; localized degradation of coral structure at anchor points	localized mortality of coral at anchor points	**underwater noise**; entanglement; ship strike; **disturbance due to presence of humans; disturbance due to deck lights**	na	na	na
Preferred Action alternative – Sub-Action B, *F/V Hui Feng No. 1* salvage	na	na	na	**underwater noise**; petroleum release; crushing or breaking of coral structure	petroleum exposure; physical crushing or breaking of coral	**underwater noise**; **disturbance due to presence of humans**; petroleum exposure; entanglement; ship strike; disturbance due to deck lighting
Preferred Action alternative – Sub-Action C, *Rust Island* salvage	na	na	na	**underwater noise**; **sediment resuspension**; sedimentation of coral; physical crushing or breaking of coral	sedimentation of coral; physical crushing or breaking of coral	**underwater noise**; **disturbance due to presence of humans**; petroleum exposure; entanglement; ship strike; disturbance due to deck lighting

na – not applicable

Bold identifies a temporary impact that would be likely to occur; all others would be possible but highly unlikely due to various mitigating factors or procedural controls.

6.4 CUMULATIVE IMPACTS

The CEQ guidance (1997) identifies four basic types of effects that can lead to cumulative impacts:

- **Type 1 –** Repeated additive effects on a resource from a single project
- **Type 2 –** Stressors from a single project that have an interactive net effect on a resource
- **Type 3 –** Additive effects on a resource arising from multiple sources
- **Type 4 –** Effects arising from multiple sources that affect resources in an interactive fashion

Although the salvage operations at Kingman Reef and Palmyra Atoll would have temporary adverse impacts on individuals (mostly coral), cumulative impacts on the community would not be expected. Noise levels during salvage operations would not be substantially different from current underwater noise levels from boat traffic at the sites. The research station currently operates a 26-ft ocean-going vessel and five 16-ft Carolina skiffs powered by 20- to 60-horsepower engines. In addition, research activities in this environment have included the use of pneumatic and hydraulic drilling and the installation of permanent transects using hammers. Thus, the use of saws or motors during salvage operations would be comparable to work already performed in the vicinity of the shipwrecks, particularly at Palmyra Atoll. All actions would occur during a finite period of time (i.e., up to 10 days at Kingman Reef and approximately 1 month at Palmyra Atoll) and would not represent a chronic noise disturbance. The proposed actions would also not be repeated over time; the shipwrecks would be salvaged only once.

The risk of physical damage to coral from the shipwrecks already exists in the environment, and the preferred alternative would remove the greatest physical threat to the reefs. Strict adherence to BMPs, including surveying transit routes prior to salvage operations, minimal use of anchor lines and anchors in coral substrate, and adherence to and rapid implementation of an emergency spill and response plan would avoid and minimize threats to coral reefs during the removal of the vessels. No significant impacts would be expected to occur during the Preferred Action.

It should be noted that the concurrence of USFWS and the Palmyra Atoll Research Consortium (PARC) operations with the proposed salvage actions (Sub-Actions B and C) represents a possible additive source for impacts at Palmyra Atoll NWR. Specifically, the presence of humans would be increased during the actions. The fact that no ship strikes have occurred as a result of boat traffic at Palmyra Atoll to date suggests that the increased presence of boat traffic during the Preferred Action would not pose an additive source for ship strikes.

Other noted potential impacts, such as exposure to chemicals, entanglement in lines, or underwater noise, are not considered to be additive. Rather, the exposure to chemicals and entanglement in lines would be limited only to the salvage operations. Underwater noise, although it could be more diffuse with additional vessels in the water, would not increase in intensity and thus not result in significant impacts (i.e., strandings).

6.5 Significant Unavoidable Negative Effects

No significant unavoidable negative effects have been identified for protected species. Temporary impacts resulting in non-significant adverse effects have been noted in earlier sections (Table 1), but these impacts would not result in a significant adverse effect relative to baseline conditions. Only problematic corallimorph species under the elevated platform in the area of Sub-Action B would be significantly impacted and then only within the footprint of the eight 36-in.-diameter holes. This footprint is very small relative to the size of the refuge, as well as the area within the refuge that is colonized by corallimorphs. Because the ultimate goal of the restoration effort at Palmyra Atoll is to limit the aggressive growth of these species, this negative impact could alternatively be viewed as a positive effect on the biodiversity of the overall community. Similarly, Sub-actions A and C would not result in significant unavoidable negative effects on protected species.

6.6 Relationship Between Local Short-Term Uses of the Environment and Long-Term Productivity

The Palmyra Atoll and Kingman Reef NWRs are considered to be some of the most pristine reef environments in the world because of their relative isolation and the lack of anthropogenic inputs (e.g., coastal pollution discharges, overfishing, urban runoff). The three shipwrecks have negatively impacted the physical, biological, and biogeochemical environments at Palmyra Atoll and Kingman Reef. At Palmyra Atoll, the wrecks have enriched the marine environment with iron, a limiting nutrient for autotrophs in Pacific coral reef communities, thus encouraging aggressive growth of the corallimorph *R. howesii* at Palmyra Atoll and the macroalga *D. tenuissima* at Kingman Reef. The rapid spread of corallimorph has initiated a dramatic phase shift in the reef community at Palmyra Atoll from a diverse coral-dominated environment to a corallimorph-dominated one. As a result, the resident fish assemblage within the impacted area has also changed. At Kingman Reef, marine debris from the fishing vessel has damaged the physical structure of the reef in addition to leached iron, with an associated phase shift away from CCA and hard corals to algae-dominated communities.

Although salvage operations would have short-term effects related to underwater noise, the physical presence of the vessels and barges, and the impact of the jack-up legs on the dead coral skeleton substrate, the removal of the three vessels would provide a longer-term benefit to the coral reef ecosystem at Palmyra Atoll and Kingman Reef. Salvage operations performed under each sub-action would remove physical and

biogeochemical hazards from the reefs and provide an opportunity for the management of problematic species of corallimorph or macroalgae (as applicable).

6.7 Irreversible and Irretrievable Commitment of Resources

Certain irreversible and irretrievable funds and resources would be required in order to complete the proposed Preferred Alternative connected actions. The cost of labor and all associated requirements for maintaining a crew onboard a barge (e.g., food, toiletries, emergency equipment, personal protective equipment) would be paid or otherwise consumed by the contractor. Similarly, fuel and other consumables associated with the operation of machinery and disposal of salvaged material would be exhausted during the salvage operations.

6.8 Cultural and Economic Impacts of Alternatives

6.8.1 No Action alternative

Kingman Reef and Palmyra Atoll have no indigenous peoples and no known cultural resources that require protection. Therefore, cultural resources of anthropological interest can be excluded from further consideration.

Under the No Action alternative, habitat impacts -- specifically phase shifts in the coral community to corallimorph or macroalgal species from the stable hard coral and CCA community – would be allowed to continue and would be expected to worsen over time. The degradation of the natural community, one that is widely considered the "pristine" baseline for comparison with those of degraded reefs, is expected to have a negative impact on the scientific community at the Kingman Reef and Palmyra Atoll NWRs, which relies heavily on grant money and donations in order to continue scientific research. Research conducted in the area provides insight into reef ecology, biology, and biogeochemistry, as well as the impacts of climate change, on the ecosystem. Without such research, observations made by Work et al. (2008) or Kelly et al. (2012) may not have been possible, and the known impacts at Palmyra Atoll and Kingman Reef would have gone unnoticed.

Given that all NWRs are intended to provide for the conservation, management, and, where appropriate, restoration of both natural and cultural resources in perpetuity, allowing these resources to continue to degrade (i.e., No Action alternative) is directly opposed to the mission of the NWR system in general and specifically the purpose of the Palmyra Atoll and Kingman Reef NWRs (according to language in 16 USC 460k-460l, 668dd-668ee, and 742f).

6.8.2 Preferred Action Alternative

Kingman Reef and Palmyra Atoll have no indigenous peoples and no known cultural resources that require protection. Therefore, cultural resources can be excluded from further consideration.

The Preferred Action alternative is expected to have a positive net impact on the natural communities at both Kingman Reef and Palmyra Atoll, resulting in a positive economic impact in the form of continued research funding and donations. It is assumed that by providing for healthier communities at both locations, these areas would continue to be used as a "pristine" baseline for comparison with those at degraded reefs and would stimulate donor interest and generate grant funding for the scientific community.

7 Consultation and Coordination

The NEPA scoping process (40 CFR 1501.7) was used to determine the scope of the analysis and identify potential issues and opportunities related to the Preferred Action alternative. A summary of the scoping and public involvement process for the proposed actions follows. The NEPA scoping process for the removal of shipwrecks from Palmyra Atoll and Kingman Reef NWRs involved both internal and external scoping. The internal scoping process included a review of the biological, physical, and social issues associated with removing shipwrecks from Palmyra Atoll and Kingman Reef. The external scoping process involved consultation with cooperative and regulatory agencies that have specialized expertise or a stake in the outcome of the project.

Refuge managers explored multiple options for shipwreck removal, including the coordination of draft project proposals with NOAA for an American Recovery and Reinvestment Act project, as well as requesting a professional training exercise from the US Department of Defense (DOD) military readiness program. Both options were identified as potential means for removing the shipwrecks from Palmyra Atoll and Kingman Reef.

Scientists from the US Geological Survey (USGS), University of Hawaii, and PARC have conducted scientific studies on the effects of the shipwrecks, documenting the need for their removal. A non-governmental organization, the Marine Conservation Institute, sponsored an online petition for the DOI and USFWS to remove the wrecks (Youle 2011); this was the extent of public involvement.

7.1 Regulatory Framework

The following federal codes of regulation, proclamations, and executive orders are potentially relevant to the proposed Preferred Action alternative:

- Antiquities Act (16 USC 431 *et seq.*), which provides statutory authority for the establishment of national monuments
- Proclamation 8336, January 6, 2009 – Establishment of Palmyra Atoll and Kingman Reef as a part of the Monument
- Clean Water Act of 1972, as amended (33 USC 1251 *et seq.*)
- Endangered Species Act of 1973, as amended (16 USC 1531 *et seq.*)

- Executive Order 13186 of January 10, 2001 – Responsibilities of Federal Agencies to Protect Migratory Birds
- Executive Order 13112 of February 3, 1999 – Invasive Species
- Executive Order 13089 of June 11, 1998 – Coral Reef Protection
- Executive Order 13158 of May 26, 1998 – Marine Protected Areas
- Executive Order 11990 of May 24, 1977—Protection of Wetlands
- Executive Order 12898 of February 11, 1994 – Environmental Justice
- Executive Order 11514 of March 5, 1970 – Protection and Enhancement of Environmental Quality
- Executive Order 12962 of June 9, 1995 – Recreational Fisheries
- Federal Insecticide, Fungicide, and Rodenticide Act of 1947, as amended (7 USC 136 et seq.)
- Fish and Wildlife Act of 1956 (16 USC 742f, 16 USC 661 *et seq*.)
- Marine Mammal Protection Act of 1972 (16 USC 1361 *et seq*.)
- Migratory Bird Treaty Act of 1918, as amended (16 USC 703-712, July 3, 1918)
- National Environmental Policy Act of 1969 (42 USC 4331 *et seq*.)
- National Historic Preservation Act of 1966, as amended through 2000, (16 USC 470 et seq.)
- Archeological Resources Protection Act (16 USC 470aa-mm)
- National Wildlife Refuge System Administration Act of 1966, as amended, (16 USC 668dd-ee)
- Refuge Recreation Act (16 USC 460k-3)
- Rivers and Harbors Act (33 USC 401 *et seq*.)
- Magnuson-Stevens Fishery Conservation and Management Act of 1976, as amended (16 USC 38 *et seq*.)
- Coastal Zone Management Act (16 USC 1451 *et seq*., 15 CFR 923)
- Public Law 106-554—Information Quality
- Paper Reduction Act (44 USC 3501 *et seq*.)

All the regulations listed above were considered during the compilation of this EA and the development of the technical approach for the Preferred Action. All measures would be taken to comply with the regulations listed above as appropriate to the Preferred Action alternative.

7.2 AGENCY SCOPING AND REVIEW

A planning team consisting of USFWS biologists, ecologists, engineers, contract specialists, and managers developed the scope of work for the project. During its development, over the course of years, team members met and communicated with scientists and managers from NOAA, USGS, USCG, and DOD, underwater salvors, marine engineers, non-governmental organizations, universities, and members of the public to discuss the project and operational needs.

8 List of Preparers

This document was prepared by David DeVilbiss, Kerry Walsh, and Andrew Lawrence of Global Diving and Salvage, Inc.; Martin Curtin of Curtin Maritime, Corp.; and Kathleen Hurley, Brian Church, and Ron Gouguet of Windward Environmental LLC. Additional input and review was provided by Amanda Meyer, Susan White, and Mark Harris of USFWS.

9 Agencies, Organizations, and Persons Consulted

Amanda Meyer of USFWS, manager at Palmyra Atoll NWR, was consulted in the preparation of this EA. Also, Amanda Meyer will consult informally with NMFS as part of an informal Section 7 consultation for the two protected species of sea turtles and the Hawaiian monk seal.

10 References

Aschettino JM, Baird RW, McSweeney DJ, Webster DL, Schorr GS, Huggins JL, Martien KK, Mahaffy SD, West KL. 2012. Population structure of melon-headed whales (*Peponocephala electra*) in the Hawaiian Archipelago: evidence of multiple populations based on photo identification. Mar Mam Sci 28(4):666-689.

Australian DSEWPC. 2013. *Peponocephala electra.* Species Profile and Threats Database [online]. Australian Government Department of Sustainability, Environment, Water, Population and Communities, Canberra, Australia. [Cited 5/8/13.] Available from: http://www.environment.gov.au/sprat.

Bailey H, Senior B, Simmons D, Rusin J, Picken G, Thompson PM. 2010. Assessing underwater noise levels during pile-driving at an offshore windfarm and its potential effects on marine mammals. Mar Poll Bull 60:888-197.

Bartol SM, Musick JA, Lenhardt ML. 1999. Auditory evoked potentials of the loggerhead sea turtle (*Caretta caretta*). Copeia 1999:836-840.

Baumann-Pickering S, Wiggins SM, Hildebrand JA. 2010a. Discriminating features of echolocation clicks of melon-headed whales (*Poponocephala electra*), bottlenose

dolphins (*Tursiops truncatus*), and Gray's spinner dolphins (*Stenella longirostris longirostris*). J Acoust Soc Am 128(4):2212-2224.

Baumann-Pickering S, Wiggins SM, Roth EH. 2010b. Echolocation signals of a beaked whale at Palmyra Atoll. J Acoust Soc Am 127(6):3790-3799.

Bellwood DR, Hoey AS, Ackerman JL, Depczynski M. 2006. Coral bleaching, reef fish community phase shifts and the resilience of coral reefs. Glob Ch Biol 12:1587-1594.

Bjorndal KA. 1997. Foraging ecology and nutrition of sea turtles. In: Lutz PL, Musick JA, eds, The biology of sea turtles. Boca Raton, FL. CRC Press, Boca Raton, FL, pp 199-231.

Brainard R, Maragos J, Schroeder R, Kenyon J, Vroom P, Godwin S, Hoeke R, Aeby G, Moffit R, Lammer M, Gove J, Timmers M, Holzwarth S, Kolinski S. 2005. The state of the coral reef ecosystems of the U.S. Pacific remote island areas. In: Waddell JE, ed, The state of the coral reef ecosystems of the United States and Pacific Freely Associated States: 2005. NOAA Technical Memorandum NOS NCCOS 11. Silver Spring, MD. NOAA/NCCOS Center for Coastal Monitoring and Assessment, National Oceanic and Atmospheric Administration, Silver Spring, MD, pp 338-372. Available from: http://ccma.nos.noaa.gov/ecosystems/coralreef/coral_report_2005/PRIAs_Ch12_C.pdf.

Brownell RL, Jr, Ralls K, Baumann-Pickering S, Poole MM. 2009. Behavior of melon-headed whales, *Peponocephala electra*, near oceanic islands. Mar Mam Sci [DOI: 10.1111/j.1748-7692.2009.00281.x].

Bruckner A, K Buja K, L Fairey L, Gleason K, Harmon M, Heron S, Hourigan T, Jeffrey C, Kellner J, Kelty R, Leeworthy B, Liu G, Pittman S, Shapiro A, Strong A, Waddell J, Wiley P. 2005. Threats and stressors to U.S. coral reef ecosystems. In: Waddell JE, ed, The state of the coral reef ecosystems of the United States and Pacific Freely Associated States: 2005. NOAA Technical Memorandum NOS NCCOS 11. Silver Spring, MD. NOAA/NCCOS Center for Coastal Monitoring and Assessment, National Oceanic and Atmospheric Administration, Silver Spring, MD, pp 12-44.

Buckstaff KC. 2004. Effects of watercraft noise on the acoustic behaviour of bottlenose dolphins, *Tursiops truncatus*, in Sarasota Bay, Florida. Mar Mam Sci 20(4):709-725.

Carretta JV, Oleson E, Weller DW, Lang AR, Forney KA, Baker J, Hanson B, Martien K, Muto MM, Lowry MS, Barlow J, Lynch D, Carswell L, Brownell RL, Jr, Mattila DK, Hill MC. 2013. US Pacific marine mammal stock assessments: 2012. NOAA-TM-NMFS-SWFSC-504. Southwest Fisheries Science Center, National Marine Fisheries Service, LaJolla, CA.

CEQ. 1997. Considering cumulative effects under the National Environmental Policy Act [online]. Council on Environmental Quality, Washington, DC. January 1997. Available from: http://ceq.hss.doe.gov/publications/cumulative_effects.html.

Chadwick-Furman NE, Spiegel M. 2000. Abundance and clonal replication in the tropical corallimorpharian *Rhodactis rhodosoma*. Invert Biol 119:351-360.

Chadwick NE, Adams C. 1991. Locomotion, asexual reproduction, and killing of corals by the corallimorpharian *Corynactis californica*. Hydrobiologia 216/217:263-269.

Chong-Seng KM, Mannering TD, Pratchett MS, Bellwood DR, Graham NA. 2012. The influence of coral reef benthic condition on associated fish assemblages. PloS ONE 7(8):e42167.

Collen JD, Gardner JPA, Garton DW. 2009. Application of the littoral cell concept to managing a protected atoll: Palmyra Atoll National Wildlife Refuge. Ocean Coast Manage 52:628-635.

DeMaster DP, Fowler CW, Perry SL, Richlen MF. 2001. Predation and competition: the impact of fisheries on marine-mammal populations over the next one hundred years. J Mammal 82(3):641-651.

Dinsdale E, Pantos O, Smriga S, Edwards RA, Angly F, Wegley L, Hatay M, Hall D, Brown E, Haynes M, Krause L, Sala E, Sandin SA, Thurber RV, Willis BL, Azam F, Knowlton N, Rohwer F. 2008. Microbial ecology of four coral atolls in the northern Line Islands. Plos ONE 3(2):e1584.

DOI. 2013a. Kingman Reef map [online]. US Department of the Interior Office of Insular Affairs, Washington, DC. [Cited 5/8/13.] Available from: http://www.doi.gov/oia/islands/kingmanreef.cfm.

DOI. 2013b. Palmyra Atoll overview [online]. US Department of the Interior Office of Insular Affairs, Washington, DC. [Cited 6/25/13.] Available from: http://www.doi.gov/oia/islands/palmyraatoll.cfm.

Friedlander AM, Brown EK, Jokiel PL, Smith WR, Rodgers KS. 2003. Effects of habitat, wave exposure, and marine protected area status on coral reef rish assemblages in teh Hawaiian archipelago. Coral Reefs 22:291-305.

Garpe KC, Yahya SAS, Lindahl U, Ohman MC. 2006. Long-term effects of the 1998 coral bleaching event on reef fish assemblages Mar Ecol Prog Ser 315:237-247.

Global Diving & Salvage. 2013. Volume two. Technical approach-evaluation factor 3. Shipwrecks removal at Palmyra Atoll and Kingman Reef. Solicitation #: F12PS01171. Global Diving & Salvage, Inc., Seattle, WA.

Haggerty JA, Schlanger SO, Silva IP. 1982. Late Cretaceous and Eocene volcanism in the southern Line Islands and implications for hotspot theory. Geology 10:433-437.

Hall RJ, Belisle AA, Sileo L. 1983. Residues of petroleum hydrocarbons in tissues of sea turtles exposed to the Ixtoc I oil spill. J Wildl Dis 19(2):106-109.

IncidentNews. 2013. F/V Hui Feng No. 1, Palmyra Atoll, Pacific Ocean, 1991-Jun-19 [online]. Office of Responce and Restoration, National Ocean Service, National Oceanic and Atmospheric Administration. [Cited 5/8/13.] Available from: http://incidentnews.noaa.gov/incident/6817.

IWC. 2012. Ship strike database, 2010 summary [online database]. International Whaling Commission, Cambridge, UK. Updated 2/1/12. [Accessed 5/9/13.] Available from: http://iwc.int/index.php?cID=872&cType=document.

Jensen A, Silber G. 2004. Large whale ship strike database. NOAA technical memorandum NMFS-OPR-25. Office of Protected Resources, National Marine Fisheries Service, Silver Spring, MD.

Jones GP, McCormick MI, Srinivasan M, Eagle JV. 2004. Coral decline threatens fish biodiversity in marine reserves. PNAS 101(21):8251-8253.

Kelly LW, Barott KL, Dinsdale E, Friedlander AM, Nosrat B, Obura D, Sala E, Sandin SA, Smith JE, Vermeij MJA, Williams GJ, Willner D, Rohwer F. 2012. Black reefs: iron-induced phase shifts on coral reefs. ISME 6:638-649.

Kenyon JC, Maragos JE, Wilkinson CB. 2010. Characterization of the coral communities at Kingman Reef in the remote central Pacific Ocean. Atoll research bulletin no. 584. National Museum of Natural History, Smithsonian Institution, Washington, DC.

Langmead O, Chadwick-Furman NE. 1999. Marginal tentacles of the corallimorpharian *Rhodactis rhodosoma*. 1. Role in competition for space. Mar Biol 134:479-489.

Lawrence A. 2013. Personal communication (e-mail exchange with K. Hurley, Windward, regarding noise levels of air compressors, diesel power hydraulic unit, and cutoff saw). Salvage Engineer, Global Diving & Salvage, Inc., Seattle, WA. May 8-9, 2013.

Leatherwood S, McDonald D, Baird RW, Scott MD. 1989. The false killer whale, *Pseudorca crassidens* (Owen, 1846): a summary of information available through 1988. Tech report 89-001. Oceans Unlimited, San Diego, CA.

Maragos J, Friedlander AM, Godwin S, Musburger C, Tsuda R, Flint E, Pantos O, Ayotte P, Sala E, Sandin SA, McTee S, Siciliano D, Obura D. 2008. US coral reefs in the Line and Phoenix Islands, central Pacific Ocean: status, threats and significance. In: Riegl B, Dodge RE, eds, Coral reefs of the USA. Vol 1, Coral Reefs of the World. New York, NY. Springer, New York, NY, pp 643-654. Available from: http://link.springer.com/book/10.1007/978-1-4020-6847-8/page/1#.

Martien K, Baird RW, Hedrick NM, Gorgone AM, Thieleking JL, McSweeney DJ, Robertson KM, Webster DA. 2011. Population structure of island-associated dolphins: evidence from mitochondrial and microsatellite markers for common bottlenose dolphins (*Tursiops truncatus*) around the main Hawaiian Islands. Mar Mam Sci 28(3):E208-E232.

MCBI. 2008. Kingman Reef factsheet [online]. Marine Conservation Biology Institute, Bellevue, WA. [Cited 5/8/13.] Available from: http://mcbi.marine-conservation.org/what/what_pdfs/Kingman_Factsheet.pdf.

Meyer AL. 2013a. Personal communication (e-mail exchange and summary of Skype conversation on May 6 with K. Hurley, Windward: sightings of marine mammals, applicable regulations, cultural and economic implications, NEPA requirements, green and hawksbill turtle consultation, coral growth on debris, terrestrial impacts, bird habitat, reef-building coral species, suspended sediment, motor noise, corallimorph, details of wreck removal). Wildlife Refuge Manager, Palmyra Atoll and Kingman Reef National Wildlife Refuges, US Fish and Wildlife Service. May 6, 2013.

Meyer AL. 2013b. Personal communication (e-mail exchange with K. Hurley, Windward, regarding impact on bristle-thighed curlews, wreck removal action alternatives, presence of *Acanthaster planci* and fleshy algae). Wildlife Refuge Manager, Palmyra Atoll and Kingman Reef National Wildlife Refuges, US Fish and Wildlife Service. May 1-11, 2013.

Meyer AL. 2013c. Personal communication (e-mail exchange with K. Hurley, Windward: seasonal preference of habitat use by turtles and marine mammals at Palmyra Atoll). Wildlife Refuge Manager, Palmyra Atoll and Kingman Reef National Wildlife Refuges, US Fish and Wildlife Service. May 9, 2013.

Meyer AL. 2013d. Personal communication (e-mail exchange with K. Hurley, Windward: threatened and endangered species in shipwreck removal area). Wildlife Refuge Manager, Palmyra Atoll and Kingman Reef National Wildlife Refuges, US Fish and Wildlife Service. May 1, 2013.

Miller J, Maragos J, Brainard R, Asher J, Vargas-Angel B, Kenyon J, Schroeder R, Richards B, Nadon M, Vroom P, Hall A, Keenan E, Timmers M, Gove J, Smith E, Weiss J, Lundblad E, Ferguson S, Lichowski F, Rooney J. 2008. The state of coral reef ecosystems of the Pacific Remote Island areas. In: Waddell JE, Clarke AM, eds, The state of coral reef ecosystems of the United States and Pacific Freely Associated States: 2008. NOAA technical memorandum NOS NCCOS 73. Silver Spring, MD. NOAA/NCCOS Center for Coastal Monitoring and Assessment, National Oceanic and Atmospheric Administration, Silver Spring, MD, pp 353-386.

Moore E, Lyday S, Roletto J, Litle K, Parrish JK, Nevins H, Harvey J, Moretenson J, Greig D, Piazza M, Hermance A, Lee D, Adams D, Allen SL, Kell S. 2009. Entanglements of marine mammals and seabirds in central California and the north-west coast of the United States 2001-2005. Mar Poll Bull 58:1045-1051.

NMFS. 2004. Cruise report, *Oscar Elton Sette*, cruise 04-04, 21 March-9 April 2004. Pacific Island Fisheries Science Center, National Marine Fisheries Service, Honolulu, HI.

NMFS. 2007. Recovery plan for the Hawaiian monk seal (*Monachus schauinslandi*). Second revision. National Marine Fisheries Service, Silver Spring, MD.

NMFS, USFWS. 1998. Recovery plan for US Pacific populations of the hawksbill turtle (*Eretmochelys imbricata*). National Marine Fisheries Service, Silver Spring, MD.

NOAA. 2008. NOAA RNC® (raster navigational chart) downloads [online]. Office of Coast Survey, National Oceanic and Atmospheric Administration, Silver Spring, MD. [Cited 5/20/13.] Available from: http://www.nauticalcharts.noaa.gov/mcd/Raster/download_agreement.htm.

NOAA Fisheries. 2011. Threats to marine turtles. Office of Protected Resources, species information [online]. National Marine Fisheries Service, National Oceanic and Atmospheric Administration, Silver Spring, MD. Updated 8/15/11. Available from: http://www.nmfs.noaa.gov/pr/species/turtles/threats.htm.

NOAA Fisheries. 2012a. Bottlenose dolphin (*Tursiops truncatus*). Office of Protected Resources, species information [online]. National Marine Fisheries Service, National Oceanic and Atmospheric Administration, Silver Spring, MD. Available from: http://www.nmfs.noaa.gov/pr/species/mammals/cetaceans/bottlenosedolphin.htm.

NOAA Fisheries. 2012b. Hawaiian monk seal (*Monachus schauinslandi*). Office of Protected Resources, species information [online]. National Marine Fisheries Service, National Oceanic and Atmospheric Administration, Silver Spring, MD. Available from: http://www.nmfs.noaa.gov/pr/species/mammals/pinnipeds/hawaiianmonkseal.htm.

NOAA Fisheries. 2012c. Melon-headed whale (*Peponocephala electra*). Office of Protected Resources, species information [online]. National Marine Fisheries Service, National Oceanic and Atmospheric Administration, Silver Spring, MD. Updated 12/12/12. Available from: http://www.nmfs.noaa.gov/pr/species/mammals/cetaceans/melonheadedwhale.htm.

NOAA Fisheries. 2012d. Short-finned pilot whale (*Globicephala macrorhynchus*). Office of Protected Resources, species information [online]. National Marine Fisheries

Service, National Oceanic and Atmospheric Administration, Silver Spring, MD. Available from: http://www.nmfs.noaa.gov/pr/species/mammals/cetaceans/pilotwhale_shortfinned.htm.

NOAA Fisheries. 2012e. Spinner dolphin (*Stenella longirostris*). Office of Protected Resources, species information [online]. National Marine Fisheries Service, National Oceanic and Atmospheric Administration, Silver Spring, MD. Updated 12/12/12. Available from: http://www.nmfs.noaa.gov/pr/species/mammals/cetaceans/spinnerdolphin.htm.

NOAA Fisheries. 2013. Melon-headed whale, scientific name: *Peponocephala electra* [online]. Pacific Islands Regional Office, NOAA Fisheries Service, National Oceanic and Atmospheric Administration, Honolulu, HI. [Cited 5/8/13.] Available from: http://www.fpir.noaa.gov/PRD/prd_melonheaded.html.

Norström AV, Nyström M, Lokrantz J, Folke C. 2009. Alternative states on coral reefs: beyond coral-macroalgal phase shifts. Mar Ecol Prog Ser 376:295-306.

Palmer RA. 2008. GeoPedia: Shipwreck at Kingman Reef. National Geographic Magazine [online], 6/13/08. National Geographic Society, Washington, DC. Available from: http://ngm.nationalgeographic.com/geopedia/Kingman_Reef.

Richardson TH, Richardson JI, Donnelly M, compilers. 1990. Proceedings of the tenth annual workshop on sea turtle biology and conservation, February 20-24, 1990, Hilton Head Island, South Carolina. NOAA tech memo NMFS-SEFC-278. Southeast Fisheries Center, National Marine Fisheries Service, Miami, FL.

Richardson WJ, Greene CR, Jr, Malme CI, Thomson DH. 1995. Marine mammals and noise. Academic Press, Inc., San Diego, CA.

Roch MA, Brandes TS, Patel B, Barkley Y, Baumann-Pickering S, Soldevilla MS. 2011. Automated extraction of odontocete whistle contours. J Acoust Soc Am 130(4):2212-2223.

Samuel Y, Morreale SJ, Clark CW, Greene CH, Richmond ME. 2005. Underwater, low-frequency noise in a coastal sea turtle habitat. J Acoust Soc Am 117(3):1465-1472.

Sandin SA, Smith JE, DeMartini EE, Dinsdale E, Donner SD, Friedlander AM, Konotchick T, Malay M, Maragos JE, Obura D, Pantos O, Paulay G, Richie M, Rohwer F, Schroeder RE, Walsh S, Jackson JBC, Knowlton N, Sala E. 2008. Baselines and degradation of coral reefs in the northern Line Islands. Plos ONE 3(2):E1548.

Sara G, Dean JM, D'Amato D, Buscaino G, Oliveri A, Genovese S, Ferro S, Buffa G, Lo Martire M, Mazzola S. 2007. Effect of boat noise on the behaviour of bluefin tuna *Thunnus thynnus* in the Mediterranean Sea. Mar Ecol Prog Ser 331:243-253.

Scholik AR, Yan HY. 2002. Effects of boat noise on the auditory sensitivity of the fathead minnow, *Pimephales promelas*. Envir Biol Fish 63:203-209.

Simard Y, Lepage R, Gervaise C. 2010. Anthropogenic sound exposure of marine mammals from seaways: Estimates for Lower St. Lawrence Seaway, eastern Canada. App Acoust 71:1093-1098.

Southall BL, Bowles AE, Ellison WT, Finneran JT, Gentry RL, Greene CR, Jr, Kastak D, Ketten DR, Miller JH, Nachtigall PE, Richardson WJ, Thomas JA, Tyack PL. 2007. Aquatic mammals. Marine mammal noise exposure criteria: initial scientific recommendations. Western Illinois University, Macomb, IL.

Stacey PJ, Leatherwood S, Baird RW. 1994. *Pseudorca crassidens* (Owen, 1846). Mammal Spec 456:1-6.

Sterling EJ, McFadden K, Holmes E, Vintinner K, Arengo F, Naro-Maciel E. [in press]. Ecology and conservation of marine turtles in a foraging ground in the central Pacific. Chel Cons Biol.

Syms C, Jones GP. 2000. Disturbance, habitat structure, and the dynamics of a coral-reef fish community. Ecology 81(10):2714-2729.

Timmers MA, Bird CE, Skillings DJ, Smouse PE, Toonen RJ. 2012. There's no place like home: crown-of-thorns outbreaks in the central Pacific are regionally derived and independent events. Plos ONE 7(2):e31159.

USFWS. 1987. Recovery plan for the Alabama beach mouse (*Peromyscus polionotus ammobates*), Perdido Key beach mouse (*P. p. trissyllepsis*), and Choctawhatchee beach mouse (*P. p. allophrys*). US Fish and Wildlife Service, Southeast Region, Atlanta, GA.

USFWS. 2008. NEPA documentation requirements: CX versus EA versus EIS. US Fish and Wildlife Service National Wildlife Refuge System, Pacific Region, Portland, OR.

USFWS. 2011a. Final environmental impact statement: Palmyra Atoll National Wildlife Refuge rat eradication project. US Fish and Wildlife Service, Pacific Region, Portland, OR.

USFWS. 2011b. Kingman Reef National Wildlife Refuge wildlife [online]. US Fish and Wildlife Service, Pacific Region, Washington, DC. Updated 3/3/11. [Cited 5/8/13.] Available from: http://www.fws.gov/kingmanreef/wildlife.html.

USFWS. 2011c. Palmyra Atoll and Kingman Reef National Wildlife Refuges planning update number 1, March 2011. Pacific Reefs National Wildlife Refuge Complex, US Fish and Wildlife Service, Honolulu, HI.

USFWS. 2011d. Welcome to Kingman Reef National Wildlife Refuge [online]. US Fish and Wildlife Service, Pacific Region, Washington, DC. Updated 3/3/11. [Cited 5/8/13.] Available from: http://www.fws.gov/kingmanreef/index.html.

USFWS. 2013. Pacific Remote Islands Marine National Monument (map). US Fish and Wildlife Service National Wildlife Refuge Sustem, Washington, DC.

USGS. 2012. The Palmyra Atoll Research Consortium. Fact sheet 2012-3002. US Geological Survey, Western Ecological Research Center, Sacramento, CA.

Weilgart LS. 2007. The impacts of anthropogenic ocean noise on cetaceans and implications for management. Can J Zool 85:1091-1116.

Williams GJ, Maragos JE, Davy SK. 2008. Characterization of the coral communities at Palmyra Atoll in the remote central Pacific Ocean. Atoll research bulletin no. 557. National Museum of Natural History, Smithsonian Institution, Washington, DC.

Williams I, Zamzow J, Lino K, Ferguson M, Donham E. 2012. Status of coral reef fish assemblages and benthic condition around Guam: a report based on underwater visual surveys in Guam and the Mariana Archipelago, April – June 2011. Pacific Islands Fisheries Science Center, National Marine Fisheries Servide, National Oceanic and Atmospheric Administration, Honolulu, HI.

Williams RT. 1991. Acrorhagi, catch tentacles, and sweeper tentacles: a synopsis of ''aggression'' of actiniarian and scleractinian corals. Hydrobiologia 216/217:539-545.

Work TM, Aeby GS, Maragos JE. 2008. Phase shift from a coral to a corallimorph-dominated reef associated with a shipwreck on Palmyra Atoll. Plos ONE 3(8):e2989.

Youle M. 2011. Shipwreck microbiology. Small Things Considered: The Microbe Blog, October 3, 2011 [online]. Elio Schaechter and Associates. [Cited 7/1/13.] Available from: http://schaechter.asmblog.org/schaechter/2011/10/shipwreck-microbiology.html.

Zgliczynski BJ, Williams ID, Schroeder RE, Nadon MO, Richards BL, Sandin SA. 2013. The IUCN Red List of Threatened Species: an assessment of coral reef fishes in the US Pacific Islands. Coral Reefs [DOI 10.1007/s00338-013-1018-0].