magazine
Vol 13 2012

World Association of Zoos and Aquariums
WAZA | *United for Conservation*®

Fighting Extinction

1935 77 YEARS 2012

The red wolf (*Canis rufus*) was extirpated in the wild and only survived in human care; its threat status was subsequently reduced from Extinct in the Wild thanks to the reintroduction of captive-bred animals. | © John Froschauer/Point Defiance Zoo & Aquarium

Contents

World Association of Zoos and Aquariums
WAZA | *United for Conservation*®

IUCN | Founding Member

Editorial
Markus Gusset & Gerald Dick 1

Przewalski's Horse Reintroduction to Mongolia: Status and Outlook
Chris Walzer, Petra Kaczensky, Waltraut Zimmermann & Christian Stauffer 3

The Black-footed Ferret: Into the Night
Paul E. Marinari 7

Efforts to Restore the California Condor to the Wild
Michael Wallace 10

The Arabian Oryx: Saved, yet...
Mark R. Stanley Price 15

The European Bison: A Species Saved from Extirpation
Wanda Olech 19

Extirpated in the Wild: Recovering the Red Wolf
William Waddell & David Rabon Jr..... 22

The Fall and Rise of the Scimitar-horned Oryx
Tania Gilbert, Tim Woodfine, William Houston, John Newby & Khaled Zahzah 25

The Père David's Deer: Clinging on by a Cloven Hoof
Neil R. Maddison, Jiang Zhigang & Maria Boyd 29

The Wyoming Toad: Partnerships for Recovery
Val Hornyak 33

The Fall and Rise of the Yarqon Bleak
Menachem Goren 36

Controlled Propagation of the Socorro Isopod
Brian K. Lang, Stephen M. Shuster & Rebecca Houtman 39

Imprint

Editors:
Markus Gusset & Gerald Dick
WAZA Executive Office
IUCN Conservation Centre
Rue Mauverney 28
CH-1196 Gland
Switzerland
phone: **+41 22 999 07 90**
fax: **+41 22 999 07 91**

Layout and typesetting:
michal@sky.cz
Print:
Agentura NP, Staré Město, Czech Republic

Edition: 700 copies

© WAZA 2012

Printed on FSC paper.

This edition of WAZA Magazine is also available on www.waza.org.

© Janusz Sochacki

ISSN: 2074-4528

Markus Gusset[1] & Gerald Dick[2]

Editorial

The Red List of Threatened Species, compiled by the International Union for Conservation of Nature (IUCN), is widely recognised as the most comprehensive, objective global approach for evaluating the conservation status of animal and plant species. Each species assessed is assigned to one of eight different categories (see figure), based on a series of quantitative criteria. Species classified as Vulnerable, Endangered and Critically Endangered are regarded as threatened; Extinct in the Wild means that these species are known only to survive in human care.

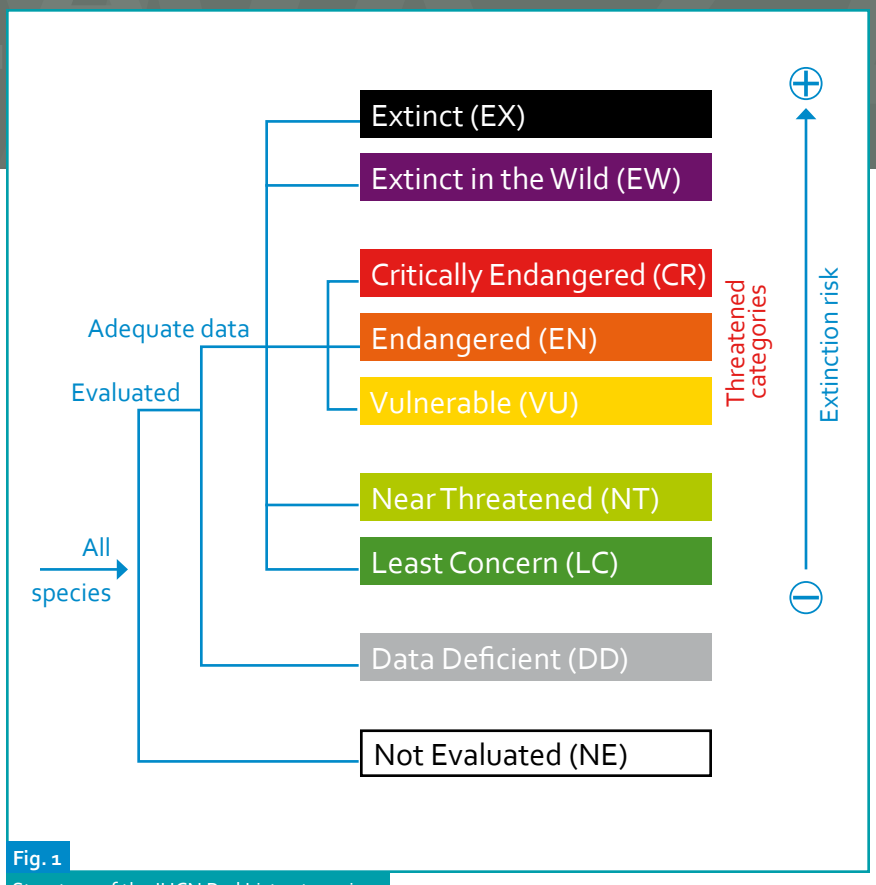

Fig. 1
Structure of the IUCN Red List categories.
© IUCN

There were 68 species that underwent an improvement in conservation status according to a recent assessment of the status of the world's vertebrates on the IUCN Red List (Hoffmann *et al.* 2010; *Science* 330: 1503–1509), all but four due to conservation measures. For these 64 species, conservation breeding was implemented as a major or minor conservation action that led to an improvement during the period of change in 16 and three species, respectively. Therefore, according to Hoffmann *et al.* (2010), 19 of the 64 species showing genuine improvement in IUCN Red List status due to conservation measures benefitted from conservation breeding.

These figures were subsequently contested (Balmford *et al.* 2011; *Science* 332: 1149–1150) and updated (Conde *et al.* 2011; *Science* 332: 1150–1151): there were 13 instead of 16 species identified for which conservation breeding was implemented as a major conservation action. According to Conde *et al.* (2011), for at least nine of these 13 species, zoos and aquariums also provided substantial logistical, technical and/or financial support. Overall, it seems that conservation breeding in zoos and aquariums has played a role in the recovery of one-quarter of those vertebrate species whose threat status was reduced according to the IUCN Red List.

Breeding animals in human care followed by reintroducing them back into the wild was one of the most frequently cited conservation actions that led to improvements in IUCN Red List status (Hoffmann *et al.* 2010). For birds, conservation breeding and reintroduction helped prevent the extinction of six out of 16 species that would probably have gone extinct in the absence of conservation measures (Butchart *et al.* 2006; *Oryx* 40: 266–278). For mammals, conservation breeding and reintroduction were more successful in improving conservation status than other conservation actions (Hayward 2011; *Biodivers. Conserv.* 20: 2563–2573) and contributed to the genuine improvement in IUCN Red List status of nine species (Hoffmann *et al.* 2011; *Phil. Trans. R. Soc. B* 366: 2598–2610).

According to the above-mentioned evaluation (Hoffmann *et al.* 2010, 2011; Conde *et al.* 2011), species previously classified as Extinct in the Wild that have improved in IUCN Red List status thanks to the reintroduction of captive-bred animals include the Przewalski's horse (*Equus ferus przewalskii*), black-footed ferret (*Mustela nigripes*) and California condor (*Gymnogyps californianus*). Thanks to the same conservation actions, the threat status of the Arabian oryx (*Oryx leucoryx*), European bison (*Bison bonasus*) and red wolf (*Canis rufus*) was reduced from Extinct in the Wild already before the time period considered.

1 WAZA Conservation Officer & International Studbook Coordinator
2 WAZA Executive Director

There are 33 animal species currently classified as Extinct in the Wild on the IUCN Red List (see table). Examples include the scimitar-horned oryx (*Oryx dammah*), Père David's deer (*Elaphurus davidianus*), Wyoming toad (*Anaxyrus baxteri*), Yarqon bleak (*Acanthobrama telavivensis*) and Socorro isopod (*Thermosphaeroma thermophilum*). Thirty-one of these species are actively bred in zoos, aquariums and other animal propagation facilities, which prevent their outright extinction; 17 species are managed in a studbook-based breeding programme. Zoological institutions are uniquely placed to contribute to the conservation of species that are no longer found in the wild, with reintroduction efforts using captive-bred animals already being implemented for six species classified as Extinct in the Wild.

In this edition of the WAZA Magazine, we have compiled cases where zoos and aquariums have made unique contributions to fighting extinction of those species most urgently in need of conservation action; that is, species classified as Extinct in the Wild on the IUCN Red List. Examples of such interactive *ex situ* and *in situ* population management include the 11 species mentioned in this Editorial; they were either reclassified recently (Hoffmann *et al.* 2010, 2011; Conde *et al.* 2011) or before the time period considered in that evaluation, or reintroduction efforts driven by zoological institutions have been implemented that hopefully will qualify them for reclassification soon.

Animal species classified as Extinct in the Wild on the IUCN Red List (version 2011.2), with an indication of whether the species is actively bred in human care, is managed in a studbook-based breeding programme and is being reintroduced.

Scientific name	Common name	Breeding	Management	Reintroduction
Acanthobrama telavivensis	Yarqon bleak	Yes	No	Yes
Ameca splendens	Butterfly goodeid	Yes	No	No
Anaxyrus baxteri	Wyoming toad	Yes	Yes	Yes
Aylacostoma chloroticum	(Tropical freshwater snail)	Yes	No	No
Aylacostoma guaraniticum	(Tropical freshwater snail)	Yes	No	No
Aylacostoma stigmaticum	(Tropical freshwater snail)	Yes	No	No
Corvus hawaiiensis	Hawaiian crow	Yes	No	No
Cyprinodon alvarezi	Potosi pupfish	Yes	No	No
Cyprinodon longidorsalis	La Palma pupfish	Yes	No	No
Elaphurus davidianus	Père David's deer	Yes	Yes	Yes
Gallirallus owstoni	Guam rail	Yes	Yes	Yes
Leptogryllus deceptor	Oahu deceptor bush cricket	No	No	No
Megupsilon aporus	Catarina pupfish	Yes	No	No
Mitu mitu	Alagoas curassow	Yes	No	No
Nectophrynoides asperginis	Kihansi spray toad	Yes	Yes	No
Nilssonia nigricans	Black softshell turtle	No	No	No
Oryx dammah	Scimitar-horned oryx	Yes	Yes	Yes
Partula dentifera	(Polynesian tree snail)	Yes	Yes	No
Partula faba	(Polynesian tree snail)	Yes	Yes	No
Partula hebe	(Polynesian tree snail)	Yes	Yes	No
Partula mirabilis	(Moorean viviparous tree snail)	Yes	Yes	No
Partula mooreana	(Moorean viviparous tree snail)	Yes	Yes	No
Partula nodosa	(Polynesian tree snail)	Yes	Yes	No
Partula rosea	(Polynesian tree snail)	Yes	Yes	No
Partula suturalis	(Moorean viviparous tree snail)	Yes	Yes	No
Partula tohiveana	(Moorean viviparous tree snail)	Yes	Yes	No
Partula tristis	(Polynesian tree snail)	Yes	Yes	No
Partula varia	(Polynesian tree snail)	Yes	Yes	No
Skiffia francesae	Golden skiffia	Yes	No	No
Stenodus leucichthys	Beloribitsa	Yes	No	No
Thermosphaeroma thermophilum	Socorro isopod	Yes	No	Yes
Yssichromis sp. nov. 'argens'	(Cichlid fish)	Yes	No	No
Zenaida graysoni	Socorro dove	Yes	Yes	No

Information compiled from the IUCN Red List, International Species Information System (ISIS), IUCN/SSC Conservation Breeding Specialist Group (CBSG), systematic Internet searches and personal communications

Aichi Biodiversity Target 12 of the United Nations *Strategic Plan for Biodiversity 2011–2020* states that "by 2020 the extinction of known threatened species has been prevented and their conservation status, particularly of those most in decline, has been improved and sustained". We hope that this edition of the WAZA Magazine will substantially strengthen the case for the world zoo and aquarium community to play an increasingly recognised role in the conservation policies of governments, non-governmental organisations and multilateral environmental agreements.

The establishment of select, targeted captive populations with the goal of reintroducing species in the wild may offer valuable opportunities once impacts in their native habitat are brought under control. | Hoffmann** et al.* ***2010

Chris Walzer[1,2]*, Petra Kaczensky[1,2], Waltraut Zimmermann[3] & Christian Stauffer[4]

Przewalski's Horse Reintroduction to Mongolia: Status and Outlook

Summary

The last record of the Przewalski's horse (*Equus ferus przewalskii*) in the wild occurred in the late 1960s in south-western Mongolia. Thereafter no more wild horses were observed and in 1996 the species was classified as Extinct in the Wild on the IUCN Red List of Threatened Species. The reasons for the extinction were seen in the combined effects of pasture competition with livestock and overhunting. At this point in time the species survived solely in captivity due to breeding based on 13 founder animals. Today the Mongolian population again consists of some 350 wild individuals, and the species was subsequently down-listed to Critically Endangered in 2008 and Endangered in 2011. A self-sustaining financial base in conjunction with dedicated training and empowerment of local scientists and residents constitute essential prerequisites for the project's future.

Fig. 1 A small harem group of Przewalski's horses near Takhiin Tal in the Great Gobi B Strictly Protected Area. © Chris Walzer/International Takhi Group

Introduction

The first documentation of Przewalski's-type wild horses date from more than 20,000 years ago. Rock engravings, paintings and decorated tools dating from 20,000–9,000 BC were discovered in European caves. Historically, wild horses ranged from Western Europe over the Russian steppes east to Kazakhstan, Mongolia and northern China. The first written accounts of the Przewalski's horse (*Equus ferus przewalskii*) were recorded by the Tibetan monk Bodowa around 900 AD. In the *Secret History of the Mongols*, there is a reference to wild horses that caused Genghis Khan's horse to rear up and throw him to the ground in 1226. The Przewalski's horse is still absent from Linnaeus' *Systema Naturae* (1758) and remained essentially unknown in the West until John Bell, a Scottish doctor in the service of Tsar Peter the Great, in 1719–1722 observed the species within the area of 85–97° E and 43–50° N (present-day Chinese–Mongolian border). Subsequently, Colonel Nikolai Mikailovich Przewalski (1839–1888), a renowned explorer, obtained the skull and hide of a horse shot some 80 km north of Gutschen on the Chinese–Russian border. These were examined at the Zoological Museum of the Academy of Science in Saint Petersburg by I. S. Poliakov, who concluded that they were a wild horse, which he gave the official name *Equus przewalskii* (Poliakov 1881). Present-day taxonomy places the Przewalski's horse as a subspecies of *Equus ferus* (Fig. 1).

1 Research Institute of Wildlife Ecology, Department of Integrative Biology and Evolution, University of Veterinary Medicine, Vienna, Austria
2 International Takhi Group – Mongolia, Ulaanbaatar, Mongolia
3 Cologne Zoo, Cologne, Germany
4 International Takhi Group – Switzerland, c/o Zurich Wilderness Park Foundation, Sihlwald, Switzerland
* E-mail for correspondence: chris.walzer@fiwi.at

The last wild population of Przewalski's horses – called takhi in Mongolian – survived until recently in south-western Mongolia and adjacent China in the provinces of Gansu, Xinjiang and Inner Mongolia. The last recorded sightings of the takhi in the wild occurred in the late 1960s north of the Tachiin Shaar Nuruu in the Dzungarian Gobi in south-western Mongolia. Thereafter no more wild takhi were observed and the species was subsequently (1996) classified as Extinct in the Wild on the IUCN Red List of Threatened Species. The reasons for the extinction of the takhi were seen in the combined effects of pasture competition with livestock and overhunting.

At this point in time the species survived solely in captivity due to breeding based on 13 founder animals. Subsequent to the establishment of the International Przewalski's Horse Studbook at Prague Zoo in the Czech Republic in 1959, the North American Breeders Group in the 1970s (which became the Species Survival Plan for the Przewalski's Horse) and the initiation of a European Endangered Species Programme in 1986 under the auspices of Cologne Zoo in Germany, the captive population grew to over 1,000 individuals by the mid-1980s. In the early 1990s, reintroduction efforts started simultaneously in Mongolia, China, Kazakhstan and Ukraine. However, today Mongolia is the only country where true wild populations exist within their historical range. Reintroductions in Mongolia began in the Gobi Desert around Takhiin Tal in the Great Gobi B Strictly Protected Area (9,000 km²) and in the mountain steppe of Hustai National Park (570 km²) in 1992. A third potential reintroduction site, Khomiin Tal (2,500 km²) in the Great Lakes Depression, was established in 2004, as a buffer zone to the Khar Us Nuur National Park.

The Takhiin Tal Reintroduction Project

With Mongolian independence in 1990, the Takhiin Tal project was initiated with the support of various international sponsors. By the late 1990s project leadership and management was overhauled with research and scientific data firmly integrated into the decision-making process. In 1999 the International Takhi Group (www.savethewildhorse.org) was established as a non-governmental organisation to continue and extend this project in accordance with the *IUCN Reintroduction Guidelines*. The vision of the International Takhi Group is the integral protection of the Gobi habitat and to conserve the Great Gobi B Strictly Protected Area (SPA) as a biosphere reserve in the sense of IUCN.

This SPA chosen as the reintroduction site was established in 1975 and encompasses some 9,000 km² of desert steppes and semi-deserts. Plains in the east and rolling hills to the west dominate the landscape, with the mighty Altai Mountains flanking the park in the north. The Takhin Shar Naruu mountain range in the south forms the international border with China. Elevations range from 1,000 to 2,840 m. The climate is continental with long cold winters and short hot summers. Average annual temperature is a frigid 1 °C and average annual rainfall a mere 96 mm. Snow cover lasts an average of 97 days. Defining factor for this landscape is that rain and snowfall are highly variable in space and time. Open water (rivers and springs) is unevenly distributed, with almost no water in the central and western part of the SPA.

In 1992 the first group of captive-born takhi were selected from various European zoos and then airlifted to Takhiin Tal at the edge of the SPA. The logistics were a nightmare at the time and the journey for the takhi was long and exhausting. Five years later a harem group was released into the wild from the adaptation enclosures, and in 1999 the first foals were successfully raised in the wild. In the following years several further airlifts occurred and a total of 88 takhi from various European zoos were brought to the Gobi (Slotta-Bachmayr *et al.* 2004). In the summer of 2009 some 150 takhi roamed over 3,000 km² in the SPA (Fig. 2). Initially largely confined to the north-eastern corner of the SPA, range use of the reintroduced takhi population increased gradually. In 2005 one harem group was successfully translocated to the Takhiin Us water point, about 120 km west of the original release site, to speed up the expansion of the distribution range within the area.

The Gobi is prone to large inter-annual environmental fluctuations, but the winter 2009/2010 was particularly severe. Millions of livestock died and the takhi population in the Gobi crashed. Herders in and around the SPA lost on average 67% of their livestock. Snow depth varied locally, resulting in livestock losses following an east–west gradient. Herders had few possibilities for evasion, as competition for available winter camps was high. Takhi used three different winter ranges, two in the east and one in the west. Losses averaged 60%, but differed hugely between east and west. Space use of takhi was extremely conservative, as groups did not attempt to venture beyond their known home ranges. In contrast, Asiatic wild asses seemed to have suffered few losses by shifting their range westwards. The catastrophic winter 2009/2010 provided a textbook example for how vulnerable small and spatially confined populations are in an environment prone to environmental fluctuations and catastrophes. This highlights the need for multiple reintroduction sites with spatially dispersed populations for reintroduced takhi, and a landscape-level approach beyond protected area boundaries (Kaczensky *et al.* 2011a).

Fig. 2
Two Przewalski's horse bachelor males sparing in the Great Gobi B Strictly Protected Area.
© Petra Kaczensky/International Takhi Group

Public, media and zoological institutions' interest focused heavily on the international transports from Europe to Mongolia. However, the establishment of a permanent and self-sustaining field station with the necessary infrastructure (solar power, laboratory, office, vehicles and petrol) and communication abilities (VHF communication, satellite-based e-mail and telephone) proved equally important. In 2004 the Takhiin Tal camp hosted the second international workshop on the reintroduction of the takhi. In 2005 facilities at the Takhiin Tal camp were further upgraded with the construction of the SPA headquarters funded by the Austrian Ministry of the Environment and the International Takhi Group. Facilities now allow year-round living and research. The camp provides training possibilities for young Mongolian and international scientists, has created local employment options and is run by well-trained and motivated local staff.

For reintroduction programmes to be successful in the long run, they necessarily must be embedded in a broader context of ecosystem conservation. Over the years the Takhiin Tal project greatly expanded on various fronts. Early scientific input was focused on the takhi and concentrated on determining causes of death and low reproductive rates (Robert *et al.* 2005). The elucidation of the effects of an endemic parasite disease (piroplasmosis) on the population and subsequent management changes led to remediation of this deadly problem. Takhi were fitted with satellite tracking collars in order to determine their position, home range and habitat preferences. Home range sizes based on telemetry showed that individual takhi groups cover non-exclusive areas of 152 to 826 km². Simultaneously, the Asiatic wild ass and grey wolf have been studied with these methods in the shared habitat (Kaczensky *et al.* 2008). Satellite-based technologies provide the backbone for all habitat-related project issues. At the onset data collection was restricted to the eastern part of the SPA, but today the spatial scale encompasses the entire Gobi region in Mongolia and northern Xingjian in China.

Research has also focused on socio-economic aspects of local herders, their impact on the SPA and its surroundings, and their attitude towards wildlife and management issues. In 2005 training workshops on the construction and application of fuel-efficient stoves were conducted in order to reduce illegal saxaul and juniper collection. In 2006 a concept for environmental education for children in Takhiin Tal was developed, yet still needs to be implemented. In 2007, with support from the Italian region

of Lombardia and under the lead of the Instituto Oikos, a trans-boundary project in collaboration with the Xinjiang Institute of Ecology and Geography of the Chinese Academy of Sciences was initiated. This project aims to support rural communities of nomadic pastoralists living in the trans-boundary area of the Dzungarian Gobi in China and Mongolia and investigates the possibilities of expanding the ranges of the takhi and Asiatic wild ass across the international border. Local livelihoods will be improved through the strengthening of international collaboration on sustainable development issues and the integration of an environmental component in the respective development processes. The project currently seeks additional funds to further strengthen local involvement and community development in the project area.

Conclusions

Mongolia, often called the "land without fences", provides the last remaining refuge for a number of migratory species that require large areas of habitat. This region also supports a growing human population, including a large number of livestock herders, who maintain a fragile grip on survival after enduring the political and economic upheaval wrought by the collapse of the socialist command economy. With Mongolia's transition to a privatised market economy, more people and exploitative economic activities – notably mining and road construction – will further impact environmental security and habitat needs of the wildlife in the Gobi region.

Starting out initially as a single-species reintroduction project, the magnitude of the conservation activities has greatly expanded in recent years. Seen from a species perspective, integrated research projects dealing with the Asiatic wild ass, grey wolf, wild Bactrian camel, various rodent species and the vegetation have been implemented. Whereas the initial reintroduction efforts were driven mostly by health concerns for the takhi, the disciplinary scope has significantly broadened with zoologists, biologists, botanists and remote sensing experts performing habitat mapping and assessment, and with community development experts establishing a socio-economic framework for future project development. Away from the field, an important aspect for project advancement has proven to be lobbying activities both in Ulaanbaatar and among the international community. Lobbying activities not only enhance information flow and political support for the project, but also create collaborative opportunities and necessary alliances (Kaczensky *et al.* 2011b).

With the free-ranging takhi population at the three sites growing – the population is currently estimated to consist of some 350 individuals – the species was initially re-assessed in 2008. Using IUCN's categories and criteria, the takhi has been down-listed in the IUCN Red List from Extinct in the Wild at the onset of the project to Critically Endangered (2008) and most recently to Endangered (2011). Comprehensive trans-disciplinary monitoring and research are the foundation for management decisions at the present, but a sustainable financial base, capacity building and empowerment of local scientists and residents constitute the future of this programme.

References

- Kaczensky, P., Ganbaatar, O., von Wehrden, H. & Walzer, C. (2008) Resource selection by sympatric wild equids in the Mongolian Gobi. *Journal of Applied Ecology* 45: 1762–1769.
- Kaczensky, P., Ganbataar, O., Altansukh, N., Enkhsaikhan, N., Stauffer, C. & Walzer, C. (2011a) The danger of having all your eggs in one basket – Winter crash of the re-introduced Przewalski's horses in the Mongolian Gobi. *PLoS ONE* 6: e28057.
- Kaczensky, P., Walzer, C., Ganbataar, O., Enkhsaikhan, N., Altansukh, N. & Stauffer, C. (2011b) Reintroduction of the "extinct in the wild" Przewalski's horse to the Mongolian Gobi. In: *Global Re-introduction Perspectives: 2011* (ed. by Soorae, P. S.), pp. 199–204. Abu Dhabi: IUCN/SSC Re-introduction Specialist Group.
- Robert, N., Walzer, C., Rüegg, S. R., Kaczensky, P., Ganbaatar, O. & Stauffer, C. (2005) Pathologic findings in reintroduced Przewalski's horses (*Equus caballus przewalskii*) in southwestern Mongolia. *Journal of Zoo and Wildlife Medicine* 36: 273–285.
- Slotta-Bachmayr, L., Boegel, R., Kaczensky, P., Stauffer, C. & Walzer, C. (2004) Use of population viability analysis to identify management priorities and success in reintroducing Przewalski's horses to southwestern Mongolia. *Journal of Wildlife Management* 68: 790–798.

Paul E. Marinari[1]*

The Black-footed Ferret: Into the Night

Summary

The black-footed ferret (*Mustela nigripes*) has come precariously close to extinction several times within the past 50 years and was classified as Extinct in the Wild on the IUCN Red List of Threatened Species in 1996. The last known wild population of black-footed ferrets was discovered on a prairie dog complex in central Wyoming during the early 1980s, providing one last hope for the species' survival. A successful captive breeding programme spearheaded by the Wyoming Game and Fish Department, US Fish and Wildlife Service and members of the Association of Zoos and Aquariums increased our scientific knowledge of black-footed ferrets and provided enough captive-born kits for reintroduction to begin in 1991. Since then, more than 2,900 black-footed ferrets have been released and more than 700 individuals now exist in nature. The species was reclassified as Endangered in 2008 and, due to the continued support and expertise of zoos, has a fighting chance to be down-listed from the US Endangered Species List by 2020.

Introduction

The black-footed ferret (*Mustela nigripes*) is one of three ferret species found in the world and the only ferret native to North America. This charismatic, yet feisty, solitary, nocturnal member of the weasel family has long been considered one of the most endangered mammals on Earth (Fig. 1). The black-footed ferret is a specialist carnivore, with prairie dogs making up over 90% of its diet. Black-footed ferrets also use prairie dog burrows to raise their young and escape from predators, such as coyotes, owls and badgers.

Fig. 1
A black-footed ferret emerges from a prairie dog burrow.
© USFWS

Throughout its history, the black-footed ferret has always been an elusive and secretive animal. It was officially described in 1851 by John James Audubon and Reverend John Bachmann, but had long been used by Native Americans during ceremonial activities. Large-scale poisoning campaigns increased in frequency during the early 1900s, reducing prairie dog numbers and fragmenting colonies. Additionally, sylvatic plague, an exotic disease, was spreading east, devastating both prairie dogs and black-footed ferrets. The black-footed ferret was being "attacked" from the east and the west. Was the species doomed for extinction?

Against All Odds

Despite the loss of habitat and the spread of plague, a population of black-footed ferrets was discovered in Mellette County, South Dakota, in 1964. This discovery provided an opportunity for biologists to increase their knowledge of the species (Linder & Hillman 1973). In 1971 a few individuals were trapped to initiate a captive breeding programme. Although kits were produced, no young were successfully reared. By 1979 the last captive animal had died and no black-footed ferrets were being seen in the wild. Had this unique animal vanished forever?

1 Center for Species Survival, Smithsonian Conservation Biology Institute, National Zoological Park, Front Royal, VA, USA

* E-mail for correspondence: marinarip@si.edu

On 26 September 1981, a ranch dog named Shep was able to do what countless biologists could not – provide conclusive evidence that black-footed ferrets still roamed the prairie night. Shep's owners, John and Lucille Hogg, brought Shep's find to a local taxidermist who identified it as a rare black-footed ferret! The events of that night and those that followed over subsequent months would set the stage for more than 30 years of intensive conservation management that has included diverse stakeholders, including zoos.

This discovery of a black-footed ferret population on a prairie dog complex outside of Meeteetse, Wyoming, gave the conservation world hope that the black-footed ferret was not destined for extinction. From 1981 to 1984 biologists conducted routine spotlight surveys and used radio telemetry to increase their knowledge about black-footed ferret life history and behaviour (Forrest *et al.* 1988). In 1985 sylvatic plague was confirmed throughout the prairie dog complex and field biologists reported an alarming decrease in the number of black-footed ferrets being detected.

It was once again decided that captive breeding would be necessary to prevent extinction. From 1985 to 1987 a total of 24 individual black-footed ferrets were trapped and brought into captivity; the species was subsequently (1996) classified as Extinct in the Wild on the IUCN Red List of Threatened Species. Unfortunately, six of those animals died of canine distemper. The Wyoming Game and Fish Department and the US Fish and Wildlife Service began the captive breeding programme with only 18 surviving black-footed ferrets; seven males and 11 females. A total of eight kits from two litters was produced in 1987. Seven of these kits survived. Finally, the black-footed ferret was on the road to recovery.

Ex Situ **Meets** *In Situ*

The 1988 US Fish and Wildlife Service's Black-footed Ferret Recovery Plan had four main goals: (1) produce as many kits as possible (Fig. 2), (2) initiate a multi-institutional propagation programme, (3) investigate assisted reproductive techniques, and (4) reintroduce black-footed ferrets at multiple locations within their historical range. The Association of Zoos and Aquariums (AZA) has been a valuable partner in black-footed ferret recovery for decades, bringing expertise in animal care and propagation of endangered species, financial and political support and a huge visitor base. These components have been instrumental in assisting the US Fish and Wildlife Service to meet overall recovery goals. The Black-footed Ferret Species Survival Plan (SSP) is one of many subcommittees that make up the Black-footed Ferret Recovery Implementation Team. This collection of federal, state and tribal governments, zoos, private landowners and non-profit organisations work cooperatively to reproduce, release and recover black-footed ferrets to the prairies of the United States, Mexico and Canada.

The two primary objectives of the Black-footed Ferret SSP are to: (1) manage the captive population to minimise loss of genetic diversity, and (2) produce as many kits as possible for reintroduction purposes. Additionally, partner zoos provide education and outreach opportunities pertaining to the prairie ecosystem for thousands of visitors. As the captive population continued to increase during the late 1980s, additional SSP facilities began housing the managed population of breeding stock. The Wyoming Game and Fish Department's captive breeding effort was joined by that of the Smithsonian National Zoological Park (and its Conservation Biology Institute), Omaha's Henry Doorly Zoo, Louisville Zoo, Cheyenne Mountain Zoo, Phoenix Zoo and Toronto Zoo.

Fig. 2
A 40-day old kit born at the US Fish and Wildlife Service's National Black-footed Ferret Conservation Center.
© USFWS

In 1996, due to budget constraints and expansion of reintroduction efforts to additional states within the historical range of the black-footed ferret, the US Fish and Wildlife Service assumed operational responsibility of the colony formerly managed by the Wyoming Game and Fish Department. The National Black-footed Ferret Conservation Center was born. Utilising an adaptive management approach, the SSP began addressing various research and management questions pertaining to vaccine development, disease, genetics, animal husbandry, nutrition, enrichment and reproductive biology (Howard *et al.* 2006; Marinari & Kreeger 2006).

In 1991 enough black-footed ferrets were being produced in captivity that reintroduction of the species could begin. The Black-footed Ferret SSP along with other AZA groups have assisted reintroduction efforts by producing animals as well as supporting various field survey efforts. In 2001 a biomedical survey was initiated to investigate the health of wild populations in several states. Information collected during this survey has led to more efficient management of the captive population and increased collaboration among programme partners. To date, the SSP has produced almost 8,000 kits, with nearly 3,000 individuals being reintroduced at 19 locations in eight US states, Mexico and Canada.

The Black-footed Ferret SSP has been developing and implementing assisted reproductive techniques for decades. The continued banking of semen in the Genome Resource Bank and development of laparoscopic intrauterine artificial insemination has captured the genetic material of animals that would have otherwise been lost. More than 150 kits have been produced by artificial insemination using both fresh as well as frozen/thawed spermatozoa. Incorporation of the Genome Resource Bank into active captive breeding management has further minimised the loss of genetic diversity over time. Because the black-footed ferret has low levels of heterozygosity, it has been essential that the SSP utilises all of the resources and expertise within AZA and the Population Management Center (Garelle *et al.* 2011).

Thanks to a grant from AZA's Conservation Endowment Fund, Chicago's Lincoln Park Zoo has initiated a unique partnership with the Northern Cheyenne Reservation in Montana. Some of the areas of focus include sharing scientific expertise and resources, as well as the critical need for enhanced community empowerment in close proximity to the reintroduction site. New professional development programmes for educators and summer scientist youth programmes are being designed to develop the next generation of wildlife biologists. Other AZA institutions have developed their own black-footed ferret-based curricula.

The road to recovery has been long, slow and often times bumpy. The last act of this drama has not yet been written. Undoubtedly, AZA members and institutions have provided valuable knowledge, resources and inspiration to partners within the black-footed ferret recovery programme and those who support our efforts. The primary obstacles to black-footed ferret recovery are the same issues that forced biologist to make the tough decision to bring animals into captivity in the early 1970s and again in the mid-1980s: lack of suitable habitat and disease. The SSP played a pivotal role working with the Merial Corporation in development of a safe and effective canine distemper vaccine for black-footed ferrets. Other Black-footed Ferret Recovery Implementation Team partners have developed a safe and effective sylvatic plague vaccine for black-footed ferrets and innovative research involving development of an oral sylvatic plague vaccine for prairie dogs is underway. Hopefully, this will be the missing management tool needed to recover black-footed ferrets on large tracts of federal and tribal lands as well as areas of private land suitable for recovery of the species.

Will the black-footed ferret ever be recovered? I think if there is one species that has a chance, it is the black-footed ferret. Today there are approximately 700 to 750 black-footed ferrets in at least seven states within the historical range, including populations in Canada and Mexico. As further evidence of progress, the species was down-listed to Endangered status in 2008.

We Can All Do More

As the sun sets on North America's western prairie and a purple and orange sky gives way to the dark of night, a small yet resilient animal emerges from its underground world. For this is the time of the black-footed ferret. Persistence is not futile. And, although no one individual can recover a species from the brink of extinction, biologists like the late JoGayle Howard, Elizabeth Williams and Tom Thorne have left an indelible mark on the conservation world. They, together with dedicated members of AZA, have shown that endangered does not have to result in extinction, that the importance of the individual is surpassed by the survival of the species. The zoo community and all members of the Black-footed Ferret Recovery Implementation Team will ensure that these wonders of Wyoming, these mustelids from Meeteetse, will forever go into the night.

References

- Forrest, S. C., Biggins, D. E., Richardson, L., Clark, T. W., Campbell III, T. M., Fagerstone, K. A. & Thorne, E. T. (1988) Population attributes for the black-footed ferret (*Mustela nigripes*) at Meeteetse, Wyoming, 1981–1985. *Journal of Mammalogy* 69: 261–273.
- Garelle, D., Marinari, P. & Lynch, C. (2011) *Black-footed Ferret (*Mustela nigripes*) Population Analysis and Breeding and Transfer Plan*. Silver Spring: AZA.
- Howard, J. G., Santymire, R. M., Marinari, P. E., Kreeger, J. S., Williamson, L. & Wildt, D. E. (2006) Use of reproductive technology for black-footed ferret recovery. In: *Recovery of the Black-footed Ferret: Progress and Continuing Challenges* (ed. by Roelle, J. E., Miller, B. J., Godbey, J. L. & Biggins, D. E.), pp. 28–36. Reston: US Geological Survey.
- Linder, R. L. & Hillman, C. N. (1973) *Proceedings of the Black-footed Ferret and Prairie Dog Workshop*. Brookings: South Dakota State University.
- Marinari, P. E. & Kreeger, J. S. (2006) An adaptive management approach for black-footed ferrets in captivity. In: *Recovery of the Black-footed Ferret: Progress and Continuing Challenges* (ed. by Roelle, J. E., Miller, B. J., Godbey, J. L. & Biggins, D. E.), pp. 23–27. Reston: US Geological Survey.

Michael Wallace[1]*

Efforts to Restore the California Condor to the Wild

Summary

By the early 1980s new studies using radio telemetry and moult patterns to identify individuals indicated that only 21 California condors (*Gymnogyps californianus*) existed, with five pairs sporadically breeding. With continuous and poorly understood mortality, the decision was made to capture the remaining animals and in 1987 all 27 birds were placed in the protective custody of the San Diego and Los Angeles zoos, at which time the species was considered Extinct in the Wild. Enough offspring were produced in this small, genetically managed group to begin releases to the wild in 1992. Using techniques developed with other cathartid vultures as surrogates, California condors have been reintroduced into their former range at five release sites in the USA and Mexico. Currently classified as Critically Endangered on the IUCN Red List of Threatened Species, this brings the overall population close to the recovery goal of a total of 450 birds in three disjunct populations, one in captivity and two in the wild.

Introduction

The California condor (*Gymnogyps californianus*) is one of the most impressive American birds, mostly because of their enormous size and their beauty in flight. Its scavenger lifestyle, sociality and intelligence make it one of the more interesting species to study. Weighing 9 to 12 kg and standing nearly a meter tall, they dwarf other "large" avian species like golden eagles and turkey vultures that often compete for the large animal carcasses on which they specialise, such as deer, sea lions, large domestic animals, cetaceans and pinnipeds.

Casting a 3.2 m shadow, the sight and sound (if close enough) of a soaring California condor leaves an indelible memory on any high altitude hiker as they did for eons with Native Americans who revered them in folklore and traditional use of their feathers and images in ceremony. The species survived the Pleistocene when a large mega-fauna food supply supported a guild of other large avian scavengers that did not survive the massive extinctions of the epoch. Probably numbering in the hundreds and possibly thousands before the 1800s, they were reduced drastically over the last two centuries, likely because of the decline of their marine-based food supply along the coast and an increase of human-caused mortality factors such as shooting and lead and other poisoning. It was nearly driven to extinction by the early 1980s due to excessive human-caused mortality as opposed to a lack of reproduction. At that time the drastic and hotly debated action of capturing all remaining 21 birds for captive breeding was thought to be the only way of saving the species (Snyder & Snyder 2000); by 1987 the California condor was considered Extinct in the Wild. The gamble paid off. Their population has increased in numbers from the original captive group of 27 California condors in 1987 to just under 400 animals today (Fig. 1).

Breeding Strategy

Caught by canon net and pit traps through 1986 and1987, they were placed in Los Angeles Zoo and San Diego Zoo according to sex and family line that was determined by the genetics department at San Diego Zoo. They were arranged in pairs based on family line to maximise outbreeding and placed in large aviary breeding facilities similar to successful captive breeding programmes with Andean condors. We are fortunate that the species is behaviourally plastic and adjusted rapidly to the captive environment, beginning to breed within a couple of years and sometimes within only months of being placed in appropriate housing conditions. Eventually, members of all of the family lines were successfully bred in captivity.

1 San Diego Zoo Institute for Conservation Research, San Diego Zoo Global, Escondido, CA, USA
* E-mail for correspondence: mwraptor@gmail.com

Fig. 1
Ventral view of mature California condor showing tag and transmitter.
© Mike Wallace/San Diego Zoo Global

In the wild, both Andean and California condors lay one egg, on average, every two years due to the long parental dependency period. If the single clutch egg is lost through predation or accident early in the 57-day incubation period, the pair will often "recycle" and lay a replacement egg in about 30 days. Capitalising on this trait, we removed the first, and sometimes the second, egg laid to artificial incubators for hatching and were able to get the captive pairs to lay more eggs than they normally would. Called double or triple clutching, we were able to increase the reproductive rate four to six times; a significant breakthrough in saving this normally slow reproducing bird. With the genetic status of each individual known, we were able to maximise out-breeding when forming pairs that normally mate for life in the wild.

To maintain adequate chick behaviour during the ontogeny of the extra chicks, life-like puppets were employed to mimic the behaviour and movements of parents in this highly social species. This artificial parental substitution effectively bridged the gap until, at about six months of age, the fledgling could be introduced to a more socially natural group of older birds that included an adult mentor to help maintain social order. Another tool employed to increase success in new, inexperienced pairs was the use of fake eggs to allow them risk-free time to learn the temporal rhythm of swapping incubation duties in unproven mates. When incubation behaviour improved to an adequate level, the real egg was surreptitiously replaced. Risk to genetically valuable eggs or hatchlings was also reduced by allowing many of the new pairs to first practice the hatching process with less endangered and available Andean condor eggs in their first reproductive efforts. Over several seasons competent pairs were eventually allowed to raise their own offspring. Also, early on in the programme, the eggs of genetically valuable pairs were often reared artificially or given to more reliable pairs. The goal was to maximise production while concurrently training pairs to be reliable enough to raise their own young without undue risk to the eggs or chicks.

To ensure the best possible pairings, meetings of the Species Survival Plan by the Association of Zoos and Aquariums continue annually to guide the arranging of new pairs and maintain as near a genetic balance as possible between the four California condor breeding facilities: The Peregrine Fund's World Center for Birds of Prey in Boise, Idaho, San Diego Zoo Safari Park, Los Angeles Zoo and Oregon Zoo. Chipultapec Zoo in Mexico will soon have two pairs and will be producing young to support the reintroduction programme in that country. The effort to bring family lines to parity continues to this day at the release sites and captive breeding centres, with an annual meeting to line up which birds and eggs need to be transferred to specific release sites in light of continual changes in each metapopulation due to varying survivorship and new recruitment from wild nests.

Research on Surrogates

The effort to recover this highly endangered species really began with research on other cathartid vultures. The first Andean condors were bred in captivity at San Diego Zoo in the 1940s and 1950s. Then, with an importation of 11 Andean condors from Argentina, the Patuxent Wildlife Research Center at Patuxent, Maryland, created a breeding colony to further refine breeding techniques. Research to develop release techniques for condors began in 1979 with black vultures and turkey vultures in Florida. Because new world or cathartid vultures "urohydrate" on their legs and feet to cool themselves through evaporation, traditional leg bands for identification cannot be used since they allow dangerous faecal build-up that can damage their legs to the point of foot loss. Numbered wing tags attached to the patagial on the smaller vultures proved efficient and safe, allowing individual identification while flying or perched. Lightweight radio transmitters were later incorporated into the wing tag and the tag/transmitter combination was successfully tested on free-flying Andean condors during research to develop release techniques for them in Peru. All served as surrogate species to work out trapping, transport and husbandry techniques for California condors long before efforts were directly applied to North America's largest flying land bird (Fig. 2).

Release Strategies and Techniques

Before releases could begin, seven offspring (96% heterozygosity) were needed as genetic back-up from each pair. This basically ensured a duplication of genetic material was retained in the relative safety of captivity before any members of that family line could be released to the higher risk conditions in the wild.

In 1979 successful release experiments on 33 black and turkey vultures in Florida led to an appreciation of the differences in the two species and the need for further tests with Andean condors; a species much more similar to California condors in size, anatomy, physiology, behaviour and ecology. Eleven Andean condors were produced in North American zoos and released into the low mountains of the Cerro Illescas in Peru. Between 1980 and 1984 the one-year old birds were taught to forage on their own using the techniques developed with the Florida vultures, in which typical carrion of the area was placed out under the cover of darkness at varying distances and directions to stimulate natural foraging. The proffered food gave sufficient time and support for the juvenile birds to successfully integrate with the wild population.

The key to the success of the Peruvian Andean condor release experiments relied on the existence of a healthy wild population for which the young birds to socially integrate with and learn from (Wallace & Temple 1987). In California all of the knowledgeable members of the population had been removed from the wild and were too valuable genetically to be placed again at the risk of lead poisoning and other dangers. Also, their tradition of feeding on hunter-killed carcasses was too dangerous for a new population of inexperienced California condors to emulate. Without an existing wild population of condors in the California environment, naive young animals would need to be taught

Fig. 2
Pair of California condors perched in territory cliffs showing tag and transmitter.
© Mike Wallace/San Diego Zoo Global

basic foraging techniques by their human handlers. Similar in concept to the techniques used to maintain California condors isolated from human contact early on in the process with puppets, one-way glass and video cameras, released California condors were monitored at night time and with telescopes from blinds in the day. One important goal in the reintroduction of this highly social species is to develop an initial group of California condors in the release area with good natural-like behaviours that subsequently released California condors can emulate (Clark *et al.* 2007).

Mortality Factors

To further test more specific release techniques, Andean condors were again used as a test subject when 13 were released between 1988 and 1990 within the Los Padres National Forest; an area previously inhabited by California condors and likely to be our first release site when there were sufficient birds. Only young females were released because of their similarity in weight and aerodynamics and to ensure that the exotic species could not successfully breed in the California habitat should re-trapping prove difficult. This effort was most helpful for better understanding the specifics of condor releases such as tracking with radio telemetry in the chaparral habitat, training a team of biologists and working out the coordination of participating parties. Of the 13 Andean condors released over the three-year period, there was one death due to a power line collision.

Although a small sample size, the test with Andean condors in California gave us confidence to move ahead with the California programme and in 1992 the remaining birds were trapped and joined other Andean condors being released in Colombia (Wallace 1989). With sufficient young California condors being produced at the two breeding centres, by 1992 we were able to release 13 California condors between 1992 and 1994. Over those two years four California condors were killed by power line collisions; a mortality rate much higher than what we experienced with the Andean condors or what could be sustained in the long term. On analysis it appeared that the newly released California condors developed a habit of using power pole wood cross arms, commonly found throughout the release area, as day perches and night time roosts. These convenient perches were found in condor habitats all over southern California.

The decision was made to trap the remaining eight free California condors and experiment with aversion training on the pre-released fledgling birds in the controlled zoo environment. Mock power poles were set up in the large pre-release pens, with the perching surfaces fitted with bare wire that connected to a standard livestock shocker that produced a mild, but noticeable, electric charge when contact was made. Time-laps cameras recorded the identification tags and behaviour of the pre-release birds as they chose between the electrified and more natural perches placed within the pens. They quickly learned to stay off the simulated power pole perches and, fortunately, retained that behaviour after release to the wild. With a 95% reduction in time spent around power poles in the wild, the mortality rate caused by wire collisions dropped to under 5% and we were able to continue the reintroduction programme. Power pole aversion training continues to be an important component in the rearing process of California condor release candidates.

Recognised in the early 1980s as an important mortality factor for California condors, lead poisoning remains a significant hindrance to the full recovery of the species throughout its range. Legislation against the use of lead bullets for big game hunting, the availability of reasonably priced lead alternatives for lead bullets and intense education in other parts of their range are recent developments slowly reducing this issue. Change in hunter attitudes and behaviour has been gradual and not without tremendous effort on the part of programme participants from gathering blood lead level data in the birds, lobbying government and legislative representatives to educate hunters directly. Hopefully, the issue will be sufficiently regulated to make self-sustaining California condor populations feasible within a decade or so.

Emerging as a significant disease in the USA in the last decade, West Nile virus is lethal for many birds including California condors. Before it arrived in California, the Condor Recovery Team approached the Center for Disease Control in Washington, DC, for help. Within a year they were able to produce a genetic-based vaccine specific for California condors. Administered over a three-month period beginning at one month of age, the vaccine protects the birds nearly 100%. We have lost several California condors to the virus both in captivity and in the wild that were not vaccinated. Immunity titres are checked on a yearly basis and natural immunity seems to be building in the population with repeated exposure in the wild.

Recovery Plan

California condors have been released at five sites in California, Arizona and Mexico. The US Fish and Wildlife Service sponsored California Condor Recovery Plan, written by the Condor Recovery Team, states that before reclassification to threatened status can occur, three disjunct populations of California condors are needed, numbering at least 150 birds each; two in the wild and one in captivity. Each population should have approximately 15 breeding pairs and have a positive rate of increase (Kiff *et al.* 1996). At the moment there are nearly 400 California condors in existence, with about 200 in captivity and 200 in the wild at five release sites. Roughly ten chicks are produced in the wild and 40 chicks in captivity at four facilities annually. The species is currently classified as Critically Endangered on the IUCN Red List of Threatened Species. The programme is not without obstacles and challenges but seems to be on track overall for recovery of the species, as outlined in the Recovery Plan, within the next two decades.

References

- Clark, M., Wallace, M. P. & David, C. (2007) Rearing California condors for release using a modified puppet-rearing technique. In: *California Condors in the 21st Century* (ed. by Mee, A. & Hall, L. S.), pp. 213–226. Cambridge: Nuttall Ornithological Club.
- Kiff, L. F., Mesta, R. I. & Wallace, M. P. (1996) *Recovery Plan for the California Condor*. Portland: US Fish and Wildlife Service.
- Snyder, N. & Snyder, H. (2000) *The California Condor: A Saga of Natural History and Conservation*. San Diego: Academic Press.
- Wallace, M. (1989) Andean condor experimental releases to enhance California condor recovery. *Endangered Species Update* 6: 1–4.
- Wallace, M. P. & Temple, S. A. (1987) Releasing captive-reared Andean condors to the wild. *Journal of Wildlife Management* 51: 541–550.

Mark R. Stanley Price[1]*

The Arabian Oryx: Saved, yet…

Summary

In 2011 the Arabian oryx (*Oryx leucoryx*), once Extinct in the Wild, was re-assessed under IUCN Red List of Threatened Species criteria to be Vulnerable rather than Endangered, an unprecedented improvement in a species' fortunes. The key criterion was at least 250 mature individuals in the wild for five years. This article looks at the numbers and locations of the populations contributing to this criterion, and the conditions under which they are kept. This leads to consideration of what constitutes "the wild" and the likely forthcoming dilemmas, as conservation solutions increasingly involve management interventions, with a general loss of "wildness". This has implications for populations kept indefinitely under confined or supported conditions. Irrespective of the Red Listing, the current "wild" Arabian oryx are still far short of the 5,000 individuals commonly accepted as a viable number for the long term. Is this, therefore, a realistic target number for any reintroduction of a large mammal?

Fig. 1
Male Arabian oryx grazing in Uruq Bani Ma'Arid, Saudi Arabia.
© Tim Wacher

Introduction

In mid-2011 the Arabian oryx (*Oryx leucoryx*) achieved an unprecedented conservation feat. Although known to be Extinct in the Wild since 1972, various reintroduction efforts allowed the species to be assessed from 1986 as Endangered on the IUCN Red List of Threatened Species. By 2006 the total population in the wild exceeded 1,000 individuals (Fig. 1), and was deemed to comprise at least 250 mature animals, the threshold – if maintained for five years – for downlisting to Vulnerable. This new status of Vulnerable was duly accorded in 2011. This success story is great cause for celebration, and hopefully it will be emulated by other species that are receiving intense conservation attention. But it is worth looking at some detail behind the new assessment, for it raises some fundamental questions.

The early story of the oryx is well known: how three individuals were captured in Operation Oryx in the Eastern Aden Protectorate (now within Yemen) in 1962, in anticipation of the species' predicted extirpation in the wild. Unfortunately, this became a reality in 1972 when in central Oman a hunting party killed the last known herd. However, the three captives were joined by a female from London Zoo (originally from Oman), two pairs from the private collection of the King of Saudi Arabia and one female gifted by the Ruler of Kuwait. All nine were eventually united at Maytag Zoo in Phoenix to constitute the World Herd. After a few years the bulk of the growing population was transferred to the care of the San Diego Zoological Society.

1 Wildlife Conservation Research Unit, Department of Zoology, University of Oxford, Oxford, UK & Al Ain Zoo, Al Ain, Abu Dhabi, United Arab Emirates

* E-mail for correspondence: mark.stanleyprice@zoo.ox.ac.uk

By the time Oman requested some oryx from the World Herd to release back into its deserts in 1979, the known captive population, principally in the USA, totalled some 1,100 individuals. There was no effective estimate then of numbers in the species' range states of the Arabian Peninsula, but there were evidently good populations in various royal and private collections. Since those days, the species has thrived in zoo collections, managed under collaborative agreements, with 94 in seven institutions in the USA (Fischer, personal communication, 2012), less than 100 in European zoos (Gilbert, personal communication, 2012) and about 100 in two collections in Israel (Saltz, personal communication, 2012), with further small numbers around the world. Within the former range states of the oryx, the General Secretariat for Conservation of the Arabian Oryx, based in Abu Dhabi, affirms that there are currently at least 4,800 in zoos, private collections and nature reserves in the United Arab Emirates, with significant numbers also in Saudi Arabia (1,166), Oman (644), Qatar (1,150), Bahrain (146), Jordan (71) and Syria (153).

So, the species is demographically more secure from extinction than it has been for many years – probably since unsustainable hunting of it in the wild escalated after 1945. These populations are kept under a variety of conditions, but all are confined by fencing, while the numbers kept together, the extent of space per animal and the degree of management support, mostly in the form of provision of shade, food and water, is variable. However, it is fair to say that these populations span the range of being intensively managed, lightly managed or conservation dependent (Redford *et al.* 2011). But only a fraction of these animals are contributing to the Red List assessment of Vulnerable. Where are these oryx and under what conditions are they living?

Saudi Arabia has the largest share of the population that was considered for the Red List assessment. Its reserve of Mahazat as-Sayd has been a fenced area of 2,200 km² since 1988. Its oryx population has varied widely, reaching a high of 614 in 2006, but in 2008 there were 378 living oryx while 159 died in that year. The periodic build-ups and crashes due to extremely dry conditions, despite management interventions, are well documented (Islam *et al.* 2010). Starting in 1995, 174 oryx were released in batches into the escarpment, gravel plain and sand dune area of Uruq Bani Ma'Arid, in southern Saudi Arabia: well-monitored over the years, this population was estimated in 2008 to be 100–200 strong (Cunningham 2010), living virtually independently of any support, moving between habitats according to season and climate in a totally unfenced situation. This population is truly in the wild, in the sense of being unfenced and unsupported, but its demographic performance is far from the level that the species could have achieved.

The situation in Oman is rather different. Releases of relatively small numbers of oryx through the 1980s resulted in an unconfined and unsupported population of at least 350 animals by 1996. These animals were closely monitored and they rapidly adapted to the waterless Jiddat-al-Harasis that has good shade and adequate grazing maintained, even in the absence of rain, through fog moisture sweeping in from the Arabian Sea (Stanley Price 1989). However, in 1996 the population came under intense pressure of illegal offtake, mostly through efforts at live capture, focussed on females; but the method used of chasing to exhaustion led to heavy mortalities. Faced with this situation, the authorities decided to round up as many remaining oryx as possible and confine them again in the existing pre-release facility, a 100 ha enclosure. About 50 animals may remain at large, but the bulk of the population remains confined within extended enclosures, in anticipation of completion of a 2,824 km² fenced area into which most of the current 380 oryx will be released (Jahdhami, personal communication, 2012). Through the early years, at least, the fenced reserve should provide adequate grazing, and shade is plentiful; it will be interesting to see if containment within this large fenced area will permit or prevent the true independence attained by the earlier population.

In Abu Dhabi, the 7,900 km² fenced reserve of Umm al Zumoul hosts approximately 400 oryx. While this appears a very low density, the enclosed habitat is almost entirely sand dunes, which are only suitable habitat for the species in winter when shade is not necessary. Consequently, this population is supported with food, water and shade (Chuven, personal communication, 2012).

The Environment Agency Abu Dhabi is currently providing oryx to Jordan for re-establishment in the Wadi Rum. Currently, there are 30 oryx with a further 20 due to follow in mid-2012. For the time being all are in an enclosure of 20 km², and supported, before the major commitment to release them into the unenclosed Wadi Rum is taken (Chuven, personal communication, 2012).

Israel released 111 oryx between 1997 and 2007 in three areas, with the aim of creating a metapopulation; in mid-2012 there were approximately 100 living freely in the wild, without any food support and using natural water sources (Saltz, personal communication, 2012).

Fig. 2
Mortality must be expected in any release into the unconfined wild: dead Arabian oryx in Uruq Bani Ma'Arid, Saudi Arabia.
© Tim Wacher

The Red List assessment was based on the free-living or least confined populations of Oman, Saudi Arabia, Abu Dhabi, Jordan and Israel. Today these populations total about 1,200, comfortably exceeding the threshold level of 250 mature individuals. Yet of this total, only the populations in Uruq Bani Ma'Arid of Saudi Arabia and in Israel are truly unconfined and unsupported: these are 300 oryx, only 25% of the 1,200. So, it appears that an animal maintained under conditions that would certainly not accord with the general view of "the wild" can contribute to being "in the wild" for the purposes of Red Listing assessment. This raises to me at least three fundamental questions.

Level of Support in the Wild

What level of support will be permitted "in the wild"? While we perceive animals to be "in the wild" when unconfined physically, this does not mean that they are not benefiting in some way from human support either directly or indirectly. The garden birds being fed on a bird table are being supported through the winter, yet they are subject without qualification to Red Listing assessments. Further, human activities that modify the landscape might be both beneficial and disadvantageous to species; if there is an unintended, collateral benefit, does this count as an indirect management support to the species?

This broader context is concordant with increasing awareness and acceptance that, in the modern world, there is rarely anything that is truly "wild" or "wilderness". This is because humans and our impacts are more and more omnipresent and, indeed, there is ever-increasing historical and archaeological evidence of early, widespread human activity: presumed primary forest in Ghana is now known to be even-aged re-growth many centuries old, and the "pristine" Amazon forest is providing new evidence of early cities and civilisations that collapsed with almost all physical evidence absorbed back into the forest and earth. Conservation is perforce tracking this change: we see interventionist approaches to saving rare species increasing, and an eruption of secure, fenced sanctuaries for rhinos in Africa, as well as for endangered species such as the hirola antelope. We can only assume that containment of vulnerable species will increase.

Implications of Containment

The second area is the implications of containing populations of large mammals. On the presumption that the animals within any limited area are to function as a population, then sex ratios will be near natural and breeding will take place. This sows the seeds of a future management problem, for ultimately carrying capacity will be reached. Desert antelopes are probably subject to low levels of predation, whether confined or not. Their main challenges are food and water. As numbers build up, management may well have to provide these to prevent stress and ultimately distressingly high mortality rates (Fig. 2). Ignoring these, on the basis that "this is natural in desert populations", is liable to criticism on welfare grounds. If intensive and costly management support and large-scale mortality are to be avoided, then physical destocking is necessary, and this will beg the questions of how can it be done effectively and where will the surplus animals go?

If an antelope population is at unnaturally high density, with little scope for animals to move off and retreat into secure isolation, then what is usually natural intra-specific aggression can become prevalent and escalate into being extremely damaging both to animals and infrastructure. We can only postulate the selective pressures on populations kept under such conditions, and presume that after several generations, the genotypes best adapted to contained conditions may diverge from those best suited to survival in the open desert. Does this matter? Will late 21st century oryx be mere facsimiles of their self-sufficient ancestors?

Fencing in the desert creates further inherent problems. As desert surfaces can be either very hard or very soft, there are often costly engineering issues to resolve and fence lines can be swamped by drifting sand. Further, fences are designed to prevent movement, and desert species survive precisely by moving in response to scattered and unpredictably sited rainstorms. A fenced area will be pressured by domestic and wild species trying to enter if it alone has received rain, while the more common situation will be of contained animals desperately trying to escape the fence to follow their natural responses to seek sites of recent rainfall. The massive die-offs of wild species against veterinary control fences in Botswana are lesson enough of the prospects in the desert, and the same consequences have already been evident at Mahazat as-Sayd.

Viability in the Wild and Implications for Reintroductions

Is the oryx anywhere close to attaining viability in the wild? Are there implications for reintroductions in general? Irrespective of the Vulnerable listing of the oryx, the species is undoubtedly so much better off now than, say, 20 years ago. But leaving this aside, are the current populations viable? The conventional conservation target of 5,000 individuals remains far off for the oryx population to be considered truly viable. Even if each current population is potentially a component of a metapopulation, the distance to 5,000 suggests we need more oryx at more sites, linked through fully inclusive, collaborative management. This is a major challenge, for has any reintroduced large mammal reached the level of 5,000 individuals that are unconfined and unsupported? If the answer is "no", and it seems an unlikely prospect in any current reintroduction, then perhaps we have to reconsider the roles and limitations of reintroduction as a conservation tool at least for large mammals.

Is the oryx continuing conservation story a model for other species? Indeed, it has many lessons, but the extreme conditions of its natural habitat of the Arabian deserts and its adaptive biology require it to roam over vast distances in patterns that may be both predictable through seasonal climate change and adventitious in response to rain. Is it not a paradox that its vast natural range supports one of the world's lowest densities of human occupation, yet oryx must be confined either through lack of space to meet all its habitat requirements or because its safety outside fences cannot be guaranteed? The oryx's new assessment of Vulnerable raises an issue for the critically important task of assessing species status and trend. This challenge will undoubtedly be explored and the system refined as necessary.

Could the oryx be the focus of a second challenge? The current fenced populations will inevitably face the problems that the pioneering Mahazat as-Sayd has experienced. As the species is demographically secure in the Arabian Peninsula, could effective progress towards a metapopulation of free-living and unsupported oryx be promoted by understanding and accepting risk, and taking more adventurous decisions – to let more oryx out onto unconfined lands, making best effort to ensure their security, while acknowledging that a low level of loss through illegal activity will not significantly impact the species' survival prospects? Could this approach lead to an oryx total herd of more than 1,200, living unsupported and not even Vulnerable? This would indeed be a grand challenge and achieving it a genuinely superb and unique conservation success.

Acknowledgements

It is a pleasure to thank the following for their willing contributions of information for this article: Justin Chuven, Stephen Bell, Martha Fischer, Tania Gilbert, Mansoor al Jahdhami, Yassir al Kharusi, David Mallon and David Saltz.

References

- Cunningham, P. (2010) Arabian oryx monitoring in Saudi Arabia: Uruq Bani Ma'arid and Mahazat as-Sayd protected areas – update. *Gnusletter* 28(2): 17–19.
- Islam, M. Z., Ismail, K. & Boug, A. (2010) Catastrophic die-off of globally threatened Arabian oryx and sand gazelle in the fenced protected area of the arid central Saudi Arabia. *Journal of Threatened Taxa* 2: 677–684.
- Redford, K. H., Amato, G., Baillie, J., Beldomenico, P., Bennett, E. L. *et al.* (2011) What does it mean to successfully conserve a (vertebrate) species? *BioScience* 61: 39–48.
- Stanley Price, M. R. (1989) *Animal Re-introductions: the Arabian Oryx in Oman*. Cambridge: Cambridge University Press.

Wanda Olech[1]*

The European Bison: A Species Saved from Extirpation

Summary

The European bison (*Bison bonasus*), or wisent, is a special mammal of the European continent. Around 90 years ago the species had almost vanished because we lost all natural populations; by 1919 the European bison was considered Extinct in the Wild and only 54 animals remained in captivity. At that time international efforts helped to save this charismatic mammal. Currently, there are more than 4,000 individuals spread in more than 200 herds all over the continent. The current challenges are to still increase population size, but the most important one is to manage the small gene pool of the species trough coordinated breeding in captivity and proper reintroductions. The European bison is currently classified as Vulnerable on the IUCN Red List of Threatened Species. International cooperation is assured and organised trough the European Bison Friends Society.

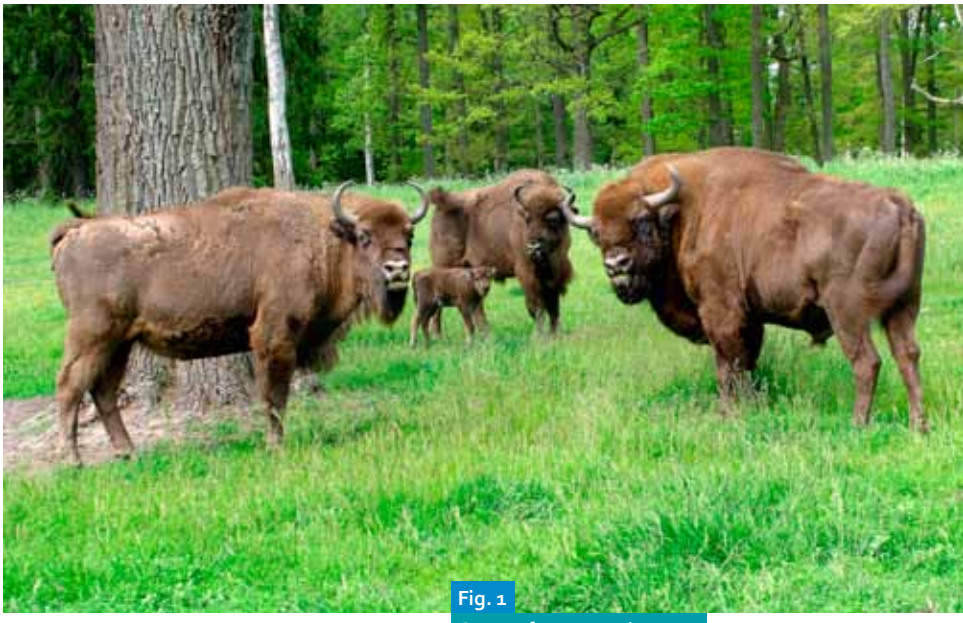

Fig. 1
Group of European bison.
© Mieczysław Hlawiczka

Introduction

The genus *Bison* is represented by two species, the European bison (*Bison bonasus*) and the American bison (*Bison bison*). The histories of both species are dramatic because both of them were saved from extinction at the very last moment. The European bison is Europe's largest terrestrial mammal, with a reddish-brown coat that blends well with the animals' surroundings. It is relatively easy to mistake a European bison for the trunk of a fallen tree. Also remarkable is their sexual size dimorphism, with males being markedly larger and heavier than females; a greater proportion between the hind- and forequarters of the body equipped with a hump gives the impressive appearance of males. The head is large and set low, with small ears and curved horns in both sexes. The muzzle of the European bison is black and its upper part is surrounded by white hair. European bison never roar and the term used for the noise they make is "grunt", which most frequently is used between mother and calf and during the rutting season.

The European bison is a ruminating herbivore well adapted to feeding on grass and fibrous fodder, consuming large amounts (up to 60 kg) and with little selectivity. This species uses pastures and needs forest ecosystems with a lot of open spaces for feeding. European bison are social, forming two types of herds: mixed groups of females and their calves led by an old cow, and groups of bulls (Fig. 1). Usually mixed groups do not exceed 20 animals and consequently the density of the species is rather low (Krasińska & Krasiński 2007).

1 Department of Genetics and Animal Breeding, Warsaw University of Life Sciences, Warsaw, Poland
* E-mail for correspondence: wanda_olech@sggw.pl

History of Species Recovery

The European bison is special from a genetic point of view. Its gene pool is very small, which causes serious concerns regarding genetic management. The reason for such low genetic variability is that the species has passed through population bottlenecks more than once. In the 19th century only two populations of the species remained – one in Białowieża Primeval Forest (*B. b. bonasus*) and another in the Caucasus Mountains (*B. b. caucasicus).* Both populations were rather small, respectively numbering about 700 and 2,000 animals. A major bottleneck occurred during and after World War I. Both wild populations disappeared and only a few animals survived in captivity; by 1919 the European bison was considered Extinct in the Wild.

In 1923, at the International Congress for Nature Protection in Paris, the Polish representative Jan Sztolcman delivered an "appeal on the necessity of saving the European bison". It was agreed to create, as quickly as possible, an international society with the goal of saving the European bison. The Society for the Protection of the European Bison was established and Kurt Priemel, director of Frankfurt Zoo, was elected as its chairman. The Society's first goal was to create a register of all living animals. Such a register, the European Bison Pedigree Book, was the first studbook for any wild species. After World War II the editorial office of the European Bison Pedigree Book was moved to Poland and the editorial work was conducted by Jan Żabiński, director of Warsaw Zoo. Since 1993 the editorial office of the European Bison Pedigree Book has been situated at Białowieza National Park.

The inventory done in 1924 showed only 54 (29 males and 25 females) living European bison with proven purity. Those individuals, as well as their known ancestors, were listed in the first edition of the European Bison Pedigree Book where every animal was assigned a name and number. The last animals living by the end of 1924 were mostly kept in estates of the European aristocracy – including seven at Pszczyna (Prince von Pless), ten at Woburn (Duke of Bedford), two at Boitzenburg (Count Arnim) and four at Scharbow (von Beyme). There were 28 animals in zoos (in Vienna, Amsterdam, Frankfurt, Berlin, Stockholm, London, Saint Petersburg and the reserve Askania Nova). A detailed pedigree analysis was first done by Slatis (1960). He found that all European bison (the whole population in 1954) were descendants of a small group of ancestors. He identified 12 unique genotypes as founders of the current population. Since then, in all subsequent analyses, this set of 12 founders has been used (Olech 1999; Pucek *et al.* 2004). Up to now genes of all of these 12 animals are represented in the present population of the species.

Small Gene Pool of the Species

The facts that the lowest number of European bison was 54 individuals and that the gene pool of contemporary European bison originates from only 12 founders are often mixed up, and seem to have confused even people working in genetics. A thorough analysis of the pedigree of the 54 animals alive in 1924 revealed that 28 animals at that time could be recognised as ancestors of the contemporary population. Seventeen of them were identified and their contribution explained 30 years later by Slatis (1960), but genes of the remaining 11 founders existed only at the beginning of the recovery programme. A comparison of the genetic structure of the European bison populations in 1924 and 1954 showed that these 11 potential founders had a considerable representation in 1924, equalling to 26.9% of the total gene pool (Olech 2009). Some of the potential founders died one or two years after the first inventory, but there were four founders represented by their progeny up to 1951. All those animals were kept in Woburn by the Duke of Bedford, who was very much involved in endangered species conservation. Among others he succeeded in breeding Père David's deer, but probably did not hold the European bison in high regard. This was unfortunate because for a species with such a small gene pool, the survival of this group could have been important for improving genetic variability.

Fig. 2
European bison with calves.
© Janusz Sochacki

Presently, the species is divided into two genetic lines: a pure lowland subspecies named Lowland line, and a second Lowland-Caucasian line with inclusion of genes from male no. 100, the only one representing the Caucasian subspecies. The Lowland

line is derived from seven founders, whereas the Lowland-Caucasian line stems from all 12 – seven common to both lines and five unique to the Lowland-Caucasian line. When comparing the contribution of the 12 founders, it is interesting to note considerable changes over time. In 1924 animals no. 42 and 45 together contributed only 5.6% to the total gene pool, but later (because of a large number of descendants) their representation increased to 45.2% in 1954, and to almost 84% in the contemporary Lowland line (Pucek *et al.* 2004). The opposite happened to the contribution of no. 100, whose initial contribution of more than 25% decreased to just 6% in the current Lowland-Caucasian line.

It is important for species conservation that the long period of breeding in captivity and the establishment of the European Bison Pedigree Book allow using pedigree data for large-scale analyses of the species' genetics. In the case of free-ranging herds, the pedigree data allow for determining the structure of the reintroduced population. It is also possible to calculate various coefficients like inbreeding. The average level of inbreeding for animals born recently equals to 48% for the Lowland line and 28.9% for the Lowland-Caucasian line. However, there are no serious signs of inbreeding depression in this species, although concerns about its negative influence remain. In fact, the only significant negative influence of inbreeding found up to now is lowered viability of young animals. What is interesting, although animals belonging to the Lowland line have a much higher level of inbreeding, no relation between inbreeding and mortality has been found for them. Current studies using genetic markers proved low levels of genetic variability in European bison populations; only half of the genetic variability observed in the closely related American bison.

Current Situation and Plan for the Future

After more than 80 years of efforts for the recovery of the species, its total number exceeds 4,000 individuals (4,431 at the end of 2010) both in the wild and in captivity (Fig. 2). Since there were no European bison living in the wild after 1919, the present distribution of the species is a result of efforts to restore animals in a number of European countries. By the end of 2011, there were 220 captive herds of European bison maintained in 29 European countries (breeding centres, reserves, zoos, etc.). Most breeders (83) are in Germany where more than 500 animals live. Herd sizes are variable and very small herds with two or three animals predominate. In this situation, a coordinated breeding programme is critically important for maintaining the gene pool of the species. The coordination for the whole of Europe is the main task of the European Bison Conservation Centre, established within the structure of the European Bison Friends Society. A part of the captive population in zoos is also included in the European Endangered Species Programme run by the European Association of Zoos and Aquaria.

The number of animals kept in captivity has steadily increased from 562 in 1960 to 1,497 by the end of 2011, including 440 Lowland line animals and 1,057 belonging to the Lowland-Caucasian line. The two genetic lines are separated in captivity and only 12 breeding stations keep animals belonging to both lines (76 animals altogether; 32 Lowland and 44 Lowland-Caucasian). Currently, there are 33 free-living herds; the formation of so many free-ranging populations should be regarded as a big success of the recovery programme. The European bison is currently listed as Vulnerable on the IUCN Red List of Threatened Species. Such a wide dispersion of the species may ensure its survival in case of unpredictable events at the local scale. Demographic and genetic deficiencies are dealt with by coordinated exchanges of animals.

References

- Krasińska, M. & Krasiński, Z. A. (2007) *European Bison: The Nature Monograph*. Białowieża: Mammal Research Institute, Polish Academy of Sciences.
- Olech, W. (1999) The number of ancestors and their contribution to European bison (*Bison bonasus* L.) population. *Annals of Warsaw Agricultural University, Animal Science* 35: 111–117.
- Olech, W. (2009) The changes of founders number and their contribution to the European bison population during 80 years of species restitution. *European Bison Conservation Newsletter* 2: 54–60.
- Pucek, Z., Belousova, I. P., Krasińska, M., Krasiński, Z. A. & Olech, W. (eds) (2004) *European Bison: Status Survey and Conservation Action Plan*. Gland: IUCN/SSC Bison Specialist Group.
- Slatis, H. M. (1960) An analysis of inbreeding in the European bison. *Genetics* 45: 275–287.

William Waddell[1]* & David Rabon Jr[2]

Extirpated in the Wild: Recovering the Red Wolf

Summary

The Red Wolf Recovery Programme represents one of the longest-standing partnerships involving an Association of Zoos and Aquariums animal conservation programme and US Fish and Wildlife Service recovery programme. Extinct in the Wild by 1980, the red wolf (*Canis rufus*) is currently classified as Critically Endangered on the IUCN Red List of Threatened Species. This year highlights several prominent anniversaries in red wolf conservation. It was 45 years ago when the red wolf was first listed as Endangered under provisions of the Endangered Species Preservation Act of 1967, a precursor to the Endangered Species Act of 1973 (as amended). Ten years later, after establishing a managed breeding programme, the first litter of captive red wolf pups was born. This year also marks 25 years since restoration efforts began, when red wolves were released at the Alligator River National Wildlife Refuge in north-eastern North Carolina in the autumn of 1987. These milestones provide perspective in that species recovery programmes are often measured by slow, incremental accomplishments requiring persistence and flexibility as new information and obstacles emerge.

Fig. 1
Red wolf.
© Seth Bynum/Point Defiance Zoo & Aquarium

Extirpation in the Wild

Red wolves (*Canis rufus*) occupied a diversity of habitat types throughout their historical range in the eastern and south-central United States (Fig. 1). As with many endangered species, altered and diminishing habitats would leave little room for sanctuary and press the red wolf into less than suitable environs. Widespread predator control programmes and relentless, indiscriminate killing devastated red wolf numbers, creating a problem that would be difficult for the species to overcome. By the time the US Fish and Wildlife Service intervened, the range of the species was confined to the coastal prairies and marshes of extreme south-eastern Texas and south-western Louisiana (USFWS 1990).

Preservation in the wild was given the highest priority, but the small and tenuous red wolf population also was hybridising with an eastwards expanding coyote population. The resulting mixture of canids was difficult to distinguish and further threatened the remaining red wolves with the loss of their genetic identity. The survival of the remnant red wolf population was uncertain, prompting programme officials to redirect their objective for the red wolf population from one of local preservation to planned extirpation in the wild. While the decision to remove the last red wolves appeared inevitable, it was done so within the framework of developing a long-range objective to ultimately return the species to select areas of its former range. By 1980 the red wolf was considered biologically Extinct in the Wild.

1 Point Defiance Zoo & Aquarium, Tacoma, WA, USA
2 US Fish and Wildlife Service, Manteo, NC, USA
* E-mail for correspondence: william.waddell@pdza.org

Concurrent with the passage of the landmark Endangered Species Act and the US Fish and Wildlife Service initiating the red wolf recovery programme in 1973, a managed breeding programme was established at Point Defiance Zoo & Aquarium in Tacoma, Washington. With US Fish and Wildlife Service funding support, a remote offsite facility was constructed near Point Defiance Zoo & Aquarium to house the canids that would be brought in from the wild and develop husbandry protocols needed to safeguard the fragile population. The breeding project was formalised through Species Survival Plan (SSP) designation by the Association of Zoos and Aquariums in 1984, with the recognition that zoos would play a key role in the recovery effort by conserving the red wolf within approved SSP institutions.

The primary objective would be to increase the population to a level wherein restoring a wild red wolf population could commence in the future. This led to the first US Fish and Wildlife Service Recovery/Species Survival Plan to combine captive breeding and management with reintroduction as a strategy for species conservation (USFWS 1990). However, the Red Wolf SSP would depart from conventional zoo-based husbandry by adopting a more "hands-off" approach to minimise to the extent possible the red wolves developing a tolerance towards people; a trait that would be fundamental to moderate red wolf–human conflict when reintroductions were initiated. As captive husbandry procedures became standardised and the population considered secure through increased reproduction, the US Fish and Wildlife Service began exploring the feasibility of initiating a reintroduction project and to consider the attributes a potential release site would need to support a successful restoration effort in the species' former range.

Return to the Wild

The US Fish and Wildlife Service identified the Alligator River National Wildlife Refuge, an area within the Albemarle Peninsula of north-eastern North Carolina, as the site to initiate this pioneering restoration project (Fig. 2). Because this would be the first attempt to re-establish a wild carnivore population from captive stock, procedures for red wolf reintroductions were lacking (Phillips *et al.* 2003). Thus, intensively monitoring released red wolves and averting public relations problems were the main focus. Consequently, public meetings were conducted one year prior to red wolves being released to inform state and local government officials and community groups about the project. A "nonessential experimental" designation was given to the newly reintroduced population of red wolves to provide greater flexibility in management and protection under the Endangered Species Act, and to gain acceptance from the public and encourage cooperation from local landowners.

Field biologists were realistic in their expectations about the challenges red wolves from the captive programme would encounter once released. Management would have to be developed and modified accordingly. Mortalities would occur, as would the need for multiple release attempts and the need to return some red wolves to the captive population due to persistent association with human activity (Phillips *et al.* 2003). In a short time, as a few of the red wolves began making the transition to the wild, a litter of wild-born pups was produced – the first breeding season following the initial releases, marking more than a decade since the last red wolf pups were born in the wild. Early successes in the restoration effort motivated the exploration of a second mainland release site.

Straddling the border of eastern Tennessee and western North Carolina, the Great Smoky Mountains National Park was selected as the site to conduct a second reintroduction attempt in the early 1990s. Once again adult red wolves from the SSP were acclimated and released, and while their transition to the wild was promising, low pup survival and the inability of red wolves to consistently establish territories within the Great Smoky Mountains National Park led the US Fish and Wildlife Service to end this restoration project in 1998. Although this effort was terminated, the project provided essential information on the interactions among red wolves, people, livestock and coyotes.

In the years following the initial releases in north-eastern North Carolina, as wild litters were born of wild-born red wolves, additional approaches to supplement the wild population have been employed. With the reliance on captive-born, adult red wolves for release diminished, island propagation sites were developed whereby animals from the Red Wolf SSP are paired and released for breeding at select undeveloped islands in the south-eastern United States. Island-born offspring

Fig. 2
Release of a red wolf in north-eastern North Carolina.
© Jeffrey Mittelstadt

are then translocated for integration into the north-eastern North Carolina population when they reach their natural dispersal age at approximately 18 months old. Portable acclimation pens for soft release are being used to promote release-site fidelity and assist in the formation of pair bonds between potential breeding red wolves (McLellan & Rabon 2006).

Because there was limited opportunity for extensive field studies prior to the widespread eradication of red wolves and the planned removal from their final range, it was recognised from the outset that baseline biological information would be opportunistically collected as the restoration programme progressed. The information gathered over the last 25 years of red wolf restoration has been vital in the sustained effort to manage and expand the world's only wild red wolf population.

Future of the Species

As the programme progressed and the wild population grew, the north-eastern North Carolina recovery area was expanded, and now encompasses more than 6,000 km² of public and private land and supports a free-ranging population that numbers near 100 red wolves. While this encouraging trend has reduced the need to utilise adult animals from the Red Wolf SSP for direct release into the north-eastern North Carolina recovery area, the innovative technique of fostering pups from the captive population to wild litters has become an effective way for the Red Wolf SSP to continue supporting interactive management between the two populations.

However, the programme's notable achievements are tempered by the modern-day reality of recurrent historical problems. Anthropogenic-related mortality accounts for more than 50% of deaths of all wild red wolves today. Gunshot mortality, specifically, whether inadvertent or deliberate, has increased in recent years, and is once again the leading cause of death for wild red wolves. And although introgression of coyote genes is being effectively controlled through an adaptive management approach, this familiar threat to the red wolf population remains a concern (Stoskopf *et al.* 2005). The species is currently classified as Critically Endangered on the IUCN Red List of Threatened Species. These issues underscore that the Red Wolf SSP population is as much a part of the recovery equation today as it was when red wolves were rescued from their final range nearly four decades ago.

Institutional dynamics between *in situ* and *ex situ* disciplines can impede needed conservation action, resulting in species recovery efforts that are often more difficult and costly to attain (Pritchard *et al.* 2012). In our experience, the US Fish and Wildlife Service and Red Wolf SSP have worked to transcend organisational differences by understanding the respective roles both population components play to advance red wolf conservation. Importantly, the US Fish and Wildlife Service and the Red Wolf SSP recognise that a balanced approach is necessary to ensure one segment of the population is not impacted at the expense of the other (e.g. Red Wolf SSP population sustainability *versus* the needs of wild populations).

A critical step in the red wolf's journey from near extinction to re-establishing the current north-eastern North Carolina wild population was initiating a zoo-based breeding programme. Without this effort, securing the red wolf's future would have been uncertain. Clearly the programme has changed since official recovery efforts began in the early 1970s, but the goal has remained constant. Now, as then, flexibility is required but always with an eye towards recovery for the red wolf and the role this unique predator plays in the ecosystems of the diverse south-eastern United States landscape.

References

- McLellan, S. R. & Rabon Jr, D. R. (2006) Translocating red wolves using a modified soft-release technique. *Canid News* 9.1: [online].
- Phillips, M. K, Henry, V. G. & Kelly, B. T. (2003) Restoration of the red wolf. In: *Wolves: Behavior, Ecology, and Conservation* (ed. by Mech, L. D. & Boitani, L.), pp. 272–288. Chicago: University of Chicago Press.
- Pritchard, D. J., Fa, J. E., Oldfield, S. & Harrop, S. R. (2012) Bring the captive closer to the wild: redefining the role of *ex situ* conservation. *Oryx* 46: 18–23.
- Stoskopf, M. K., Beck, K., Fazio, B. B., Fuller, T. K., Gese, E. M., Kelly, B. T., Knowlton, F. F., Murray, D. L., Waddell, W. & Waits, L. (2005) Implementing recovery of the red wolf – integrating research scientists and managers. *Wildlife Society Bulletin* 33: 1145–1152.
- US Fish and Wildlife Service (USFWS) (1990) *Red Wolf Recovery/ Species Survival Plan*. Atlanta: USFWS.

Tania Gilbert[1]*, Tim Woodfine[1], William Houston[2], John Newby[3] & Khaled Zahzah[4]

The Fall and Rise of the Scimitar-horned Oryx

Summary

The scimitar-horned oryx (*Oryx dammah*) has been classified as Extinct in the Wild on the IUCN Red List of Threatened Species since 2000, but concerted conservation action over the last 50 years has resulted in a large stable captive population. More recent efforts to address the causes of extirpation in the wild have led to the re-establishment of scimitar-horned oryx populations in eight protected areas in Tunisia, Senegal and Morocco. The return of scimitar-horned oryx to their natural habitat in their historical range has only been possible because of international collaborations between coordinated captive breeding programmes in Europe and North America, government departments in the range states, individual zoological institutions and implementing agencies. Whilst free-ranging populations of scimitar-horned oryx have not yet been re-established in their historical range, considerable progress on the conservation of the species has been made. There is now more hope for the scimitar-horned oryx than there has been at any point since its extirpation in the wild.

Introduction

The scimitar-horned oryx (*Oryx dammah*) is a nomadic arid-adapted antelope that was once abundant and widespread, inhabiting the vast arid-land steppes that border the Sahara (Dixon & Jones 1988). Over a million oryx existed across its historical range between the Atlantic and the Nile, forming aggregations of thousands of animals during their annual migrations. Overhunting, compounded by drought, desertification, overgrazing and competition with domestic livestock drove the oryx to extirpation in the wild in the late 20th century; the species was subsequently (2000) classified as Extinct in the Wild on the IUCN Red List of Threatened Species. The species now only exists in captive and semi-wild conditions (Gilbert & Woodfine 2004), and its future is dependent on a strategy of intrinsically linked captive breeding and reintroduction to its former range (Fig. 1).

The Captive Population

The demise of the oryx in the wild coincided with its rise in captivity, and by the end of 2011 the international studbook listed over 1,745 oryx in 222 zoological institutions around the world, with an estimated 14,800 additional animals held in private collections in the Middle East and Texas. Approximately 675 of the individuals listed in the international studbook are managed through three regionally coordinated breeding programmes covering the North American (SSP), European (EEP) and Australasian (ASMP) regions. Additionally, Japan, China and South Korea maintain separate national studbooks. The large populations in the Middle East and Texas are largely uncatalogued, and are not part of coordinated population management.

Recent molecular genetic analysis has begun to examine the genetic diversity of the global oryx population in order to determine the relationship between uncatalogued populations and those recorded in the international studbook. The result of this will inform captive breeding efforts and assist the selection of genetically diverse animals for future reintroductions. Whilst the global population of oryx is very large, only some of these animals may be available for reintroductions due to legislative, disease and transport restrictions.

1 Marwell Wildlife, Winchester, UK
2 Saint Louis Zoo, St. Louis, MO, USA
3 Sahara Conservation Fund, L'Isle, Switzerland
4 Direction Générales des Forêts, Tunis, Tunisia
* E-mail for correspondence: taniag@marwell.org.uk

Fig. 1
Reintroduced scimitar-horned oryx in Dghoumes National Park, Tunisia.
© Tim Woodfine/Marwell Wildlife

Reintroductions

The large stable captive population and the designation of effective protected areas in former range states have led to the re-establishment of oryx populations in Tunisia, Morocco and Senegal. The efforts to reintroduce oryx began over 30 years ago when the Tunisian Direction Générales des Forêts initiated discussions with the Zoological Society of London and La Fondation Internationale pour la Sauvegarde du Gibier in Paris on the feasibility of reintroducing a group of oryx from the UK to Bou Hedma National Park in central Tunisia. In 1985 this plan was put into action when ten oryx donated by Marwell Wildlife and Edinburgh Zoo were released into a Total Protection Zone at the centre of the park. The oryx adapted well to local conditions and the population steadily grew to a maximum of 130 in 2005, although it has since declined to approximately 50 individuals.

Since that first experimental release, populations of oryx have been established in Sidi Toui National Park, Dghoumes National Park and Oued Dekouk Nature Reserve in Tunisia, M'Sissi and Souss Massa National Park in Morocco, and Guembeul Reserve and Ferlo North Reserve in Senegal. The EEP provided the founders for all of these reintroduced populations, along with Israeli oryx for the Senegalese projects and SSP animals for the most recent release in 2007 in Dghoumes National Park, Tunisia. All of the reintroduction sites are relatively small and partially or completely fenced. The largest population of semi-wild oryx consists of 230 individuals and is located in the 2,400 ha Arrouais Reserve in Souss Massa National Park, Morocco.

In total, approximately 480 oryx are in semi-wild populations in their historical range. The land surrounding all of the parks and reserves is degraded, and there are currently no plans to release oryx from the fenced areas into the surrounding environment. As a result, the oryx cannot exhibit some of their natural behaviours, such as migration and dispersal, in response to changing climatic conditions. To compensate, they are managed to ensure that they have adequate food and water resources throughout the year.

All of the reintroduction projects have followed an established process whereby captive or translocated animals undergo a period of acclimatisation before being released into a fenced protected area. The most recent project in 2007 in Dghoumes National Park, Tunisia, is a good example of oryx reintroduction efforts in northern Africa.

Fig. 2
Male scimitar-horned oryx being released from his crate into an acclimatisation pen in Dghoumes National Park, Tunisia.
© Tim Woodfine/Marwell Wildlife

Case Study: Dghoumes National Park, Tunisia

Dghoumes National Park is an 8,000 ha partially fenced protected area on the edge of a large salt pan, the Chott el Jerid. The park contains three main habitat types: steppe grassland, mountains and part of the Chott itself. Nine oryx from the EEP and SSP populations were selected to create a demographically stable release group and to maximise genetic diversity in both Dghoumes National Park and the Tunisian metapopulation (Woodfine *et al.* 2009). These oryx were released into the park in December 2007 where they joined a group of seven oryx that had been transferred from Bou Hedma National Park earlier in the year, making a total founding population of 16 animals (Fig. 2).

The EEP and SSP oryx quickly adapted to the local conditions, locating water, shade and food resources, and soon joined the Bou Hedma oryx, forming one large herd. The optimal habitat conditions combined with effective protection have resulted in a high birth rate and low mortality rate, and the oryx population has grown to 68 within five years of being released. The oryx have formed flexible social groups and utilise a large part of the park, including the mountain range. Post-release monitoring and management continue, and future plans include enhanced monitoring, development of resources within an existing eco-museum in the park, training for the park rangers and wider community engagement and education.

The reintroduction of oryx to Dghoumes National Park was the culmination of five years of collaboration between the EEP, SSP, Tunisian Direction Générales des Forêts, Convention on Migratory Species and Sahara Conservation Fund. The project took place under the Direction Générales des Forêts National Strategy for the Conservation of Sahelo-Saharan Antelope in Tunisia, the National Metapopulation Management Plan for the species and the Convention on Migratory Species' Concerted Action Plan for Sahelo-Saharan mega-fauna (Beudels *et al.* 2005).

Whilst there is an undoubted economic, cultural and intrinsic value to reintroducing the oryx to its former range, such reintroductions also have an impact on local biodiversity. Historically, the land covering all four parks and reserves in Tunisia that hold oryx had been intensively overgrazed by domestic livestock. A programme of fencing and habitat restoration by the Direction Générales des Forêts in preparation for the reintroduction of Sahelo-Saharan antelopes and gazelles has seen the re-establishment of native flora and with it insect, bird, reptile, amphibian and small mammal diversity.

Global Strategy for Conservation and Reintroduction

The interest in re-establishing populations of oryx in former range states has continued to grow, and 14 countries have made a commitment through the Convention on Migratory Species' Sahelo-Saharan Concerted Action Plan to conserve Sahelo-Saharan mega-fauna, including the oryx. The increased interest, availability of animals for release and enthusiastic but uncoordinated approach to reintroduction led Marwell Wildlife to call for a global strategy for the species during the annual Sahelo-Saharan Interest Group meeting in 2008 in Al Ain, UAE. As a result, the Sahara Conservation Fund and Al Ain Zoo initiated a stakeholder-driven process designed to catalyse the restoration and conservation of the oryx across its historical range. A series of workshops has taken place in order to develop the strategy, the first of which was hosted by Al Ain Zoo and facilitated by the IUCN/SSC Conservation Breeding Specialist Group (CBSG) in November 2009. This first workshop was convened to establish the skills and resources available within the *ex situ* oryx community and to develop a suite of criteria by which alternative reintroduction sites may be assessed in the future.

A second workshop, also facilitated by CBSG, was held in Algeria in October 2010 and continued the strategic planning process (CBSG 2010). This second workshop was hosted by the Algerian Ministère de l'Aménagement du Territoire et de l'Environnement and the World Deserts Foundation. The workshop, with participants from 13 organisations and ten countries, was cosponsored by Al Ain Zoo and the Sahara Conservation Fund thanks to a donation from the Mohamed bin Zayed Species Conservation Fund.

In May 2012 a third workshop was held in Chad to test the criteria for site selection for reintroductions in relation to re-establishing a free-ranging oryx population in the Ouadi Rimé-Ouadi Achim Game Reserve, Chad. Sufficient intact habitat remains in the reserve to support a sustainable free-ranging population of oryx, but hunting, competition with domestic livestock and habitat loss from desertification and climate change are concerns. Oryx have demonstrated considerable potential for rapid population growth in the past and appear to readily adapt to novel environments. A reintroduction of oryx into the Ouadi Rimé-Ouadi Achim Game Reserve may be the best chance of re-establishing a free-ranging population of the species south of the Sahara.

Conclusion

Like so many species, the scimitar-horned oryx suffered rapid range contraction and plummeting population numbers until it became extirpated in the wild. However, unlike other species, the scimitar's story has continued through extraordinary international collaboration, careful captive propagation and reintroduction back into its historical range. Whilst past reintroduction attempts have succeeded in re-establishing small semi-wild populations, the potential now exists for large-scale releases into unfenced areas of the Sahel under the auspices of a global strategy for the species. If the proposed releases go ahead, and if they are successful, then a sustainable free-ranging population of scimitar-horned oryx will be re-established in the wild.

References

- Beudels, R. C., Devillers, P., Lafontaine, R.-M., Devillers-Terschuren, J. & Beudels, M.-O. (eds) (2005) *Sahelo-Saharan Antelopes. Status and Perspectives. Report on the Conservation Status of the Six Sahelo-Saharan Antelopes*. CMS Technical Series Publication No. 11. Bonn: UNEP/CMS Secretariat.
- Dixon, A. & Jones, D. (eds) (1988) *Conservation and Biology of Desert Antelopes*. London: Christopher Helm.
- Gilbert, T. & Woodfine, T. (eds) (2004) *The Biology, Husbandry and Conservation of Scimitar-horned Oryx (*Oryx dammah*)*. Winchester: Marwell Preservation Trust.
- IUCN/SSC Conservation Breeding Specialist Group (CBSG) (2010) *Scimitar-horned Oryx Conservation Planning Workshop II Report*. Apple Valley: CBSG.
- Woodfine, T., Zahzah, K., Chetoui, A., Gilbert, T. & d'Alterio, G. L. (2009) *Reintroduction of Scimitar-horned Oryx to Dghoumes National Park, Tunisia*. Report prepared for Direction Générale des Forêts, Tunis. Winchester: Marwell Wildlife.

Neil R. Maddison[1]*, Jiang Zhigang[2] & Maria Boyd[3]

The Père David's Deer: Clinging on by a Cloven Hoof

Summary

The story of Père David's deer (*Elaphurus davidianus*), or milu as it is known in its native China, has often been related, but is nevertheless a lasting testimony to the commitment of several key people and zoos to saving a species from extinction, including its discovery by Père Armand David at the Imperial Hunting Park at Nan Haizi, Beijing, in 1865. Once limited to only 18 individual animals left in the world, successful captive breeding and management has meant that the species has come through a genetic bottleneck. Initially concentrating on returning the milu to its native country; latterly efforts have focussed on reintroduction to its known former range of central China, where it lived in swampy marshland areas. Whilst the milu is still classified as Extinct in the Wild on the IUCN Red List of Threatened Species, there is now good argument for changing this to reflect the highly successful conservation efforts.

Fig. 1
Père David's deer at Shishou.
© Emma Alesworth

Introduction

What does it require to achieve conservation success? Effective planning? Certainly. Enough resources? Absolutely. Huge commitment? No doubt. And luck. For even the most well organised, intensive conservation action plan will probably need Lady Luck at some point to smile favourably on the efforts. The story of the Père David's deer (*Elaphurus davidianus* – or the Chinese name of milu) is one that encompasses all of these factors. It is a staggering success story; a testimony to several individuals' vision and commitment to safeguarding a species and how, without the support of zoological collections, the world could have lost one of its most spectacular animals (Fig. 1). It is an oft told story, but nevertheless one that we should take lessons from.

A Brief History of Milu

The historical range of the milu is uncertain; unearthed fossil records show that milu were widely distributed along the eastern seaboard of China and in the alluvial plains of the Yangtze River (Beck & Wemmer 1983). This uncertainty has also partially resulted from the word milu ("su-bu-xiang" meaning "four un-alikes", i.e. with the tail of a donkey, hooves of a cow, neck of a camel and antlers of a deer). Unfortunately, the term "su-bu-xiang" is given to any bizarre looking animal, be they camel, reindeer or others – as we can see in the writings of a Chinese traveller returning from western China and seeing a herd of "su-bu-xiang" at Kokonor. These were obviously camel and not milu. The species was probably extirpated from its natural habitat many centuries ago. It is certainly well adapted to living in the boggy wetlands of central China, and the current accepted thinking is that the Yangtze River valley is the most likely area where the species evolved, although there are reported fossils of the milu elsewhere, including Japan.

1 Bristol Zoo Gardens, Bristol, UK
2 Institute of Zoology, Chinese Academy of Sciences, Beijing, China
3 Bauquis & Boyd International, Beijing, China
* E-mail for correspondence: nmaddison@bristolzoo.org.uk

Hunting, urbanisation, land change and conflict issues were all almost certainly ultimately responsible for the demise of the milu, which is currently (updated in 2008) classified as Extinct in the Wild on the IUCN Red List of Threatened Species. It is not known what highest population levels ever were, but a reasonable guess would be several million animals, roaming freely through eastern China. Ancient Chinese literature cites thousands of milu swimming in the waters off the coast of Shandong Province.

By the time Father Armand David first saw the species – inside the Imperial Hunting Park (now the Beijing Biodiversity Conservation Research Centre, at Nan Haizi, south of Beijing) – there were no other known herds roaming freely in China. He recognised that this was a species that did not fit any descriptions of other deer, and postulated that this was a "new species to western science" (Fox 1949). That Père David spotted this (one anecdote has him riding a horse and peering over the wall of the hunting park), and its significance, is without doubt one of the most important events in the survival of the milu today, although several key individuals did later play their part, showing great commitment to the species.

Through the offices of the French Legation in China, Père David succeeded in shipping some hides, fragments of antlers and bones to the Museum of Natural History in Paris, where they were identified as a new species and, in the honour of Père David, given the name *Elaphurus davidianus*. Later, once again through the help of the French Legation, some live animals were shipped to Jardin d'Acclimatation in Paris, from where other individuals were subsequently distributed to Berlin and Antwerp zoos.

In 1896 there were 18 animals in Europe. Herbrand, the 11th Duke of Bedford – understanding the rarity of the breed but also the threat posed by the breeched wall surrounding the Imperial Hunting Park – decided to collect all remaining animals in Europe and bring them to his family estate, Woburn Abbey. As milu were faring poorly in European zoos at that time, the Duke instructed his animal dealer, Mr Hagenbeck, to gather them into a single group of animals (Boyd & Wang Zongyi 1989). That this herd thrived and multiplied, surviving two world wars, is a testimony to the commitment of Herbrand and his son Hastings, the 12th Duke of Bedford.

It was a good job they were as committed as they were. In 1895 the wall of the Imperial Hunting Park had collapsed and was never repaired. Over the following few years the milu inside the park left or were poached (this was also the time of the collapse of the imperial dynasties of China and there were a great many changes taking place), with the result that the last herd of milu in China was gone.

Early Conservation Efforts

Eighteen animals left in the world is not many. In fact, with such a low number, the chances of a single virus wiping out the entire herd are pretty high. It has been calculated that the world population derives from only 11 individuals. Of the animals in Woburn Abbey, there were two fawns, seven males and nine females. We know, from the diaries of Mary, Duchess of Bedford, that the two fawns never grew to breeding age; two females from Berlin Zoo were barren and consequently the global breeding stock comprised of seven males and seven females. Unfortunately, we do not have photographs of the males, so we cannot see who bred and who did not (through antler growth each year).

Nevertheless, the heavily inbred milu safely passed though the genetic bottleneck of inbreeding and adopted the vast open parkland of the mid-England estate. Normally, inbreeding would cause deleterious traits in offspring, such as stillborns, high calf death rate, fluctuating facial asymmetry, slower growth rate, etc. In heavily inbred populations, these genes are eliminated, as individuals carrying them will not live up the age of reproduction. Such a process is called genetic purging. During the early days in Woburn Abbey, most deleterious genes in milu were eliminated through genetic purging. However, some deleterious genes may still exist, as calves with a short lower jaw have been born in Beijing Milu Park, but could not survive because the animals with this trait cannot graze (Zeng *et al.* 2007).

The Woburn population continued to grow despite the two world wars. At the end of World War II, the size of the Woburn Abbey herd reached 250. To avoid "putting all the eggs in one basket", the Duke of Bedford decided to relocate some of the milu. Subsequently animals were shipped to other zoological gardens, first to other sites in the UK, then to other parts of the world.

Fig. 2
Père David's deer at Shishou.
© Neil Maddison

Back to the Present

But it was not until the 1980s that serious planning took place to return the milu to their native homeland, and ultimately the area where they had most likely evolved. Lord Robin Tavistock (who later became the 14th Duke of Bedford and great-grandson of Herbrand) was instrumental in returning the species to China – fulfilling his dream by organising 22 milu to be sent to China in 1985, from the herd at Woburn Abbey. A second herd of 18 females was sent in 1986. In 1986, after nearly a century's absence, the first fawns were born in China at Nan Haizi – the same place where they were last seen alive at the turn of the 19th century.

The newly established centre at Nan Haizi was the most obvious candidate for the first release of the milu into a park situation, being the site of the former Imperial Hunting Park. The choice of Nan Haizi was important also from another point: the close proximity to academic institution and government office that proved vital to the survival of the milu (Boyd & Wang Zongyi 1989). However, efforts to find new and larger areas did not stop there. A site at Dafeng – a salt water marsh north of Shanghai – was selected as a site for a reintroduction of milu, mainly through the efforts of WWF and Cao Keqing of the Shanghai Natural History Museum. It was thought that milu were once present in the area, as there are some sub-fossil records to support this, but in any event it was deemed eminently suitable for the species, and animals were reintroduced there from UK zoos, including both Chester and Whipsnade, in 1986; there they still thrive, with a current population of around 1,000 animals.

The desire to return milu to their known former range, however, meant that conservation efforts did not stop with the introduction of the animals at Nan Haizi and Dafeng (and Yueyang, a third reserve). Maja Boyd, one of the original team involved with the repatriation of the milu, together with Chinese scientists Wang Zongyi, Yang Rongsheng and Wang Song, carried out extensive research to identify a suitable site in the Yangtze River valley for "wild release". They concluded that an area on the north shore of the Yangtze River, with natural boundaries, in Hubei Province close to Shishou City, would be the most appropriate for reintroduction, and work proceeded. The river valley and surrounding lakes are home to magnificent reed beds, which make perfect hiding places for milu fawns and foraging adults; milu have a fairly wide-ranging diet, preferring water plants, but will feed on many species and hence the site was eminently suitable for establishing a wild population. In 1993, 30 animals were translocated from Nan Haizi to the area, with further translocations in 1995 and 2003 (Fig. 2).

Putting a large ungulate back into the wild, however, is not a straightforward thing. Although the milu is a highly protected species in China (Class 1, the highest level of protection there is), the species' ability to breed in large numbers, and to forage widely, meant that it was not long before they came into conflict with the farmers growing crops in the region. In an effort to address some of the concerns of the local people, the Hubei Environmental Protection Bureau (which has responsibility for the species within Hubei) gave permission for a deer fence to be erected around the release site.

This certainly helped alleviate some of the tensions with the local people, but it gave rise to another challenge – that of managing what was now effectively a captive population, albeit one living in an area that could sustain a large number of deer. In addition, the flooding of the Yangtze River in 1998 resulted in several cohorts of milu leaving the initial release area and forming permanent herds in other parts of the province, as well as around Dongting Lake in Hunan Province.

In 2010 the Environmental Protection Bureau appointed a partnership comprising of Maja Boyd (who had stayed closely involved with the species), Woburn Deer Park (recognised experts in milu management and historically one of the main reasons why the species has survived), the Wetlands and Wildfowl Trust (for their skills in designing an optimising habitat conditions for the milu) and Bristol Zoo Gardens (for their expertise in working with local communities living around protected areas in situations of human–wildlife conflict) to develop a 15-year master plan for the area – now entitled the Hubei Shishou Milu National Nature Reserve (Hubei Environmental Protection Bureau 2011). The plan was presented in November 2011 to a panel of Chinese experts, headed by academician Jin Jianming who ratified the strategy and implementation plan. There are currently around 450 milu living inside the Reserve, with an estimated 350 more living freely in Hubei and Hunan. The species has most certainly been re-established in its former range.

Future Plans

What now for the milu in China? Although still classified as Extinct in the Wild, this is clearly incorrect, as the authors have seen and photographed individual animals outside of any contained herd. Students of the Central South University of Forestry and Technology at Changsha have also followed three wild-living populations in Hubei and Hunan. As well as these wild herds, there are now many zoos in China that hold at least a few individuals. What is clearly needed now is an agreed Conservation Action and Management Plan (CAMP), so that the species can be managed on a country-wide scale, benefiting from the lessons learned over the last 120 years. Zhang Linyuan, director of the Beijing Biodiversity Research Centre at Nan Haizi, believes that the species would benefit from a coming together of recognised experts in milu conservation, from within China as well as internationally, and as such is looking at the potential of hosting a CAMP workshop sometime in 2013, so that such a national plan can be agreed and implemented.

It is an exciting prospect and will give the opportunity for individuals and organisations to celebrate one of the few major success stories in wildlife conservation, whilst recognising that there is still work to be done, especially as wild populations increase and come into conflict with human activities. With so many species under the threat of imminent extinction, the milu workshop will indeed be a rare event – management planning of an animal that was so very nearly lost to the world and is now on the increase. The role of zoos and private collections in safeguarding this species from extinction is something that all zoo professionals should be proud of.

References

- Beck, B. B. & Wemmer, C. M. (1983) *The Biology and Management of an Extinct Species: Père David's Deer*. Park Ridge: Noyes Publications.
- Boyd, M. M. & Zongyi, Wang (1989) The reintroduction of Père David's deer (*Elaphurus davdianus*) to Nan Haizi Milu Reserve, Beijing, China. Proceedings of the Fifth International Theriological Congress, Rome.
- Fox, H. M. (1949) *Abbé David's Diary*. Cambridge: Harvard University Press.
- Hubei Environmental Protection Bureau (2011) *Hubei Shishou Milu National Nature Reserve: Master Plan for Development 2011–2026*. Wuhan: Hubei Environmental Protection Bureau.
- Zeng, Y., Jiang, Z. & Li, C. (2007) Genetic variability in relocated Père David's deer (*Elaphurus davidianus*) populations – Implications to reintroduction program. *Conservation Genetics* 8: 1051–1059.

Val Hornyak[1]*

The Wyoming Toad: Partnerships for Recovery

Summary

The Wyoming toad (*Anaxyrus (Bufo) baxteri*) is one of the most endangered amphibians in North America and probably in the world; the species has been classified as Extinct in the Wild on the IUCN Red List of Threatened Species since 2004. It was thought to be extinct by the mid-1980s, until a single population was discovered in 1987 and recovery efforts began, making this one of the most long-term conservation programmes for any North American amphibian species. The captive management of this species has proven to be challenging, creating an impediment to the production of large numbers for release. Since 1995, 14 zoos and two US Fish and Wildlife Service facilities in Wyoming have successfully reproduced Wyoming toads for reintroduction, with a total of 147,598 tadpoles, toadlets and toads released as of 2011. The Wyoming toad is currently known to exist in the wild at only two sites, Mortenson Lake National Wildlife Refuge and one federally designated Safe Harbour site within its historical range. Both populations exist only as a result of reintroductions from captive breeding efforts.

Fig. 1 Male Wyoming toad burrowing in a bank at Mortenson Lake. © Wyoming Toad SSP

History of the Wild Toad

The Wyoming toad was once abundant in the Laramie Basin, in Albany County, within a limited range of 2,330 km². Discovered in 1946 by George Baxter, initially it was considered a relict of the Canadian toad (*Bufo hemiophrys*). Eventually, it was described as a subspecies of the Canadian toad (*B. h. baxteri*) and later was elevated to full species status. More recently the Wyoming toad was assigned to the genus *Anaxyrus* (Frost *et al.* 2006).

Population declines were detected in the 1970s, and by the early 1980s the toad had essentially disappeared from its riparian haunts along the Big and Little Laramie rivers and associated wetlands. By the time it was listed as a federally Endangered Species in 1984, it was already feared to be extinct. Reasons for the toad's decline remain uncertain, but probably include the synergistic effects of aerial pesticides, habitat alteration, predation, disease and the continuing loss of genetic diversity as their numbers decreased.

In 1987 a small population of Wyoming toads was discovered at Mortenson Lake (Fig. 1), a local fishing club 23 km southwest of Laramie. This property was acquired by the US Fish and Wildlife Service to become what is now the Mortenson Lake National Wildlife Refuge, a closed refuge established for the protection of the Wyoming toad. At the time of its discovery, the toad population at this site seemed to be thriving, with numbers estimated at 100 to 150 individuals from 1987 through 1989 (Withers 1992; Corn 1993; Parker 2000). Unfortunately, this was not to last. Reproduction at the site steadily decreased until in 1994 what was believed to be the last remaining wild-hatched Wyoming toad was brought into captivity from Mortenson Lake. By 1995 the species once again appeared to be extirpated in the wild (Odum & Corn 2005) and was subsequently (2004) classified as Extinct in the Wild on the IUCN Red List of Threatened Species.

1 Toledo Zoo, Toledo, OH, USA
* E-mail for correspondence: val.hornyak@toledozoo.org

History of the Captive Breeding Programme

It was clear by the late 1980s that intervention was required to prevent the extinction of this species, and thus a captive breeding programme was initiated by the Wyoming Game and Fish Department. The first toads, four young-of-the-year and six yearlings, were collected from Mortenson Lake on 1 September 1989 and housed at the Sybille Wildlife Research Center, near Wheatland, Wyoming. For the next few years various strategies were pursued, including breeding wild toads in protected outdoor enclosures, but none of these efforts were ultimately successful.

A breakthrough for the programme occurred in 1994, when the first captive breeding was accomplished at Sybille. Also in 1994 zoos of the Association of Zoos and Aquariums (AZA) were formally invited to participate in the captive breeding programme. Several zoos responded, received toads and began efforts to reproduce them. The Wyoming toad was designated as a Species Survival Plan (SSP) programme by AZA in 1996. Additional AZA facilities then came on board, assisting the recovery effort with valuable resources of holding space and staff with amphibian husbandry experience. In 1997 the Saratoga National Fish Hatchery located in Saratoga, Wyoming, joined the programme, completing the partnership of AZA and the US Fish and Wildlife Service facilities that exists today. The total captive population hovers between 400 and 500 toads, currently held at ten facilities.

From 1995 through 2003 the captive breeding facilities produced 46,246 tadpoles and toadlets, which were released at Mortenson Lake National Wildlife Refuge, Lake George (part of Hutton Lake National Wildlife Refuge), one research site and two Safe Harbour sites (Fig. 2). While no new populations were successfully established at the other sites during that time, the breeding population at Mortenson Lake was restored. In the spring of 1998, four egg masses were discovered at Mortenson Lake – the first observed wild reproduction since 1991. Through the efforts of the captive breeding facilities and other recovery partners, the Wyoming toad had been pulled back from the very brink of extinction.

Status of Wild Populations

High on the list of threats to the survival of the Wyoming toad is *Batrachochytrium dendrobatidis*, the infamous amphibian chytrid fungus. Its presence at Mortenson Lake was detected in 2000, with levels of infection documented to be increasing over time. In 2003 a decision was made to discontinue reintroductions at Mortenson Lake. Monitoring was continued to see what could be learned about the species' ability to coexist with chytrid. Surprisingly, the toads persevered. Of 125 samples taken for PCR testing during the course of the 2009 summer surveys at Mortenson Lake, 93 were positive for chytrid (Pessier, personal communication). Encouraging recapture data have revealed that infected individuals can survive hibernation (Palmer, personal communication).

As of 2010 the Mortenson Lake toad population once again appeared to be declining, but the decline might not have been brought about by disease alone. Habitat degradation or a combination of factors may be playing a larger role. Plans to address these issues and to resume reintroductions at Mortenson Lake are now under discussion.

As an incentive to private landowners, the US Fish and Wildlife Service initiated a Safe Harbour programme for this species in 2005. This agreement protects land owners' rights in exchange for the use of their property as a reintroduction site for an endangered species. Currently, there is just one Safe Harbour site, which since 2005 has received the majority of the captive-bred releases. Chytrid is also present at this site, but the toads are persevering. As a result of the concentrated release efforts, this population now appears to have become established, with possible reproduction in 2012. This brings the number of known wild toad populations to two and is a significant achievement for the captive breeding facilities and the Wyoming Toad Recovery Team.

Fig. 2 Release of captive-bred Wyoming toad tadpoles. © Wyoming Toad SSP

Managing the Captive Population

Since the inception of the Wyoming Toad SSP programme, the captive population has been managed with two primary goals: (1) to produce as many offspring as possible to support reintroduction efforts in Wyoming, and (2) to maintain as much genetic diversity as possible within the captive assurance population.

To meet these goals, priority is given to demographic management for the production of offspring. Each year pairings are selected based upon mean kinship, calculated using studbook data of all the animals in captivity. However, as few as one third of the designated pairings have resulted in the production of viable

offspring. To support the reintroduction effort, additional ("gratuitous") pairings are made, based on the overall health and age of the animals, but still with considerations to minimise the relatedness of the parents. Although founded with a minimum amount of gene diversity, the captive population still persists without any obvious genetic load from inbreeding. Having a very fecund species might be the reason why this has not been a significant issue.

The biology of a very fecund anuran with a short lifespan has both significant benefits and correspondingly creates numerous management problems in captivity. The current software available for population management does not easily permit the entry of great numbers of offspring (clutches of the Wyoming toad can exceed 2,000). Hundreds of animals are hatched and retained in captivity, thousands of animals released and hundreds of deaths occur every year. Both hardware and software are challenged, and a great deal of time is dedicated to collecting and entering pedigree data into the studbook. With this highly dynamic captive propagation for reintroduction programme, identification of breeding pairs, transfers and appropriate animals for release is an ongoing task that requires almost real-time data for its administration.

Captive Breeding for Reintroduction

Breeding for release requires the production of tadpoles to correspond with their appearance in the wild when food supply and weather are optimal for survival. Therefore, windows for producing and shipping tadpoles are narrow and require adherence to hibernation and breeding schedules and protocols. Biosecurity at its highest level (permanent isolation from all other amphibians in both quarantine and holding areas) is also required by this SSP programme. As all individual toads are genetically important and considered potential breeders, all must be maintained in biosecurity. For this reason, no exhibit or research populations exist at this time. All facilities participating in the SSP must meet the criteria for captive breeding and hold a US Fish and Wildlife Service Endangered Species permit.

Husbandry has proven to be challenging, because of the limited amount of available natural history information upon which to base diets, supplements, housing or hibernation. Institutions are asked to keep written records of husbandry practices, and to follow protocols that are slowly being developed based on the most consistently successful practices. Communication is essential in this fast-moving programme. Toad keepers are expected to participate in prescheduled conference calls and to attend the annual SSP meetings held in Wyoming. There, they are also able to assist the US Fish and Wildlife Service and other partners in the monitoring of wild toad populations. This field experience is invaluable for toad keepers trying to understand the needs of the species in captivity.

Conclusion: Hope for the Toad

Dedication and resourcefulness of toad keepers, support from participating institutions and commitment of the US Fish and Wildlife Service and other recovery partners have been remarkable. Teamwork and persistence have been the programme's greatest assets. Without this cooperative effort, the Wyoming toad would almost certainly not be with us today. Its status is still precarious, but there is reason for optimism as progress continues to be made. Although still classified as Extinct in the Wild, the game is not over for *Anaxyrus (Bufo) baxteri*. Go toads!

Acknowledgements

I thank Andrew Odum, Jan McKee, David Paddock and Louis Porras for their valuable assistance with this article.

References

- Corn, P. S. (2003) Endangered toads in the Rockies. In: *Ecological and Earth Sciences in Mountain Areas* (ed. by Taylor, L., Martin, K., Hik, D. & Ryall, A.), pp. 43–51. Banff: The Banff Centre.
- Frost, D. R., Grant, T., Faivovich, J., Bain, R. H., Haas, A. *et al.* (2006) The amphibian tree of life. *Bulletin of the American Museum of Natural History* 297: 1–370.
- Odum, R. A. & Corn, P. S. (2005) *Bufo baxteri* Porter, 1968: Wyoming toad. In: *Amphibian Declines: The Conservation Status of United States Species* (ed. by Lannoo, M.), pp. 390–392. Berkeley: University of California Press.
- Parker, J. M. (2000) Habitat use and movements of the Wyoming toad, *Bufo baxteri*: a study of wild juvenile, adult, and released captive-raised toads. MSc thesis, University of Wyoming, Laramie, WY.
- Withers, D. I. (1992) The Wyoming toad (*Bufo hemiophrys baxteri*): an analysis of habitat use and life history. MSc thesis, University of Wyoming, Laramie, WY.

Menachem Goren[1]*

The Fall and Rise of the Yarqon Bleak

Summary

The Yarqon bleak (*Acanthobrama telavivensis*) is a cyprinid fish endemic to the coastal river system in Israel. By 1999 only three small isolated populations survived following severe drought. In order to save the species from extinction, a breeding facility was established in the ichthyological laboratory at Tel Aviv University and approximately 150 fish were captured prior to the complete drying of the rivers. Following successful breeding, an initial reintroduction of the fish in 2002/2003 failed. Surveys in 2004 revealed its failure to reproduce in nature. The species has been classified as Extinct in the Wild on the IUCN Red List of Threatened Species since 2006. Additional research provided knowledge enabling proper engineering of natural and semi-natural sites. In 2006/2007 approximately 9,000 laboratory-born fish were reintroduced into 12 sites, most of them engineered. Surveys from 2007 onwards revealed fish of all sizes and ages, including juveniles, at most release sites. The Yarqon bleak has been successfully returned to nature.

Fig. 1
Yarqon bleak from the Yarqon River.
© Menachem Goren

Demise

The Yarqon bleak (*Acanthobrama telavivensis*; Goren *et al.* 1973), endemic to the coastal river system in Israel, is the most notable representative of the family Cyprinidae in this system (Fig. 1). It lives in Mediterranean-type rivers. Until the 1950s it was distributed throughout the coastal river network, except for the Qishon River (Goren & Ortal 1999). During the second half of the 20th century all coastal rivers in Israel were severely polluted and much of their water was used for irrigation and domestic consumption. The consequence was the extinction of the Yarqon bleak from most of its distribution range. Following the species' demise (see below), the Yarqon bleak was considered Critically Endangered in the Israeli Red Book (Goren 2004) and was subsequently (2006) classified as Extinct in the Wild on the IUCN Red List of Threatened Species.

In July 1999 we realised that the last existing habitats of the fish were going to become dry as a result of a severe drought during the previous winter that followed several years of low precipitation. Only three small isolated populations survived and the species was on the brink of extinction. At this point I approached the authorities and suggested hosting several thousand fish in my laboratory for a year or two, until conditions in nature would improve and then returning them to the wild. Since the catastrophe was expected to continue (this area experiences frequent droughts), we had to reach a quick decision and no feasibility study was made. Fortunately, cooperation between the Yarqon River Authority, the Nature and Park Authority, the Ministry for Environmental Protection and my own laboratory was achieved. Within three months we managed to raise the needed funds and to build a facility for maintaining the fish in the ichthyological laboratory at Tel Aviv University.

Breeding

Unfortunately, by the time the facility was built, not much was left of the habitats: the rivers were continuing to dry out and most of the fish were already dead. We managed to collect only approximately 100 fish from the Yarqon River and approximately 50 fish from the Tut River several days before both rivers dried out. The fish, in a very bad state of health, were brought to the ichthyological laboratory and carefully treated and housed in the facility (Fig. 2). Since only 120 survived, while for reintroduction of the fish thousands were likely to be needed, we altered our strategy and set out to breed them. The fish of both populations were kept as separate breeding stocks.

1 Department of Zoology, Tel Aviv University, Tel Aviv, Israel
* E-mail for correspondence: gorenm@post.tau.ac.il

Fig. 2
Breeding facility for Yarqon bleak at Tel Aviv University.
© Menachem Goren

Maintenance of the breeding centre was complicated and included feeding the fish with a combination of manufactured and natural food, daily monitoring of the spawning substrate, transferring the spawn and their substrate to special tanks, and providing each stage of the larvae and post-larvae with different conditions and diet. The lack of sufficient financial support was a major difficulty, as the budget acquired was far less than the minimum required for the project. Much of the maintenance and research was performed by volunteers.

Within a period of five years, we managed to produce more than 14,000 fish (of both populations), soon exceeding the capacity of the facility. The almost complete lack of relevant scientific knowledge regarding the biology of the species was a major difficulty. Because the Yarqon bleak is a wild fish and at that time we had very little knowledge of its biology, we faced dilemmas regarding its diet, preferred spawning substrate, temperatures, velocity of the water, photoperiod, etc. Therefore, from the first day of arrival of the fish in the laboratory, continuous research of various biological and ecological aspects was carried out and the subsequent implementation of the findings proved to be crucial for the success of the reintroduction. We developed a protocol for daily procedures in handling the fish, spawns and water quality, and developed a special menu for each stage of the larvae and post-larval development.

Reintroduction

Parallel to our work, the Nature and Parks Authority reached an agreement with the government to ensure a permanent, minimum discharge of high quality water into the upper part of the Yarqon River in order to prevent future drying of the river, even during a drought. This enabled us in 2002/2003 to return approximately 5,000 adult fish to the Yarqon River. This was accompanied by a public relations campaign and educational activities. Surveys carried out in 2004 revealed that the reintroduced fish survived in nature and were in good body condition, but did not reproduce.

Considering the knowledge acquired in the laboratory, we assumed that the reason for the failure was a shortage of suitable spawning substrate and insufficient shelter sites for the juveniles. To test this hypothesis, in 2004 we constructed a pond fed with water from the Yarqon River, approximately 400 m² in size and 1 m deep, of which the bottom was covered with gravel and piles of stones. In addition, various plants were planted in and around the pond (*Nymphaea coerulea*, *Potamogeton nodosus*, *Cyperus longus*, *Cyperus corymbosus*, *Lythrum salicaria*, *Lythrum junceum*, *Lycopus europaeus*, *Juncus fontanesii*, *Polygonum salicifolium*, *Trifolium* sp., *Cynodon dactylon* and *Phyla nodiflora*). Within a few months after stocking the pond with Yarqon bleak, thousands of juveniles were observed.

Following the success of the experimental pond and the government's assurance regarding water, 12 sites along the Israeli coastal river system were assigned for reintroduction of the Yarqon bleak, most of them engineered to contain the species' essential habitat. In 2006/2007 approximately 9,000 laboratory-born fish were returned to nature. Offspring of fish originally captured in the Yarqon River were stocked in southern Israel, in or close to the Yarqon River basin, while offspring of fish originally captured in the Tut River were stocked in various rivers in the central and northern coastal system, in basins where this species had existed in the 1950s. In surveys carried out from 2007 onwards, fish of all sizes and ages, including juveniles, were found at most release sites. The various stages of the project are described in detail in Goren (2009).

Outcome

Our multiple-year effort to prevent the extinction of the Yarqon bleak clearly demonstrates that an imperilled fish species can be saved. The combination of experience and scientific research enabled us to keep the "refugee fish" alive, although initially they were sick and in very bad condition; to produce a large number of fish in the laboratory; to identify the reasons for the failure of the first reintroduced fish to breed; and to suggest effective solutions to these problems. The project can be regarded as highly successful (Goren 2010). The fish reproduced in nature over consecutive years and the population has increased significantly in size since the reintroduction. A permanent supply of good quality water to the rivers was promised by the government as part of a new approach called "The right of nature to water". With breeding of released individuals and persistence over three generations as success indicators (Goren 2010), the Yarqon bleak, although still classified as Extinct in the Wild, has been successfully returned to nature.

We learned two major lessons during this project: (1) There are no shortcuts in saving endangered species. These kinds of projects are long-term and consume a lot of time, money, goodwill and broad consensus of the neighbouring community. A devoted leader for such a project is the key to success. (2) The efforts to save an endangered species should be directed simultaneously to several channels:

- Establishment of an efficient breeding facility for the fish and developing a professional maintenance protocol.
- Research conducted by professional scientists on the relevant aspects of fish biology (diet, spawning habits, water quality and velocity, shelters, preferred temperatures for various stages of reproduction, preferred habitats, etc.).
- Rehabilitation (water supply and quality) and engineering (spawning sites for adults and shelter for juveniles) of the habitat that is planned to accommodate the fish.
- Experimental stocking of the fish in the rehabilitated habitat, followed by releasing the fish in sites that have been found to be suitable in the experimental stage.
- Continued monitoring of the habitat and of the reintroduced fish population.
- Public relations to raise awareness, achieve the funds needed for the project, secure a long-term supply of water in arid countries, and gain the support and goodwill of the public and decision-makers.

Acknowledgements

I am grateful to the students in my laboratory, especially E. Elron, B. Libes, Y. Krotman and Y. Gueta, for the endless time they spent on and their devotion to the project of saving the Yarqon bleak.

References

- Goren, M. (2004) Freshwater fishes in Israel. In: *The Red Book: Vertebrates in Israel* (ed. by Dolev, A. & Perevolotsky, A.), pp. 39–54. Jerusalem: Keter Printing.
- Goren, M. (2009) Saving critically endangered fish species – utopia or practical idea? The story of the Yarqon bleak – *Acanthobrama telavivensis* (Cyprinidae) as a test case. *Aqua, International Journal of Ichthyology* 15: 1–12.
- Goren, M. (2010) Re-introduction of the "Extinct in the Wild" Yarqon bleak, Israel. In: *Global Re-introduction Perspectives: 2010* (ed. by Soorae, P. S.), pp. 45–48. Abu Dhabi: IUCN/SSC Re-introduction Specialist Group.
- Goren, M. & Ortal, R. (1999) Biogeography, diversity and conservation of the inland water fish communities in Israel. *Biological Conservation* 89: 1–9.
- Goren, M., Fishelson, L. & Trewavas, E. (1973) The cyprinid fishes of *Acanthobrama* Heckel and related genera. *Bulletin of the British Museum of Natural History (Zoology)* 24: 291–315.

Brian K. Lang[1]*, Stephen M. Shuster[2] & Rebecca Houtman[3]

Controlled Propagation of the Socorro Isopod

Summary

The Socorro isopod (*Thermosphaeroma thermophilum*), classified as Extinct in the Wild on the IUCN Red List of Threatened Species since 1996, is an endemic crustacean restricted to a single thermal spring. This species was used to implement a novel conservation strategy when extirpation in the wild (1988) prompted regulatory authorities to construct the Socorro Isopod Propagation Facility in Socorro, New Mexico, USA. Reintroduction of individuals from captive populations at the University of New Mexico and Albuquerque BioPark to the native spring and the Socorro Isopod Propagation Facility has successfully prevented extinction of the species to date. However, significant differences in population structure have arisen between the native spring and captive populations, and selection on body size, possibly due to cannibalism, appears to have generated unexpected genetic and morphological diversity within this endangered population.

Fig. 1 Socorro isopod. © Joel Sartore

Introduction

Captive rearing often focuses on genetic aspects of long-lived, globally rare vertebrate taxa. Many of these charismatic vertebrates are poorly suited for manipulative experiments designed to evaluate even the most parsimonious management regimes (i.e. limited gene pools often prevent experimental replication). Invertebrate species, however, lend themselves to experimental designs due to rapid turnover rates and smaller body sizes. Accordingly, these factors facilitate assessment of propagation effects on genetics, demography, habitat and behaviour of invertebrates under controlled environments. We present here a brief 22-year summary of recovery efforts to conserve the Socorro isopod (*Thermosphaeroma thermophilum*) (Crustacea: Flabellifera).

1 Conservation Services Division, New Mexico Department of Game and Fish, Santa Fe, NM, USA
2 Department of Biological Sciences, Northern Arizona University, Flagstaff, AZ, USA
3 City of Albuquerque, Albuquerque BioPark, Albuquerque, NM, USA
* E-mail for correspondence: blang@state.nm.us

Based on a globally restricted range and threats to its habitat, the Socorro isopod (Fig. 1) was listed as Endangered in 1982 by the State of New Mexico and the US Fish and Wildlife Service (USFWS 1982). Ironically, the Socorro isopod appears to have been extirpated in the wild (1988) when discharge of the native spring resulted in desiccation of flow (Lang *et al.* 2006). The species was subsequently classified as Extinct in the Wild on the 1996 IUCN Red List of Threatened Species. Flow in the native spring was quickly re-established and the native population was augmented from a captive population (500 individuals) housed at the University of New Mexico. This near-extinction event prompted continuance of *ex situ* propagation at the University of New Mexico and Albuquerque BioPark, including construction of the Socorro Isopod Propagation Facility in 1990.

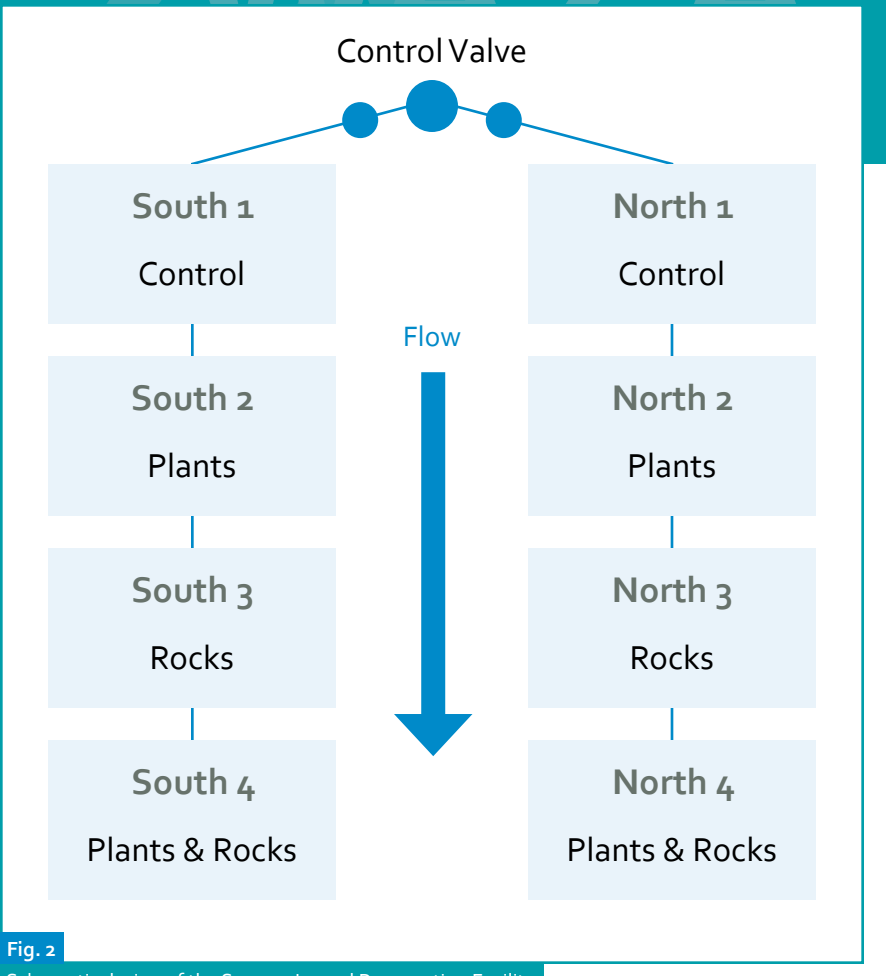

Fig. 2
Schematic design of the Socorro Isopod Propagation Facility.

This species is cannibalistic with larger individuals preying more intensely on younger age classes. Vertical habitat structure plays a significant role in native and captive-held populations by providing protective cover for younger age classes to avoid larger-sized cannibals (Jormalainen & Shuster 1997; Shuster *et al.* 2005; Lang *et al.* 2006). We briefly summarise here empirical results of a 100-month monitoring period that compared the effects of captive propagation on an endangered invertebrate relative to monitoring of the native population during the same period of record (Shuster *et al.* 2005; Lang *et al.* 2006).

Methods

The Socorro Isopod Propagation Facility (Fig. 2) consists of two series (north and south) of four rectangular pools (0.53 × 1.63 × 0.75 m). These pools were designed to approximate dimensions of the native habitat and are supplied with groundwater from the natural spring at a rate of 0.02 m³/min. Each series of pools is connected by polyvinyl chloride pipes to create a through-flowing system that drains to a leach field. To assess the effects of habitat structure on Socorro isopod propagation, we replicated four habitat treatments in each of the north and south series pools: pool 1 (no structure, experimental control), pool 2 (plants only), pool 3 (rocks only) and pool 4 (rocks and plants). Pool 4 treatment most closely emulated native habitat conditions (Shuster *et al.* 2005; Lang *et al.* 2006).

Over time 1,000 Socorro isopods have been introduced in equivalent numbers to each pool. Efficacy of introductions relative to controlled environments was assessed by two separate, 50-monthly census periods using benthic and sweep samples in the Socorro Isopod Propagation Facility and compared to concurrent sampling from the native population. A genetic study was performed to compare among- and within-population effects. Body sizes of native and captive populations were also compared (Shuster *et al.* 2005; Lang *et al.* 2006).

Results

Genetics (Shuster *et al.* 2005). Variation in 57 genetic markers showed that in six years (1990–1996), captive subpopulations diverged significantly from the natural population, and diverged in body length nearly twofold from the natural population, evidently because of cannibalism and possibly sexual selection favouring large size. We found minimal detectable genetic divergence within captive subpopulations.

Body size (Shuster *et al.* 2005). Cannibalistic-based selection appeared to favour significantly increased body size in both sexes among native (smaller-bodied) *versus* captive (larger-bodied) populations. As expected, if cannibalism was the source of selection for large body size, within 15 months (i.e. seven to eight generations) the rate at which body size increased became inversely proportional to the amount of physical structure introduced to pools.

Demography (Lang *et al.* 2006). Abundance of isopods in the native habitat remained significantly higher than densities observed in captive populations. Habitat treatments of the Socorro Isopod Propagation Facility that most closely emulated native habitat supported significantly higher densities of isopods.

Behaviour (Lang *et al.* 2006; Bleakley *et al.* in review). In captivity, Socorro isopods formed "brooding huddles" where cannibalistic individuals did not normally congregate in the wild population. Relative body size and sex influenced the probability of and latency to initiate a cannibalistic attack, with larger males tending to attack more than smaller females. These results corroborate other research showing males to be more cannibalistic than females, suggesting that sexual selection and selection on body size could be more intense in captive populations.

Conclusions

Our studies (Shuster *et al.* 2005; Lang *et al.* 2006) show that physical separation of captive subpopulations from the natural population, combined with selection on the captive subpopulations due to age- and sex-specific cannibalism, resulted in significant genetic divergence between natural and captive subpopulations, including significant divergence in body size of captive subpopulations from the natural population and among the captive subpopulations themselves.

Moreover, we note that controlled propagation may affect the dynamics of social interactions as well as the species' mating system. These influences may induce a behavioural response to selection on body size to avoid cannibalism, or adjustments to spatially altered sex ratios in artificial environments. Additionally, complexity of vertical habitat structure, especially plants, was evidently necessary to maintain age structure heterogeneity among captive isopods, thereby maximising long-term population viability.

Small, isolated populations of invertebrates that have remained viable for long durations after separation from formerly wide-ranging parent species, such as this one, can provide information useful for identification of genetic changes produced by bottlenecks, as well as lend insight for the management of endemic species that are globally rare. Controlled propagation of the Socorro isopod has proven to be an effective conservation management practice that not only has increased total population size, but also has ameliorated threats to the native population by establishing accessory populations at the Socorro Isopod Propagation Facility and Albuquerque BioPark. Perhaps most importantly, such recovery-oriented research actually prevented global extinction of this species.

While current research trends urge resource managers to adopt ecosystem-based management strategies, our results emphasise the need to continue research focused on species-specific management practices, which is particularly germane to conserve geographically restricted populations of non-charismatic invertebrates such as the Socorro isopod.

Acknowledgements

We acknowledge and thank the many individuals who assisted with field monitoring during our studies. Funding for this research was provided by the US Fish and Wildlife Service and the New Mexico Department of Game and Fish.

References

- Bleakley, B. H., Welter, S. M., McCauley-Cole, K., Shuster, S. M. & Moore, A. J. (In review) Pre-cannibalistic aggression is influenced by social partners in the endangered Socorro isopod (*Thermosphaeroma thermophilum*). *Behavioral Ecology*.
- Jormalainen, V. & Shuster, S. M. (1997) Microhabitat segregation and cannibalism in an endangered freshwater isopod, *Thermosphaeroma thermophilum*. *Oecologia* 111: 271–279.
- Lang, B. K., Kelt, D. A. & Shuster, S. M. (2006) The role of controlled propagation on an endangered species: demographic effects of habitat heterogeneity among captive and native populations of the Socorro isopod (Crustacea: Flabellifera). *Biodiversity and Conservation* 15: 3909–3935.
- Shuster, S. M., Miller, M. P., Lang, B. K., Zorich, N., Huynh, L. & Keim, P. (2005) The effects of controlled propagation on an endangered species: genetic differentiation and divergence in body size among native and captive populations of the Socorro isopod (Crustacea: Flabellifera). *Conservation Genetics* 6: 355–368.
- US Fish and Wildlife Service (USFWS) (1982). *Socorro Isopod (*Thermosphaeroma thermophilum*) Recovery Plan*. Albuquerque: USFWS.

World Association of
Zoos and Aquariums
WAZA | *United for Conservation*®

www.waza.org

ISSN: 2074-4528