Biological Assessment

Mill Creek Fish Passage Restoration Project
Ward Dam

Tehama County, California

February 2015

Prepared for:

nhc
northwest hydraulic consultants

3950 Industrial Boulevard, Suite 100C
West Sacramento, CA 95691

Prepared by:

TEHAMA
ENVIRONMENTAL SOLUTIONS, INC.

910 Main Street, Suite D, Red Bluff, CA 96080
(530) 528-8272

Biological Assessment

Mill Creek Fish Passage Restoration Project
Ward Dam

Tehama County, California

February 2015

Prepared for:

northwest hydraulic consultants

3950 Industrial Boulevard, Suite 100C
West Sacramento, CA 95691

Prepared by:

TEHAMA
ENVIRONMENTAL SOLUTIONS, INC.

910 Main Street, Suite D, Red Bluff, CA 96080
(530) 528-8272

TABLE OF CONTENTS

PAGE

I. INTRODUCTION 1
- Prepared By 1
- Contact Information 1
- Considered Species 2
- Quads Searched for Listed and Proposed Species 2
- Species Eliminated from Further Consideration 3
- Critical Habitat 4
- Essential Fish Habitat 5

II. CONSULTATION TO DATE 5

III. PROPOSED ACTION 6
- Project Location 6
- Background 6
- Project Purpose 10
- Project Description 11
- Resource Protection Measures 15
- Action Area 19

IV. AFFECTED SPECIES AND EXISTING ENVIRONMENT 19
- Central Valley Steelhead *(Oncorhynchus mykiss)* 19
- Central Valley Spring-Run Chinook Salmon *(Oncorhynchus tshawytscha)* 22
- Western Yellow-billed Cuckoo *(Coccyzus americanus occidentalis)* 24

V. EFFECTS AND ANALYSIS 25
- Central Valley Steelhead 25
- Central Valley Spring-Run Chinook Salmon 27
- Western Yellow-billed Cuckoo 27
- Pacific Salmon EFH 28
- Interdependent and Interrelated Effects 28
- Cumulative Effects 28
- Beneficial Effects 29

VI. ESA EFFECTS DETERMINATION 29

VII. REFERENCES 30

VIII. PERSONS CONSULTED 33

IX. ACKNOWLEDGEMENTS 33

FIGURES

PAGE

1. Site Vicinity Map 7
2. Site Location Map 8
3. Site Aerial Photo 9
4. Action Area Map 20

APPENDICES

A. USFWS Species List
B. 95% Design Plan Drawings
C. 95% Basis of Design
D. Wetland Delineation Map
E. Site Photos

I. INTRODUCTION

The purpose of this Biological Assessment (BA) is to review the Mill Creek Fish Passage Restoration Project – Ward Dam (project) in sufficient detail to determine if the proposed action may affect fish and wildlife species listed under the Endangered Species Act as Endangered, Threatened, Proposed Endangered or Proposed Threatened; designated Critical Habitat (CH) for those species; and Essential Fish Habitat (EFH), under the jurisdiction of the U.S. Fish and Wildlife Service (USFWS) or the National Marine Fisheries Service (NMFS). This document was prepared in accordance with the requirement set forth under Section 7 of the Endangered Species Act of 1973, as amended (ESA) [16 U.S.C. 1536 (c)] and the Magnuson-Stevens Fishery Conservation and Management Act, as amended (MSA) [U.S.C 180 et seq.].

Prepared By:

Mr. Jeff Souza
Senior Biologist
Tehama Environmental Solutions, Inc.
910 Main Street, Suite D
Red Bluff, California 96080
(530) 528-8272
jeff@tehamaenvironmental.com

Ms. Kelly Peterson
Associate Environmental Specialist
Tehama Environmental Solutions, Inc.
910 Main Street, Suite D
Red Bluff, California 96080
(530) 528-8272
kelly@tehamaenvironmental.com

Contact Information

The project applicant is the USFWS. The USFWS is the lead agency under the National Environmental Policy Act (NEPA). Contact information for the lead agency is listed below:

U.S. Fish and Wildlife Service
Ms. Patricia Parker Hamelberg
Fish Biologist / Habitat Restoration Coordinator
USFWS, Red Bluff Fish and Wildlife Office
10950 Tyler Road
Red Bluff, California 96080
(530) 527-3043, ext. 248
Tricia_Parker@fws.gov

Considered Species

The following species, CH and EFH are considered in this document:

Endangered, Threatened or Proposed Species

Green Sturgeon (and its CH)	*(Acipenser medirostris)*	**Threatened**
Conservancy Fairy Shrimp (and its CH)	(*Branchinecta conservatio)*	**Endangered**
Vernal Pool Fairy Shrimp (and its CH)	*(Branchinecta lynchi)*	**Threatened**
Hoover's Spurge (and its CH)	*(Chamaesyce hooveri)*	**Threatened**
Western Yellow-billed Cuckoo (and its proposed CH)	*(Coccyzus americanus occidentalis)*	**Threatened**
Valley Elderberry Longhorn Beetle (and its CH)	*(Desmocerus californicus dimorphus)*	**Threatened**
Delta Smelt (and its CH)	*(Hypomesus transpacificus)*	**Threatened**
Vernal Pool Tadpole Shrimp (and its CH)	*(Lepidurus packardi)*	**Endangered**
Central Valley Steelhead (and its CH)	*(Oncorhyncus mykiss*)	**Threatened**
Central Valley Spring-run Chinook Salmon (and its CH and EFH)	*(Oncorhyncus tshawytscha)*	**Threatened**
Sacramento River Winter-run Chinook Salmon (and its CH and EFH)	*(Oncorhyncus tshawytscha)*	**Endangered**
Hairy Orcutt Grass (and its CH)	*(Orcuttia pilosa)*	**Endangered**
Slender Orcutt Grass (and its CH)	*(Orcuttia tenuis)*	**Threatened**
California Red-legged Frog (and its CH)	*(Rana draytonii)*	**Threatened**
Giant Garter Snake	*(Thamnophis gigas)*	**Threatened**
Greene's Tuctoria (and its CH)	*(Tuctoria greenei)*	**Endangered**
Least Bell's Vireo (and its CH)	*(Vireo bellii pusillus)*	**Endangered**

Federal Species of Concern
Central Valley Fall- / Late Fall-run Chinook Salmon EFH *(Oncorhyncus tshawytscha)*

Quads Searched for Listed and Proposed Species

A species list (Appendix A) was generated using the USFWS Sacramento Fish and Wildlife Office website (USFWS 2015) for the U.S. Geological Survey (USGS) Los Molinos (610D) 7.5' quadrangle, in which the project is located.

Species Eliminated from Further Consideration

The following species and / or CH were eliminated from further discussion in the document based on lack of suitable habitat in, or near the project area or because the project lies outside of the species' known range:

The southern Distinct Population Segment (DPS) of green sturgeon was eliminated because this species is not known, or expected to use Mill Creek. The project is not located within the designated CH for the Southern DPS of the green sturgeon.

Conservancy fairy shrimp was eliminated because the project is not located within the known range of the species and no potential habitat exists within the project area. The project is not located within the designated CH for the Conservancy fairy shrimp.

Vernal pool fairy shrimp was eliminated because no potential habitat exists within the project area. The project is not located within the designated CH for the vernal pool fairy shrimp.

Hoover's spurge was eliminated because this species was not detected during botanical surveys and no potential habitat exists within the project site. The project is not located within the designated Hoover's spurge CH.

Valley elderberry longhorn beetle was eliminated because suitable habitat (elderberry shrubs with stems greater than, or equal to, one inch in diameter) is not present within the project boundary or within 100 feet from the project boundary. The project is not located within the designated valley elderberry longhorn beetle CH.

Delta smelt was eliminated because the project is not located within the known range of the species. The project is not located within the designated Delta smelt CH.

Vernal pool tadpole shrimp was eliminated because no potential habitat exists within the project area. The project is not located within the designated vernal pool tadpole shrimp CH.

Sacramento River winter-run Chinook salmon Evolutionary Significant Unit (ESU) was eliminated because this run is not known, or expected to use Mill Creek for holding or spawning. Non-natal rearing may occur at the mouth of Mill Creek and the Sacramento River and a small distance upstream if water temperatures are favorable (Maslin et al. 1999), but the project is located approximately 2.6 River Miles (RM) upstream of the Sacramento River. The project is not located within the designated Sacramento River winter-run Chinook salmon ESU CH.

Hairy orcutt grass was eliminated because this species was not detected during botanical surveys and no potential habitat exists within the project site. The project is not located within the designated hairy orcutt grass CH.

Slender orcutt grass was eliminated because this species was not detected during botanical surveys and no potential habitat exists within the project site. The project is not located within the designated slender orcutt grass CH.

California red-legged frog was eliminated because the results of surveys conducted, while not full protocol level, did not detect any California red-legged frog. While some marginal, potentially suitable habitat is present within the project site, there have been no recorded observations at the project site and

surrounding quadrangles. The nearest recorded observation is approximately 27 miles from the project, near Sunflower Gulch and Red Bank Creek in western Tehama County. California red-legged frog is generally believed to have been extirpated from the Central Valley. The project is not located within or near the designated California red-legged frog CH.

The giant garter snake was eliminated because the project is not located within the known range of the species.

Greene's tuctoria was eliminated because this species was not detected during botanical surveys and no potential habitat exists within the project site. The project is not located within the designated Greene's tuctoria CH.

Least Bell's vireo was eliminated because the project is not located within the known range of the species. The project is not located within the designated least Bell's vireo CH.

The results of a botanical survey and evaluation, surveyed during the appropriate blooming period in 2014, indicated that no federally-listed plant species were encountered and that the likelihood of the presence of any federally-listed plant species was low (Dittes & Guardino Consulting 2014).

Critical Habitat

Legal Status

The following designated CHs occur in the Action Area. The inland habitat types, as per the NMFS definition are also identified for each species / ESU in their relation to the project area (spawning habitat, freshwater rearing habitat and freshwater migration corridors).

CH for the Central Valley steelhead DPS was designated by NMFS on September 2, 2005 (70 FR 52488). The project is located within the designated CH for Central Valley steelhead DPS.

CH for the Central Valley spring-run Chinook salmon was designated by NMFS on June 16, 1993 (58 FR 33212). The project is located within the designated CH for Central Valley spring-run Chinook salmon.

CH for Central Valley spring-run Chinook salmon and steelhead is defined as specific areas that contain Primary Constituent Elements (PCE) and physical habitat elements essential to the conservation of the species. Following are the inland habitat types used as PCEs for Central Valley spring-run Chinook salmon and Central Valley steelhead:

Spawning Habitat

Freshwater spawning sites are those with water quantity and quality conditions and substrate supporting spawning, incubation, and larval development. Spawning habitat has a high conservation value as its function directly affects the spawning success and reproductive potential of listed salmonids.

Freshwater Rearing Habitat

Freshwater rearing sites are those with water quantity and floodplain connectivity to form and maintain physical habitat conditions and support juvenile growth and mobility; water quality and forage supporting juvenile development; and natural cover such as shade, submerged and overhanging large wood, log jams and beaver dams, aquatic vegetation, large rocks and boulders, side channels, and undercut banks. Both spawning areas and migratory corridors comprise rearing habitat for juveniles, which feed and grow before, and during, their outmigration. Non-natal intermittent tributaries may be used for juvenile rearing. Rearing habitat condition is strongly affected by habitat complexity, food supply, and presence of

predators of juvenile salmonids. Freshwater rearing habitat also has a high conservation value as the juvenile life stage of salmonids is dependent on the function of this habitat for survival and recruitment.

Freshwater Migration Corridors

Ideal freshwater migration corridors are free of obstruction with water quantity and quality conditions and contain natural cover such as submerged and overhanging large wood, aquatic vegetation, large rocks and boulders, side channels, and undercut banks supporting juvenile and adult mobility, survival and food supply. These corridors allow the upstream passage of adults, and the downstream emigration of out-migrant juveniles. Migratory habitat condition is strongly affected by the presence of barriers, which can include dams, unscreened or poorly-screened diversions, and degraded water quality. For successful survival and recruitment of salmonids, freshwater migration corridors must function sufficiently to provide adequate passage. For this reason, freshwater migration corridors are considered to have a high conservation value.

Essential Fish Habitat

The MSA requires the identification of EFH and the implementation of measures to conserve and enhance habitat with a Fishery Management Plan (FMP), for Federally-managed fishery species that may be adversely affected by a federal action.

EFH is defined as those waters and substrate necessary to fish for spawning, breeding, feeding or growth to maturity. For the purpose of interpreting the definition of essential fish habitat, "waters" includes aquatic areas and their associated physical, chemical, and biological properties that are used by fish, and may include areas historically used by fish where appropriate; "substrate" includes sediment, hard bottom, structures underlying the waters, and associated biological communities; "necessary" means habitat required to support a sustainable fishery and a healthy ecosystem; and "spawning, breeding, feeding, or growth to maturity" covers all habitat types used by a species throughout its life cycle.

The proposed project **is** within the EFH of "Pacific Salmon". Therefore, potential effects to EFH for Central Valley spring-run and fall- / late-fall run Chinook salmon is assessed in this document.

II. CONSULTATION TO DATE

Several discussions were held with Ms. Gretchen Umlauf and Mr. Steve Thomas of NMFS during Mill Creek Technical Team meetings from 2013 to 2015. In addition, informal consultation meetings occurred between:

- Ms. Patricia Parker Hamelberg of USFWS, Ms. Brenda Olsen of USFWS and Ms. Gretchen Umlauf of NMFS (January 9, 2015)

- Mr. Jeff Souza of TES, Ms. Kelly Peterson of TES and Mr. Jason Hanni of USFWS (January 28, 2015)

III. PROPOSED ACTION

Project Location

The project is located on private property approximately three miles northeast of Los Molinos, in Tehama County, California (Figure 1). Specifically, the project is located at the Ward Dam on Mill Creek, at approximately RM 2.6, upstream of the confluence with the Sacramento River, in Section 3, Township 25 North, Range 2 West MDBM, within the 7.5-minute USGS Los Molinos quadrangle map (Figure 2). The project occurs in the Hydrologic Unit Code (HUC) USGS Cataloging Unit: 18020119 (Mill-Big Chico). An aerial photo of the project area is included as Figure 3.

Background

The Central Valley Project Improvement Act (CVPIA) [Title 34 of Public Law 102-575, Section 3406(b)(1)], authorizes and directs the Secretary of the Department of the Interior (DOI), in consultation with other State and Federal agencies, Native American tribes, and affected interests, to develop and implement a program which makes all reasonable effort to at least double natural production of anadromous fish in California's Central Valley rivers and streams. Further, the CVPIA requires that this program give first priority to measures which protect and restore natural channel and riparian habitat values through habitat restoration actions, modifications to Central Valley Project operations, and implementation of the supporting measures mandated by the CVPIA. The DOI is approaching implementation of this directive through development of an Anadromous Fish Restoration Program (AFRP) (USFWS 2001).

The project is being implemented by the USFWS, in cooperation with the private landowners and the Mill Creek Fish Passage Restoration Project Technical Advisory Committee (TAC), comprised of representatives from USFWS, NMFS, U.S. Bureau of Reclamation (Reclamation), California Department of Fish and Wildlife (CDFW), formerly the California Department of Fish and Game (CDFG), California Department of Water Resources (CDWR), Mill Creek Conservancy, Los Molinos Mutual Water Company (LMMWC), multiple private landowners and several private consulting firms. The project is being funded by a grant from the USFWS AFRP.

The project is located in the Sacramento Valley portion of the 134-square-mile, Mill Creek watershed. The Mill Creek watershed is comprised of terrain varying from gradually sloping to very steep, has a general western aspect and drains to the west. Mill Creek is a 60-mile-long, southwest flowing, perennial creek. Originating from the southern facing slopes of Lassen Peak, in Lassen Volcanic National Park (LVNP), Mill Creek eventually flows into the Sacramento River near the towns of Tehama and Los Molinos, California.

The project involves the Ward Dam which is located on a privately-owned working organic cattle ranch referred to as the "Mill Creek Ranch". Ward Dam is part of a private stream diversion system that supplies irrigation water for agricultural and residential uses through LMMWC. It is owned by the LMMWC. Ward Dam is located approximately 1.25 miles upstream of the Shasta Boulevard Bridge and approximately 4,000 feet downstream of another diversion dam on Mill Creek referred to as the "Upper Dam". The elevation of Ward Dam is approximately 291 feet. It is in a wide section of Mill Creek where the south channel bank is above the 100-year water surface elevation. The dam has been in place for at least 50 years and it has impounded coarse sediment up to an elevation of approximately 290 feet behind the dam crest. The deposits extend approximately 200 feet upstream of the dam crest.

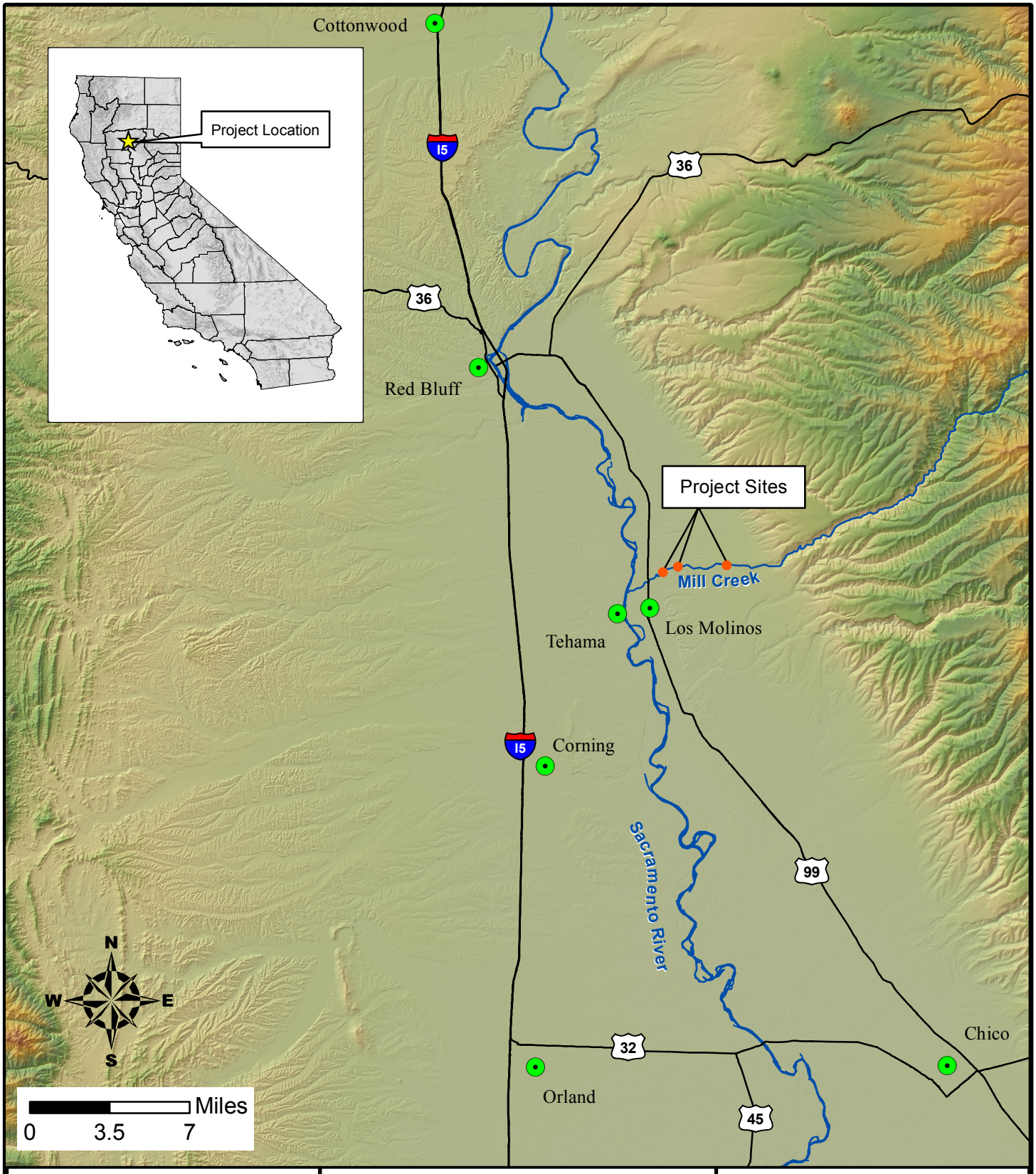

TEHAMA
ENVIRONMENTAL SOLUTIONS, INC.
910 Main Street, Suite D, Red Bluff, CA 96080
(530) 528-8272
www.tehamaenvironmental.com

Biological Assessment

Mill Creek Fish Passage Restoration Project

Tehama County, California

February 2014

FIGURE 1

Site Vicinity Map

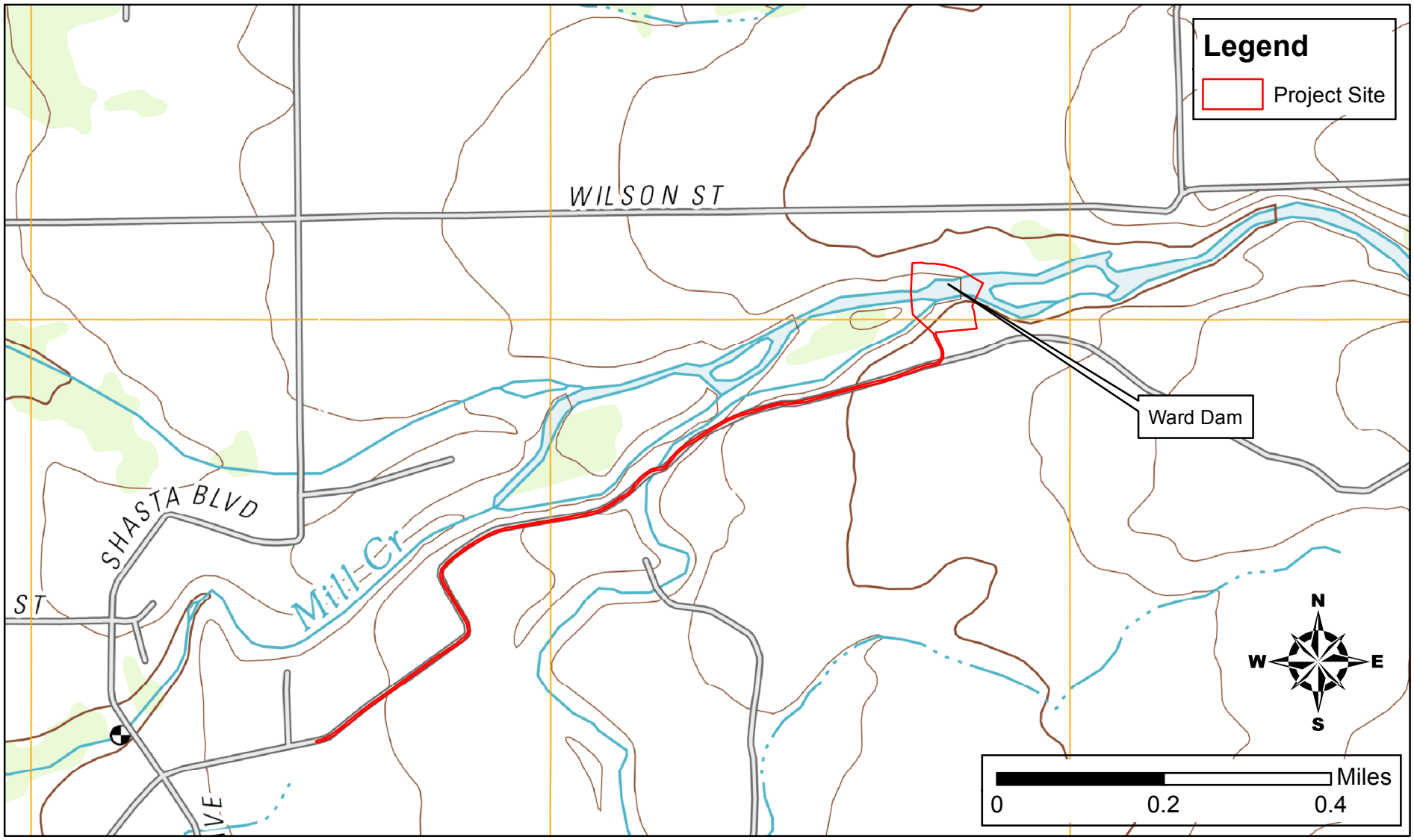

TEHAMA
ENVIRONMENTAL SOLUTIONS, INC.
910 Main Street, Suite D, Red Bluff, CA 96080
(530) 528-8272
www.tehamaenvironmental.com

Biological Assessment

Mill Creek Fish Passage Restoration Project - Ward Dam

Tehama County, California

February, 2015

FIGURE 2

Site Location Map

PHOTO SOURCE: Google Earth, 8/27/2013

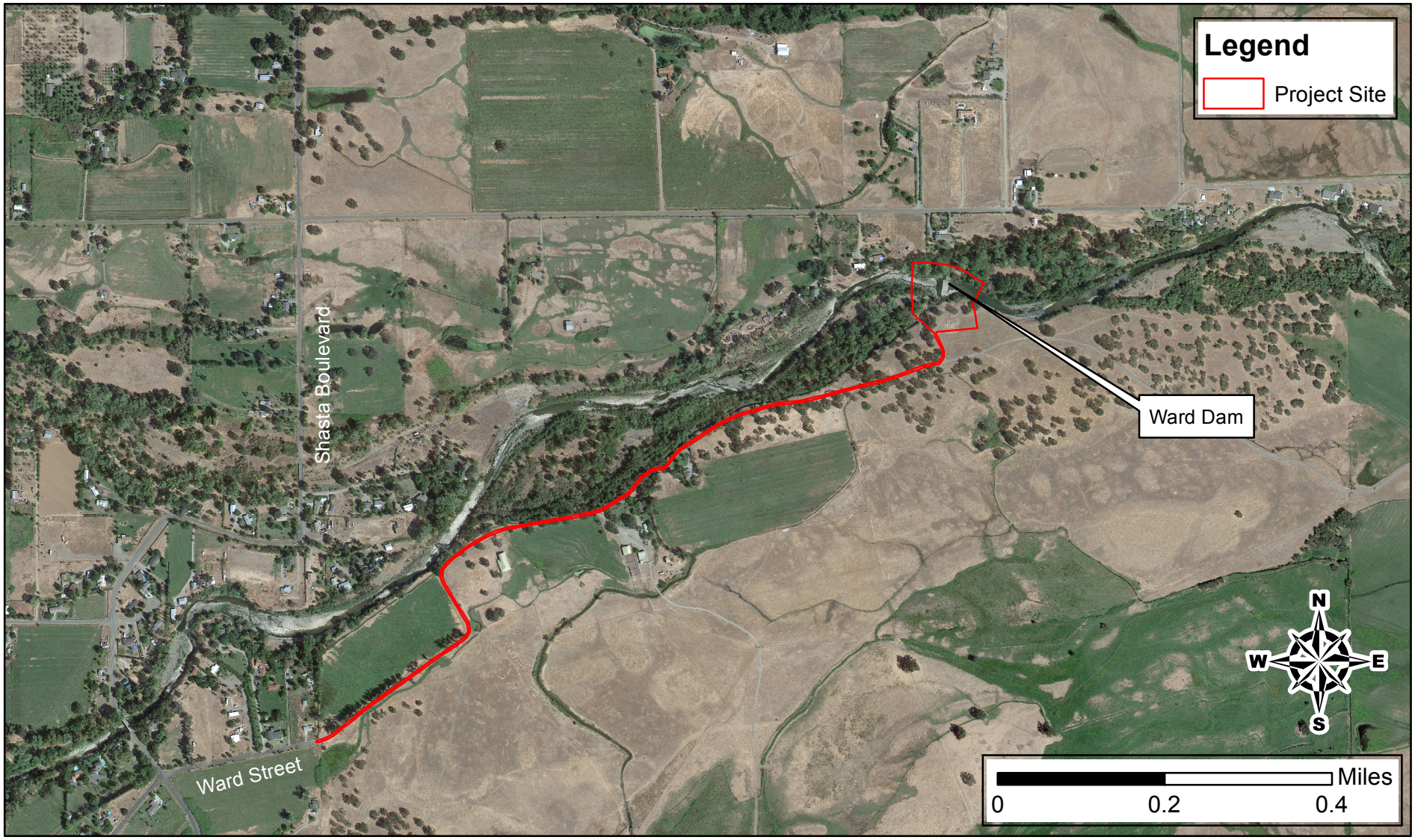

TEHAMA
ENVIRONMENTAL SOLUTIONS, INC.
910 Main Street, Suite D, Red Bluff, CA 96080
(530) 528-8272
www.tehamaenvironmental.com

Biological Assessment

Mill Creek Fish Passage Restoration Project - Ward Dam

Tehama County, California

February, 2015

FIGURE 3

Site Aerial Photo

PHOTO SOURCE: Google Earth, 8/27/2013

Water diversions from Ward Dam [up to 50 cubic feet per second (cfs) capacity] provide customers with irrigation and stock water and typically begin in the spring and end in late fall / early winter, prior to winter floods. Water levels at the Ward Dam are maintained for diversion at a headgate, where an open canal then conveys diverted flows to the fish screen. Flows can then be diverted through the fish screen and continue down the canal or through a fish bypass pipeline which outfalls into Mill Creek, downstream of the dam. Flows in excess of the diverted amounts, when present, flow down the fish ladder and/or over the dam face, depending on flow conditions.

The Ward Dam and its associated facilities have been maintained and upgraded over time and include the 85-foot-wide, six-foot-high, slope-faced concrete dam which spans the active channel of Mill Creek, an off-channel pool-and-chute fish ladder (four pools and five weirs) and a 60-foot-long by 4-foot-deep inclined- diagonal, perforated flat plate, off-channel (in-canal) juvenile fish screen. The screen is cleaned by an electrically-powered reciprocating gang wiper. A 79-foot-long, fish bypass pipe, located near the fish screen, returns flows and fish to Mill Creek downstream of the dam. A sluice gate diversion intake structure and a diversion canal are also part of the Ward Dam facilities. The Ward Dam was once re-grouted along the right abutment to repair erosion caused by floods, which resulted in lengthening it by 50 feet. Additionally, in 1997, CDFW constructed the downstream slope on the face of the dam, the 80-foot-long open diversion canal, fish screen and bypass pipe. The Mill Creek Fish Passage Phase 1 Predesign Report (NHC 2011) provides a detailed description of the fish ladder and fish screen.

A number of fish passage deficiencies exist with the Ward Dam facilities. The fish ladder on the Ward Dam is functional and meets CDFW and NMFS adult fish passage criteria (NMFS 1997a) at flows equal to or less than 90 cfs; however, during higher flows it does not. This has the potential to delay fish migration during higher flow events. During these higher flows, fish have difficulty in locating the inlet to the fish ladder because of turbulence. The fish ladder does not currently meet fish passage criteria for juveniles at any flow rate. A scour hole five- to eight-feet deep has formed along the dam toe which could potentially lead to dam and fish ladder failure. Sediment accumulates in front of the existing diversion intake gate during winter flows and is then flushed into the diversion canal when the gates are opened. Sediment deposits have accumulated in front of, and behind the screen, reducing its operational capabilities. Debris also accumulates at the inlet of the bypass return pipe, affecting flows through the screen and bypass pipe. The fish screen and the fish screen bypass outlet are not meeting established NMFS criteria during certain flow conditions and the sweeping velocities at the upstream end of the screen are negative. The bypass return pipe also creates difficult conditions for fish to return to the stream due to its configuration and predation occurs at the outfall of the bypass pipe outlet.

The TAC selected an alternative that keeps the Ward Dam in place and replaces and upgrades the existing fish ladder and diversion infrastructure to provide native fish upstream and downstream passage over a larger range of flows. As part of the alternative, the fish ladder will be replaced, the existing on-canal fish screen will be augmented to improve approach and sweeping flows, the bypass return pipe will be replaced and relocated, the intake head gate will be relocated upstream and a rock scour apron will be installed downstream of the Ward Dam.

Project Purpose

The purpose of the proposed project is to improve upstream and downstream passage for anadromous fish and other native aquatic species in Mill Creek. The upgrades and modifications to the fish ladder, fish screen and water diversion infrastructure will provide improved passage for adult migration upstream and juvenile emigration downstream of the Ward Dam.

Project Description

Below is a bulleted list of the design features followed by a more detailed description of each aspect of the project. The 95% Design Plan Drawings are included in Appendix B. The 95% Basis of Design document is included in Appendix C.

Phase 1 - Instream Work (Mid-Summer)

- Placement of the rock scour apron
- Demolition / construction of the existing / new fish ladder
- Construction of the instream portion of the new diversion intake and the new bank upstream of the diversion
- Installation of the new bypass pipe

Phase 2 – Post-diversion Work (Fall)

- Retrofitting of fish screen and construction of new diversion canal
- Connection of bypass pipe inlet to canal

Other Project Items

- Site access
- Flow diversions during construction, dewatering and rewatering
- Diversion operations
- Revegetation

Rock Scour Apron

Scour along the downstream face of Ward Dam is typically approximately three feet with maximum depths of approximately eight feet. The dam toe is exposed where scour is deepest. Installation of a rock scour apron downstream of Ward Dam will prevent the undermining of the dam face by scour and potential dam and fish ladder failure. The scour hole starts at the toe of the dam and extends approximately 50 feet downstream. The lowest scour elevation occurs near the south side of the dam, near the existing fish ladder and is approximately nine feet below the assumed bed elevation at the time of dam construction. The increased scour depth likely resulted from the flow over the dam face interacting with the fish ladder wall. There is also a shallower scour hole on the north side of the dam which is approximately four feet lower than the assumed stream bed elevation at construction.

The design of the rock scour apron is based on the size of the rock required for stability at the 100-year peak flow and the top elevation. The gradation, extent and thickness of the rock scour apron is detailed in Appendix B. The general goal of the design of the rock scour apron is to protect the dam toe from scour while not modifying the downstream riffle.

The crest of the rock scour apron will have a mild downstream slope of approximately one percent in order to avoid ponding and potential stranding of fish on the south and north sides of the dam. The rock scour will extend up the banks to provide protection from erosion. The minimum rock thickness for the rock scour apron is set to four feet and the existing bed will be excavated to meet this thickness, where needed. Excavated bed material will be stored and placed on the top of the rock scour apron, up to a maximum thickness of six inches.

Fish Ladder

The existing fish ladder will be removed and a new fish ladder will be constructed. The new fish ladder will meet the hydraulic design criteria outlined in Flosi et al. (2010) for upstream migrating adult salmonids, which includes maintaining jump heights of one foot or less, providing adequate attraction flow through the ladder, and ensuring adequate pool volume to allow for turbulence dissipation (NHC 2015). A pool-and-chute fish ladder is proposed for the project. The proposed design will extend the fish ladder downstream approximately nine feet and upstream approximately 18.5 feet. The ladder will have nine weirs and will have a 0.9-foot drop between the 8-foot long pools. Appendix B shows the typical weir dimensions. The typical notch height is 0.25 feet, with the upstream two weirs notch height increased to 0.5 feet at the second weir, and 0.75 feet at the upstream weir. The increased notch height follows the recommendations of Bates (1991) to account for the increased drop in water levels over the first two weirs due to the increasing velocity head. NMFS (2011) recommends a one- to 1.5-foot drop at fish ladder entrances to increase attraction. The entrance weir has an invert elevation of 284.8 feet, and should have a 0.5 foot drop under existing conditions. The low weir elevation ensures that the jump height into the fish ladder will be less than 1.5 feet, should water levels at the entrance decrease by one foot due to future changes in the downstream channel. The exit weir crest is at elevation 290.4 feet.

Flow through the center notch of the fish ladder will begin to transition to streaming flow at approximately nine cfs. The depth of flow over the notch on the upstream weir will be just over one foot at this flow rate, submerging the lower 0.25 feet of the sloping weirs. The nine cfs streaming depth over the downstream weirs is expected to be 0.5 feet which would maintain a 0.25-foot submergence on the sloping weirs. At the design high flow, flow depth over the upstream-most weir is approximately 3.1 feet and the fishway flow is approximately 140 cfs. The streaming flow depth is two feet, resulting in an average drop of approximately 1.15 feet over the first two weirs. Appendix B provides further details of the design calculations, the stream flow condition at the entrance and exit of the fish ladder (for upper and lower limit fish passage flows) and the typical section of the fish ladder design. The upper and lower limit fish passage water surface profiles and structure dimensions are also shown in Appendix B. The design meets all NMFS (2011) fish ladder criteria. Wall heights are set to one foot above the computed two-year event water level, and four feet above the upper limit flow water surface elevations.

Diversion Intake / New Bank

The diversion intake will be realigned and moved upstream of the new fish ladder to reduce sediment deposition. The new diversion intake will be located approximately 40 feet upstream of the existing intake. The proposed design aligns the gate to be parallel to the stream flow and, during high flow events, sweeping velocities will push sediment past the gate structure. The intake will be controlled by two 10-foot-wide weir gates. A trash rack with 11-inch spaced bars will protect the diversion infrastructure from large debris.

The adjustments to the diversion intake require excavation of the existing bank and construction of new diversion canal walls and floor. The bank near the intake will be excavated back to a 2H:1V slope, and reconstructed as a vegetated reinforced soil slope (VRSS). The VRSS uses vegetation plantings and geosynthetic fabrics to stabilize the slope.

Fish Screen and Diversion canal

The retrofits to the existing fish screen meet the guidelines defined in Volume 1, Appendix S of the *California Salmonid Stream Habitat Restoration Manual* (Flosi et al. 2010) and NMFS Southwest Region's *Fish Screening Criteria for Anadromous Salmonids* (NHC 2015). The newly constructed diversion canal walls will extend down to the fish screen and will be re-constructed to decrease the width in front of the fish screen in order to meet screen criteria. The new diversion wall will be built to equivalent wall heights as the existing diversion walls, and will be concrete. The canal near the fish screen will maintain sweeping velocities in front of the screen of one-to-two feet per second.

The existing fish screen will be fitted with a steel plate to isolate each five-foot length of screen bay. The upgrades to the screen also include louver frames constructed to fit into the existing flashboard slots behind the screen. When in place, the louvers will allow for flow to be balanced across the face of the screen.

Bypass Return Pipe

The existing 15-inch diameter return pipe will be replaced with a 120-foot-long, 18-inch diameter high-density polyethylene pipe. The new bypass outlet will be located in the second pool of the proposed fish ladder. The pipe inlet and outlet invert elevations will be at 287.6 and 286.8, respectively.

The pipe slope is approximately 0.005 feet per feet with a minimum 2.5 cfs bypass flow, the outfall of the bypass pipe will be a one-foot plunge into a 3.5-foot deep pool on the fish ladder. Flow in the pipe will remain open channel flow until the non-diverted streamflow exceeds approximately 2,000 cfs, which is unlikely to occur during the diversion season. A minimum bypass flow of 5.25 cfs will be required to meet NMFS (1997a) depth criteria. The depth and velocity for various bypass flow rates is detailed in Appendix B along with the bypass pipe hydraulics and design considerations.

Site Access

Access to the site is via Ward Street. The Ward Dam staging area is proposed for the south bank adjacent to the project site. A temporary bridge over the diversion canal for instream construction access will be required. The access route to the dam face will be constructed for trucks and heavy machinery and will be located from the temporary bridge, across the existing gravel bar, to the area downstream of the dam. This route will require approximately seven yards of temporary fill which will be local alluvium excavated from the project site. Some clearing of the vegetation on the floodplain will be required.

The contractor will be responsible for developing a traffic and temporary site access plan, including restoring all access roads to the condition prior to construction. LMMWC will be responsible for negotiating access, rights of way, and other issues with local property owners.

Flow Diversions during Construction, Dewatering and Rewatering

The instream portion of Phase 1 work will include placement of the rock scour apron, demolition of the existing fish ladder, construction of the new fish ladder, construction of the new bypass pipe and outlet, construction of the instream portion of the new diversion intake and construction of the new VRSS bank upstream of the diversion.

Phase 1 work will begin during the mid-summer and is targeted to begin when the LMMWC diverts all streamflow at Ward Dam. This phase is expected to take approximately two months to complete. Based on the timing of Mill Creek flows in typical years, the instream work of Phase 1 could be completed with all instream flow passing through the LMMWC diversion canal. If all flows are able to be diverted, during the timing of Phase 1 construction, Mill Creek below Ward Dam will have dry instream conditions. Demolition and construction of the existing and new fish ladder, construction of the diversion intake and construction of the VRSS bank will require isolation of the construction areas from water in

Mill Creek. The isolation structures would likely consist of a water-filled bladder or gravel bags, or other suitable materials and would be placed so that flows will continue to enter the existing Ward Dam diversion. During the fish ladder construction, stream flow will pass over the dam crest and it will be necessary to isolate the construction site from these flows also. Localized site dewatering is anticipated during this portion of construction as well.

In wet years, such as 2011, flows remain above the LMMWC diversion capacity until late in September. In such a year, additional bypass capacity will be required to construct the rock scour apron with dry instream construction conditions. Approximately 20 cfs to 30 cfs would need to be routed around the construction in typical wet year flows. Bladder dams would be used to direct water toward the north bank, allowing construction of most of the rock scour apron, and then moved to direct water to the south bank to complete the construction. If needed, flows can potentially be diverted through the Ward Dam diversion and spilled into Mill Creek further downstream.

Seepage is anticipated at both sites and construction water will be pumped onto the adjacent floodplains so that it infiltrates and returns to Mill Creek as groundwater downstream of the construction site. Permit conditions may require a different approach.

Design details for diversion, dewatering and rewatering will be prepared by the contractor to meet the conditions in the environmental documents and permits, and submitted to the project owner and engineer for approval.

LMMWC typically reduces their diversion rates from early- to late-October, using October 15 as the target date for the end of the diversion season. The decision to end the diversion season is made in close coordination with CDFW and is based on various factors. Overall precipitation for the year influences the decision to stop diverting irrigation water, as rainfall not only influences LMMWC's irrigation demand, but also influences Mill Creek's water temperatures and hydrologic connectivity to the Sacramento River. A natural sediment bar forms at the mouth of Mill Creek in most years and depending on conditions, forms a partial barrier for fish entering Mill Creek. The diversion season end dates are targeted to coincide with natural rainfall events in an effort to maximize flows. In low rainfall years, the irrigation season has been known to continue into the month of November.

After the diversion season ends, likely in October, and the diversion canal is dry, the new diversion canal will be constructed, the fish screen will be retrofitte, and the new bypass pipe inlet will be connected into the diversion canal and installed, comprising the instream portion of Phase 2 construction activities. Some local dewatering is anticipated near the new diversion intake to allow for finishing of the diversion canal and placement of the new weir gates and trash rack. This instream work is expected to take approximately one month to complete. All other Phase 2 work will take place in the dry diversion canal and on the bank above and is expected to take approximately one additional month.

Upon completion of each phase of the project, the construction site will be slowly rewatered to prevent a sudden increase in stream turbidity. During rewatering, the site will be monitored to prevent stranding of aquatic organisms.

Diversion Hydraulics under Project Conditions

The flow into the diversion canal is controlled by a Parshall Flume located approximately 80 feet downstream of the existing screen. The flume has a six-foot throat width with an invert elevation of 288.6 feet. For the maximum diversion flow of 50 cfs, the flume will create a backwater elevation of 290.3 feet. The exit weir of the fish ladder is set to 290.4 feet. These elevations are approximately 0.5 feet lower than the crest of the dam.

The proposed flow control structures will be located on the diversion canal; hence, LMMWC will be able to reduce diversion flows and increase flows through the fish ladder or over the dam if required. Flashboards will not be required in the fish ladder to ensure flow requirements are met.

The weir gate at the diversion intake will be set with a bottom elevation of 290.0 feet and will be adjusted to control flow into the diversion. The bypass pipe will also have a slide gate to allow for adjustment of bypass flows. The fish ladder will pass 100 percent of the non-diverted streamflow up to approximately four cfs. Above four cfs, the fish ladder will pass approximately 8 percent of the total streamflow.

Under current operations, LMMWC often diverts all of the streamflow during late summer. In previous years, instream flow agreements have been put into place through a memorandum of understanding between both LMMWC and CDFW and LMMWC and NMFS. These are in the process of being drafted to outline future operations, but at this time, no formal agreements exist.

Revegetation

A revegetation plan will be prepared as part of the submissions for permits for this project to replace impacted riparian wetlands by a measure of quantity and quality equal to or exceeding impacts of the project using appropriate native riparian trees and shrubs. Following construction, vegetated areas that have been disturbed, will be revegetated in accordance with the revegetation plan.

Resource Protection Measures

The project includes a number of Resource Protection Measures (RPMs) which were developed to protect sensitive resources that could potentially be impacted by the project and are hereby incorporated into the project description and plans. The project is designed through spatial and temporal avoidance measures to eliminate temporary and permanent impacts to listed species and their habitats. These RPMs and project components are summarized below:

Biological Resources

- VEGETATION-1: Disturbance to existing vegetation will be avoided or minimized to the extent possible.

- VEGETATION-2: Disturbance to riparian vegetation will be avoided or minimized to the extent possible.

- VEGETATION-3: All heavy equipment shall be thoroughly cleaned prior to mobilization onsite to remove any soil, weed seeds and plant parts to reduce the importation and spread of invasive exotic plant species.

- VEGETATION-4: Only certified weed-free straw shall be used for erosion control or other purposes to reduce the importation and spread of invasive exotic plant species.

- VEGETATION-5: A revegetation plan will be prepared to replace impacted riparian wetlands by a measure of quantity and quality equal to or exceeding impacts of the project using appropriate native riparian trees and shrubs.

- VEGETATION-6: Areas with woody vegetation that have been disturbed will be revegetated in accordance with the revegetation plan.

- VEGETATION-7: No smoking will be allowed on the construction site or within the Action Area, for fire prevention purposes.

- VEGETATION-8: Herbicide treatment will not be allowed in the project area.

- WILDLIFE-1: Prior to work in aquatic habitats, water bodies shall be surveyed by a qualified biologist to determine if any foothill yellow-legged frogs or western pond turtles are present. If any individuals of these species are found, a qualified and permitted biologist shall determine and implement appropriate relocation procedures. Herpetological exclusion fencing shall be erected around the perimeter of the instream work area prior to construction initiation. Fencing shall remain until work in aquatic habitats is complete.

- WILDLIFE-2: A biologist experienced in the identification of amphibian species (particularly *Rana* species) will ensure that no California red-legged frogs are present within any of the disturbance areas. If any California red-legged frogs are found to be present, all potentially disturbing construction activities will be suspended until appropriate protective measures can be developed in consultation with the USFWS ESA staff.

- WILDLIFE-3: Measures VEGETATION-2, VEGETATION-5 and VEGETATION-6 associated with the avoidance and restoration of riparian vegetation will be fully implemented.

- WILDLIFE-4: Measures WATER-2 through WATER-5 associated with minimizing impacts to water quality will be fully implemented.

- WILDLIFE-5: Any tree removal, vegetation disturbance and / or the onset of potentially disturbing construction activities should occur between August 1 and February 1 (outside of the combined breeding season for songbirds, raptors and other migratory bird species).

- WILDLIFE-6: If tree removal, vegetation clearing, or the onset of potentially disturbing construction activities must occur during the nesting season, a nesting survey of the construction area and adjacent suitable habitat should be conducted by a qualified biologist no more than seven days prior to the initiation of the onset of these activities. If active bird nests are found to be present, tree removal, vegetation clearing and the onset of potentially disturbing construction activities shall be suspended until a qualified biologist, in consultation with CDFW can establish an appropriate protective buffer area to minimize impacts to the nesting birds. No construction activities should commence within the buffer area until the qualified biologist determines that the young birds have fledged or the nest is no longer active.

- WILDLIFE-7: Prior to any vegetation removal, a survey of the vegetation to be removed shall be conducted by a qualified biologist to ensure that pallid bats are not roosting in the vegetation to be removed.

- WILDLIFE-8: If pallid bats are found to be roosting within the vegetation to be removed, vegetation removal shall be suspended until a qualified biologist, in consultation with CDFW, can establish appropriate measures to minimize impacts to this species.

- WILDLIFE-9: A construction worker education program shall be implemented for all personnel on site that includes an explanation of all special-status animal species, with the potential to occur identification, avoidance measures, and federal and state laws that protect the species. This shall include, at a minimum, those species described above.

- WILDLIFE-10: To ensure that no impacts to VELB habitat occur, all elderberry shrubs with stems greater than one inch in diameter, located within 100 feet of the project site will be fenced with high-visibility fencing.

- WILDLIFE-11: Potential ringtail denning habitat exists within the project in the form of hollow trees. Prior to construction a biologist will inspect potential denning sites for signs of denning. If ringtail are found to be denning, construction activities will be suspended until a qualified biologist, in consultation with CDFW, can establish appropriate measures to minimize impacts to ringtail.

- WETLAND-1: Measures VEGETATION-2, VEGETATION-5 and VEGETATION-6 associated with the avoidance and restoration of riparian vegetation will be fully implemented.

- WETLAND-2: Project activities will avoid impacts to wetlands to the extent possible.

- WETLAND-3: High-visibility fencing will be installed in areas where equipment will be working near any wetlands and / or riparian habitat that are not to be disturbed.

- WETLAND-4: Construction crews will be informed about the importance of avoiding sensitive areas, including wetlands.

- WETLAND-5: All vehicular traffic will be restricted to stay within the designated work boundaries. The work boundaries will be flagged or fenced and identified on construction drawings to limit equipment and personnel to the minimum area necessary to perform the project work and minimize impacts to wetland habitat.

- WETLAND-6: Because construction of the site requires that disturbance occur, and / or fill material be placed within wetlands or other waters of the U.S., a Clean Water Act Section 404 permit will likely be required from the U.S. Army Corps of Engineers. In addition, a Clean Water Act Section 401 Certification may also be required from the Central Valley Regional Water Quality Control Board (CVRWQCB). It has been determined that a CDFG Code Section 1600 Lake or Streambed Alteration Agreement with CDFW will not be required.

- WETLAND-7: Measures WATER-3 through WATER-5 associated with potential petroleum product spills will be fully implemented.

- FISH-1: Phase 1 work shall be conducted between July 15 and October 14 to minimize impacts to anadromous fish by working when water temperatures are warmer and anadromous fish are less likely to be present. Phase 2 work within the channel and banks, outside of this instream work window must be isolated from flowing water and fish rescue will be required prior to the onset of any dewatering of the area.

- FISH-2: All construction debris (concrete, metal etc.) from the fish passage improvement-related construction activities will be removed from the active stream channel post-construction.

- FISH-3: Measures VEGETATION-2, VEGETATION-5 and VEGETATION-6 associated with the avoidance and restoration of riparian vegetation will be fully implemented.

- FISH-4: Measures WATER-2 through WATER-5 associated with minimizing impacts to water quality will be fully implemented.

- FISH-5: Prior to construction, exclusionary fish netting shall be installed upstream and downstream of the construction area. The USFWS, in coordination and consultation with NMFS and CDFW, will ensure that qualified fish biologists are onsite to implement fish rescue operations through the use of herding, seining and / or electrofishing, if necessary. Best professional determination will be used to decide which method(s) of rescue and location of exclusionary netting is most appropriate. Biologists will first try to haze and herd fish out of the fish exclusion area. If fish biologists determine that the use of electrofishing is necessary for the efficient and successful removal of fish, the NMFS electrofishing guidelines (NMFS 2000) will be strictly followed. The fish rescue team will be comprised of fishery biologists with professional experience using seines and electrofishing equipment.

- FISH-6: Adequate erosion and pollution control measures should be taken to ensure that sediment, turbidity, petroleum products or other harmful chemicals do not enter Mill Creek as a result of construction activities. Standard Best Management Practices should be incorporated into the project designs.

- FISH-7: BMP's will be developed and implemented to ensure that wet concrete does not enter Mill Creek during construction.

- FISH-8: All pumps used during dewatering for construction will be screened to meet CDFW and NMFS criteria.

- FISH-9: All dewatering and rewatering activites will be conducted slowly, in order to minimize disturbance to fish.

Soils and Geology

- SOIL / GEO-1: After ground-disturbing activities are complete, all disturbed areas (outside of the active stream channel and the ditch bottom) shall be seeded with native plant species and mulched as described in the revegetation plan.

- SOIL / GEO-2: Construction of all project actions shall comply with the CVRWQCB Basin Plan Objectives and an erosion control plan. Standard Best Management Practices will be incorporated into the project designs.

Hydrology and Water Quality

- WATER-1: All construction shall be conducted in the summer / early fall during the low flow period. Any work within the channel and banks, outside of this instream work window must be isolated from flowing water and dewatering will be required.

- WATER-2: Monitoring of water turbidity and settleable materials shall be conducted in accordance with the Clean Water Act Section 401 Certification through consultation with CVRWQCB.

- WATER-3: All equipment and machinery that contains fuel, oil or other petroleum products used during construction related activities shall be checked for petroleum leaks immediately prior to being mobilized to the project site and again each day prior to use.

- WATER-4: All equipment refueling and / or maintenance shall take place within a secondary containment structure.

- WATER-5: An emergency spill kit and absorbent oil booms will be onsite during construction activities.

- WATER-6: Measures SOIL / GEO-1 and SOIL / GEO-2 regarding erosion control will be fully implemented.

- WATER-7: A designated concrete washout area will be located at least 100 feet from any high water mark within adjacent waterways and will be developed and used following the U.S. EPA Stormwater Best Management Practice for a Concrete Washout.

- WATER-8: Depending on dewatering methods, the contractor may be required to obtain a dewatering permit from CVRWQCB.

- WATER-9: All equipment operations within the channel and banks of Mill Creek will be required to use readily biodegradable hydraulic oil.

- WATER-10: If disturbance to the site is over one acre, a Stormwater Pollution Prevention Plan (SWPPP) will be prepared by the contractor. The contractor will also file a Notice of Intent with the State Water Resources Control Board to obtain coverage under the General Construction Activity Storm Water Permit prior to the first phase of construction.

Action Area

The Action Area for the project will consist of the project boundary as depicted in Figure 2 along with several combined buffers to account for noise and turbidity (Figure 4). A buffer was added for 0.25 miles upstream and downstream of the Ward Dam site to account for noise and other human disturbance activities during construction. A 150-yard distance buffer was added along both sides of the access roads, and the project boundary to account for noise and other human disturbance activities during construction. The Action Area also includes 0.5 miles downstream of the Ward Dam site to account for increased turbidity and sediment deposition following construction related activities.

IV. AFFECTED SPECIES AND EXISTING ENVIRONMENT

Central Valley Steelhead *(Oncorhynchus mykiss)*

Legal Status

The Central Valley steelhead DPS was listed as Threatened by NMFS on May 18, 1998, (63 FR 13347) and February 6, 2006 (71 FR 834). CH was designated by NMFS on September 2, 2005 (70 FR 52488). EFH has not been designated for Central Valley steelhead.

Current and Historical Distribution

Unlike Chinook salmon, steelhead typically rear in freshwater for at least two years before migrating to the Pacific Ocean. Steelhead may spawn more than once and return to the Pacific Ocean between spawning. From 1967 to 1993, the estimated number of steelhead passing the Red Bluff Diversion Dam (RBDD) ranged from a low of 470 to a high of 19,615 (CDFG 1994, McEwan and Jackson 1996). While estimates vary, perhaps ten percent of these fish spawned in Battle Creek and approximately 28 percent were believed to have spawned at the Coleman National Fish Hatchery (USFWS 1984). Steelhead are generally distributed from southern California to the Aleutian Islands. In the Central Valley, naturally

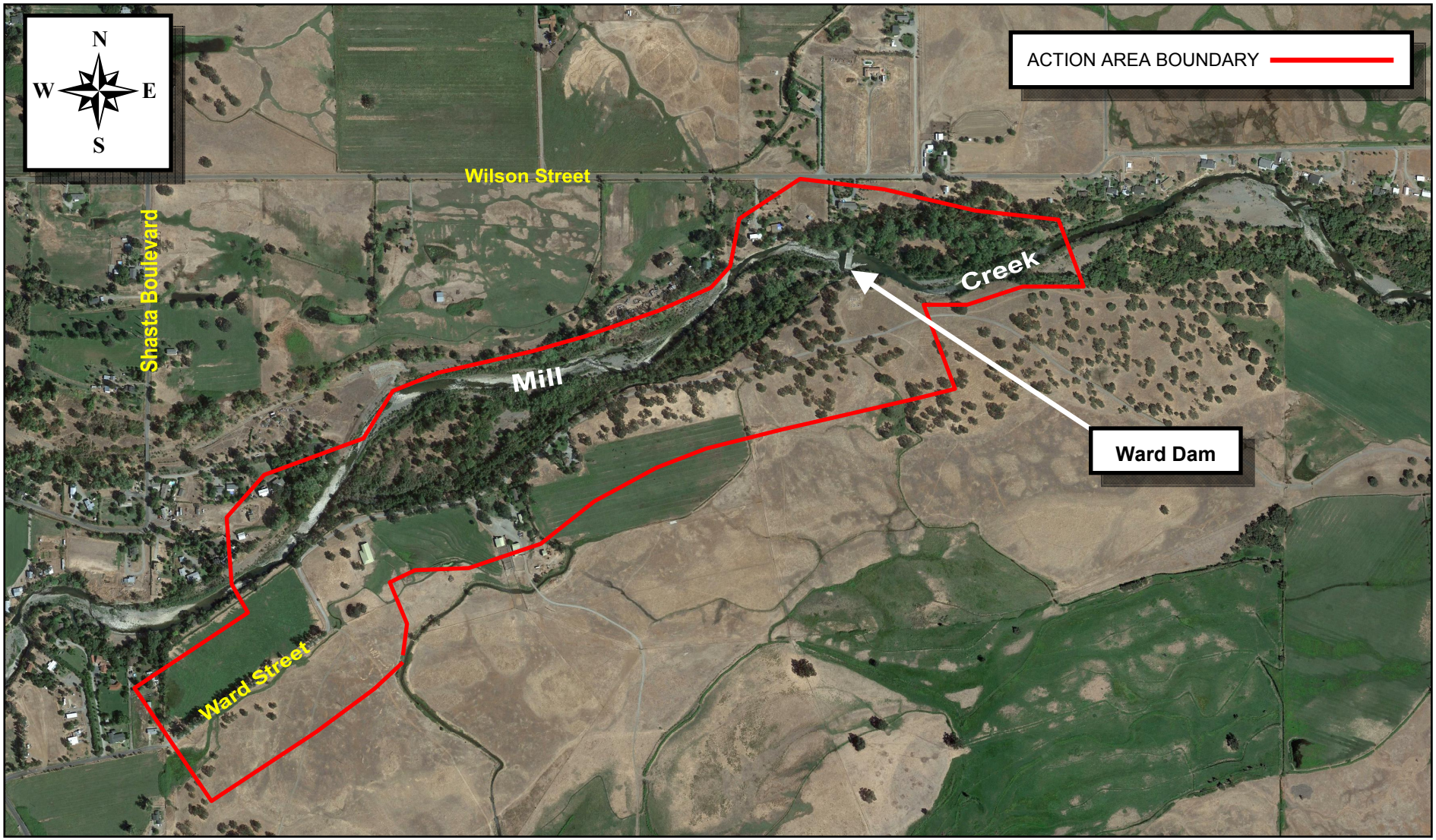

Photo Source: Google Earth, August 2013

Approximate Scale: 1 inch = 850 feet

850 feet

TEHAMA
ENVIRONMENTAL SOLUTIONS, INC.
910 Main Street, Suite D, Red Bluff, CA 96080
(530) 528-8272

Biological Assessment

Mill Creek Fish Passage Restoration Project
Ward Dam

Tehama County, California

FIGURE 4
Action Area Map

February 2015

producing populations only occur in the Sacramento River and its tributaries. More than 90 percent of the adult steelhead in the Central Valley are produced in hatcheries (Reynolds et al. 1990).

Life History and Habitat Requirements

Steelhead are generally classified into two runs, depending on whether they begin their upstream migration in winter or summer. Winter steelhead typically begin their spawning migration in fall and winter, and spawn within a few weeks to a few months from the time they enter freshwater. Summer steelhead typically enter freshwater in spring and early summer, hold over in deep pools until mature, and spawn in late fall and winter. Steelhead stocks in the Central Valley are considered winter-run steelhead (McEwan and Jackson 1996). Central Valley steelhead adult migration occurs from July through February. In most years in streams with cool, year-round, well-oxygenated water, spawning occurs from December through April and, possibly in May. Incubation generally occurs from December through April. Following emergence, fry live in small schools in shallow water along streambanks. As the steelhead grow, they establish individual feeding territories. Juvenile steelhead typically rear for one to two years in streams before emigration, which generally occurs in spring. Steelhead may remain in the ocean from one to four years, growing rapidly as they feed in the highly productive currents along the continental shelf (Barnhart 1986). Steelhead return to natal streams to spawn as two- to four-year-old adults.

Reasons for Species Decline

Population declines are attributed to blockage from upstream habitats, entrainment from unscreened diversions, hatchery practices, and degraded habitat conditions due to water development and land use practices. Dams at low elevations on all major tributaries block access to an estimated 95 percent of historical spawning habitat in the Central Valley (Reynolds et al. 1993).

Recovery Plan Goals

The recovery plan that includes both Central Valley steelhead and Central Valley spring-run Chinook salmon (NMFS 2014) identifies recovery goals for the Mill Creek Watershed / Population which includes the project area. The watershed is characterized in the recovery plan as having a high potential to support a viable population of Central Valley steelhead (NMFS 2014). Recovery efforts are focused on addressing several key stressors including elevated water temperatures affecting adult migration and holding, low flows affecting attraction and migratory cues of immigrating adults, possible catastrophic events (e.g., fire or volcanic activity).

Current Status in the Action Area

A substantial amount of fisheries data from Mill Creek have been collected since the early 1950's. Steelhead begin migration into Mill Creek during the late-fall and winter, when flows are high enough to promote passage. This was observed as early as September and as late as June in a study reviewing data from 1953 - 1964 (Van Woert 1964). During those ten years, two distinct migration peaks of steelhead appear to occur, the first from late-October to mid-November (30 percent of the run), followed by a smaller peak in the first two weeks of February (accounting for 11 percent of the run). More recent observations indicate that adult steelhead ascend Mill Creek from October through April with peak migration periods characterized by fall entry (October – early December) and winter entry (late December - February) (CDFW 2013). A smaller, less organized migration occurs in the spring, with fish migrating from April into early May during high water years (CDFW 2013).

Steelhead are believed to spawn above the project site, as the historic and current distribution of steelhead in Mill Creek is thought to coincide with the range of spring-run Chinook salmon which have been observed holding and spawning from Little Mill Creek (approximately 12 miles upstream of the Ward Dam) to approximately 0.5 miles downstream of the LVNP boundary (USFS 1999).

Rotary screw trap data collected between 1996 and 2010 by CDFW provides a definitive record of out-migration timing for steelhead for Mill Creek (CDFW 2013). Based on the rotary screw trap data, the out-migration of juvenile steelhead begins in October and extends into June on Mill Creek, with a peak outmigration in April and May and a lesser, secondary peak in November.

Central Valley Spring-Run Chinook Salmon *(Oncorhynchus tshawytscha)*

Legal Status

The Central Valley spring-run Chinook salmon ESU was listed as threatened by NMFS under the ESA on September 16, 1999 (64 FR 50394). CH was designated by NMFS on September 2, 2005 (70 FR 52488). EFH was designated by NMFS for Pacific salmon, which includes this ESU, on June 28, 2005 (70 FR 37160).

Current and Historical Distribution

Historically, the Central Valley spring-run Chinook salmon was one of the most abundant and widely-distributed salmon races. The Central Valley drainage as a whole has supported spring-run Chinook salmon runs as large as 600,000 fish between the late 1880's and the 1940's (CDFG 1998). This race once migrated into headwaters of tributaries to the Sacramento and San Joaquin Rivers. They now only exist in the main stem and a few tributaries to the Sacramento River. Gold mining and agricultural diversions caused the first major declines in spring-run Chinook populations (Moyle et al. 1995). Further extirpations followed construction of major water storage and flood control reservoirs on the Sacramento and San Joaquin Rivers and their major tributaries in the 1940's and 1950's (Moyle et al. 1995). Spring-run Chinook salmon have been completely extirpated in the San Joaquin River drainage.

Life History and Habitat Requirements

Central Valley spring-run Chinook salmon adult migration occurs in the Sacramento River from late March to July. Spring-run Chinook salmon migrate upstream in the spring and over-summer in cold-water habitats and then spawn from August to October, with peak spawning occurring in September. Incubation occurs from mid-August to mid-March with rearing and emigration occurring from mid-August through April. Chinook salmon require cold, freshwater streams with suitable gravel for reproduction. Females deposit their eggs in nests in gravel-bottom areas of relatively swift water. For maximum survival of incubating eggs and larvae, water temperatures must be between 39°F and 57°F. After emerging, Chinook salmon fry tend to seek shallow, near shore habitat with slow water velocities and move to progressively deeper, faster water as they grow. Spring-run juveniles frequently reside in freshwater habitat for 12 to 16 months, but many young migrate to the ocean during the spring within five to eight months after hatching. The Bay and Delta are important rearing areas for these migrants. Chinook salmon spend two to four years maturing in the ocean before returning to their natal streams to spawn. All adult salmon die after spawning. Suitable water temperatures for adult spring-run Chinook salmon migrating upstream to spawning grounds reportedly range from 57°F to 67°F (NMFS 1997b). However, spring-run Chinook salmon are immature when upstream migration begins and need to hold in suitable habitat for several months prior to spawning. The maximum suitable water temperature for holding is reported to be approximately 59°F to 60°F (NMFS 1997b).

Reasons for Species Decline

Factors related to the decline of spring-run Chinook salmon populations include gold mining and agricultural diversions (Moyle et al. 1995), loss of habitat in upper elevation headwaters blocked by dams, degradation of habitat conditions (e.g., water temperature), entrainment in water diversions, and over-harvest. The human-caused factor that has had the greatest effect on the abundance of spring-run Chinook salmon runs is loss of habitat, primarily in the rivers upstream of the Delta. Major dams have blocked upstream access to most spring-run Chinook salmon habitat in Central Valley rivers and streams, and smaller dams contribute to migration delay. On most Central Valley streams, spring-run Chinook

salmon are restricted to habitats with marginal water temperature conditions and limited deep holding areas. Water diversions and reservoir operations affect stream flow, which influences the quantity, quality, and distribution of Chinook salmon spawning and rearing habitat. Water diversions also reduce survival of emigrating juvenile salmonids through direct entrainment losses in unscreened or inadequately screened diversions. Predation on emigrating salmonids at diversion dams, such as RBDD, may also be an important survival factor (U.S. Bureau of Reclamation 1983).

Recovery Plan and Recovery Requirements

The recovery plan that includes both Central Valley steelhead and Central Valley spring-run Chinook salmon (NMFS 2014) identifies recovery goals for the Mill Creek Watershed / Population which includes the project area. Recovery efforts are focused on addressing several key stressors including elevated water temperatures affecting adult migration and holding, low flows affecting attraction and migratory cues of migrating adults, and possible catastrophic events (e.g. fire or volcanic activity). Recovery actions identified in the recovery plan are few and localized, but are recognized as having a high likelihood of restoring or maintaining good fish passage conditions. These actions include a comprehensive hydraulic fish passage evaluation and monitoring plan for a water exchange agreement already in place between CDFW and water users on Mill Creek (to assess the effectiveness of the agreement), long-term verification of the flows and an evaluation of existing dams for fish passage suitability, to ensure passage is provided at a wide range of stream flows and water year types (NMFS 2014).

Current Status in Action Area

Spring-run Chinook salmon utilize Mill Creek for holding, spawning, and rearing. Counts of spring-run monitored by CDFW between 1953 and 1964 at the Clough Dam (previously located approximately 1.5 miles upstream of the Ward Dam) provide information on migration timing for Mill Creek. Spring-run Chinook salmon were documented migrating upstream on Mill Creek from February through September, with 94 percent of the population migrating between mid-April and the end of June (USFS 1999). The months of May and June represented 85 percent of the migrating adults counted and the peak migration (33 percent of the total number of adults counted) occurred from around the last week in May into the first week of June. More recent data suggest that adult spring-run Chinook have a peak migration occurring in April and May (CDFW 2013).

Upon reaching their chosen tributary, Central Valley spring-run Chinook quickly pass through the valley floor reach of the creeks or rivers, to gain access to headwater reaches where water temperatures are cool enough to allow the adult fish to over-summer until spawning commences in late-August through October (CDFW 2013). High water temperatures prevent summer rearing of juvenile Chinook salmon in the reach near Ward Dam (NHC 2015). The known range of the habitat that Central Valley spring run Chinook use to hold and spawn in, extends from near the Little Mill Creek confluence (River Mile 15) upstream to within 0.5 miles of the LVNP boundary, a distance of approximately 48 miles (USFS 1999) and from 366-1585 meters (1,200 – 5,200 feet) in elevation (CDFW 2013). The area farthest downstream in Mill Creek, where spring-run Chinook begin spawning (the Little Mill Creek confluence) is approximately 12 miles upstream of the Action Area.

The Deer and Mill Creek rotary screw trap data set shows that "yearling" spring-run Chinook juveniles (individuals that have spent at least one summer in freshwater, typically in the upper watershed, before exiting the tributary in fall through spring of the following year) out-migrate in greatest numbers from October through December and continue at lesser rates through the winter and spring. The variation in elevation has significant effect on egg incubation timing in the watershed. As a result, depending upon the elevation at which an adult female spawned, spring-run Chinook fry from a given brood year may emerge over a six month period, from November through the following May.

Western Yellow-Billed Cuckoo (*Coccyzus americanus occidentalis*)

Legal Status

The western DPS of the yellow-billed cuckoo was federally-listed as Threatened by the USFWS on November 3, 2014 (79 FR 59992). CH for this species was proposed on August 15, 2014 and was in the public comment period until January 12, 2015 (79 FR 48547).

Current and Historical Distribution

Historically, this species was commonly breeding in riparian habitat throughout much of lowland California including the Central Valley (Layman 1998). Grinnell and Miller (1944) described the range as the coastal valleys from the Mexican border to Sebastopol, Sonoma County, and the Central Valley from Bakersfield and Weldon, Kern County, north to Redding, Shasta County. Small populations were also found along the Shasta River, Siskiyou County; Surprise Valley, Modoc County and in the Owens Valley and along the Colorado and Mojave Rivers. By 1944, cuckoos were no longer present in extensive areas where they were once found. The western yellow-billed cuckoo currently has a smaller range as it breeds in scattered locations where suitable habitat is available throughout California, Idaho, Utah, Arizona, New Mexico, extreme western Texas, and possibly Nevada and western Colorado (Gaines and Laymon 1984). The only localities in California that sustain breeding populations of western yellow-billed cuckoos are the Sacramento Valley and the South Fork of the Kern River.

Life History and Habitat Requirements

Western yellow-billed cuckoos breed in broad, well-developed, low-elevation riparian woodlands comprised primarily of mature cottonwoods, willows and blackberry. Breeding season generally begins with pair formation in mid-June and lasts until mid-August. Cuckoos generally arrive in California during June (Gaines and Laymon 1984) and begin nesting shortly thereafter. The species begins its fall migration in early August and most have left California by mid-September (Gaines and Laymon 1984). Western yellow-billed cuckoos are primarily foliage-gleaning insectivores, but also hover, hawk and even hop on the ground to obtain their prey. In California, their diet includes green caterpillars (predominantly sphinx moth larvae), chorus frogs, katydids and grasshoppers. The cuckoos in California are confined during the breeding season to cottonwood-willow riparian habitat with high humidity and a habitat site that is at least 325 feet-wide and at least 15 hectares (38 acres) in extent (Laymon 1998).

Reasons for Species Decline

Riparian breeding habitat loss is the primary threat to the western yellow-billed cuckoo in California. Riparian habitat loss has resulted from several activities, including agricultural development, flood control projects, reservoir construction, groundwater reduction, urban and suburban development, invasion by non-native vegetation and long-term intensive year-round cattle grazing. Important temporary losses of riparian habitat also result from wildfires and trees being cut for firewood.

Recovery Plan Goals

A recovery plan has not been prepared and recovery goals and requirements have not been identified for this species.

Current Status in the Project Area

The western yellow-billed cuckoo is not known to occur within the Action Area and was not observed during site surveys, although protocol level surveys were not conducted. This species is known to nest along the Sacramento River (approximately three miles from the project site) within the USGS Los Molinos quadrangle.

V. EFFECTS ANALYSIS

Central Valley Steelhead

Direct Effects

Phase 1 baseline conditions expected at the project site will entail full diversion of Mill Creek flows through the diversion canal during this phase of the mid-summer instream construction work. Full diversion baseline conditions will result in Mill Creek becoming almost completely dewatered, aside from seepage under the dam. During normal years, these are the baseline conditions during this time of year. Mill Creek water temperatures downstream of the dam are expected to be at lethal levels for fish during this time. No migration would therefore be expected to be occurring during the baseline conditions of the two-month Phase 1 construction period. It is possible that there may be direct impacts to juveniles emigrating from upstream of dam during construction.

No water diversions will be expected to be conveyed through the diversion canal, at the time proposed for the Phase 2, early-fall instream portion of the project (estimated to begin mid-October). The start of Phase 2 construction will be scheduled to coincide with the end of the diversion season, to ensure that all Mill Creek flows are sent down the fish ladder and / or dam depending on flow conditions. This will provide dry diversion canal conditions. During the post-diversion Phase 2 construction phase, the majority of the construction work will be out of the stream, however a small localized area may be required to be de-watered on the south side of the creek. The majority of Mill Creek will remain unimpeded, allowing for fish to migrate upstream and emigrate downstream through the project site unhindered.

Identified potential direct effects to adult or juvenile Central Valley steelhead during Phase 2, above baseline conditions would include construction activities related to the final tasks for reconstruction of the new fish ladder, retrofitting of the fish screen and components (canal and bypass pipe) and the installation of water diversion control infrastructure improvements and include effects due to:

- delays in migration, emigration or avoidance of habitat due to project activities,
- construction activities, and
- fish rescue operations.

During Phase 2 construction (approximately mid-October) adults may be migrating through the project area, but would not be expected to be spawning in the area. Emigrating juveniles are also expected to potentially be in project area. Fish that may potentially be migrating or emigrating through the project reach in above baseline conditions, could be impacted by delays caused by noise and visual disturbance, during the one month instream construction portion, of the two-month total Phase 2 construction period. Any potential delays would be short term due to the fact that construction would only occur for eight to ten hours per day, which would allow fish to migrate and emigrate during daily non-construction periods. Juvenile fish that may be emigrating in the project area, given the time of year, will be larger and more apt and able, to avoid the area, given their mobility.

During rewatering, a plume of turbidity is anticipated immediately following construction activities as the channel immediately begins to adjust to the new conditions. This turbidity and small amount of suspended sediment will likely persist in the water column for several hours until channel conditions stabilize; however, rewatering activities will occur slowly, in order to prevent and minimize turbid conditions in Mill Creek. Turbidity and settleable matter are not expected to exceed the likely conditions in the Clean Water Act Section 401 Certification issued by the CVRWQCB. If juvenile steelhead are present in the immediate area of construction, it is believed that the number of fish affected will be few

and most will volitionally leave the Action Area until activities cease or turbidity diminishes. Juvenile fish should be able to escape to available refugia near the area, a non-lethal behavioral response. Because the work will occur downstream of the known spawning areas, no steelhead redds are expected to be affected.

A fish exclusion zone upstream and downstream of the construction areas, as needed, will be implemented prior to the onset of any instream construction activities. The actions necessary to remove fish out of the construction area are expected to result in some form of fish capture and handling. A permitted crew will be responsible for the seining, dip-netting, and / or electroshocking. Actions will be taken first to encourage fish to volitionally move out of the area prior to implementing other methods. If electrofishing is required, NMFS electrofishing guidelines (NMFS 2000) will be used. Any capture and handling associated with electrofishing is likely to result in direct effects to juvenile steelhead rearing in the fish exclusion zone. It is expected that capture, handling and release of the juvenile steelhead will disrupt normal behavior and cause temporary stress, injury, and occasional mortality. It is anticipated that fish capture / relocation will not last more than one to two days; however, additional capture / relocation will occur over several additional days if additional fish are observed within the exclusion zone as a result of daily monitoring. The fish exclusion zone will be maintained until the construction is completed and instream turbidity has dissipated.

In creating a fish exclusion zone, a crew will herd any fish present out of the work area, and block nets will be set to keep fish out of the work area. To remove remaining juvenile fish, snorkeling, dip-netting, and electroshocking will be used. All captured fish will be held in buckets filled with stream water for a period only long enough to transport them to an appropriate release site upstream or downstream of the project site. It is expected that, although NMFS electroshocking guidelines will be used, direct effects to individual fish will occur.

Indirect Effects

During the initial time period following construction and the initial winter, a small amount of sediment that will be disturbed by project construction activities will likely be redistributed by high flows. Because the anticipated amount of sediment is very small, and mobilization will occur slowly, post-construction and during high flows of the initial winter (when background turbidity and sediment transport is relatively high), only minimal affects to adult or juvenile steelhead are anticipated.

As a result of the relocation of the diversion intake structure and head gate and the removal and replacement of the fish ladder, reconstruction of the diversion canal and relocation of the bypass pipe, some of the wetland riparian habitat that has become established along the stream bank will likely be temporarily disturbed. It is estimated that approximately 0.10 acres of riparian wetland identified in a preliminary wetland delineation (Appendix D) conducted for the project (TES 2015b) may be temporarily disturbed as a result of the construction related project activities. This will result in a temporary reduction of shaded aquatic habitat. To minimize this effect, riparian vegetation will be replanted as detailed in the Resource Protection Measures outlined earlier in this document and the revegetation plan to be prepared for this project.

Effects on Critical Habitat

The stream reach in which the project is located is within the designated CH for Central Valley steelhead. While there will be some slight changes to the habitat at the Ward Dam as a result of the construction, no net loss of CH is expected as a result of project implementation. Turbidity generated by construction activities can have an effect on the CH elements that address water quality; however, because 1) the impact is considered very small in quantity; and 2) the project will improve passage conditions for fish; the impact to this element is considered very minimal.

Central Valley Spring-Run Chinook Salmon

Direct Effects
The direct effects to Central Valley spring-run Chinook are expected to be similar to the direct effects listed for Central Valley Steelhead, with the exception that there will be less of an impact to Central Valley spring-run Chinook due to the fact that adult fish are not expected to be present during Phase 2 construction work.

Indirect Effects
Indirect effects for Central Valley spring-run salmon are expected to be similar to the indirect effects described above for Central Valley steelhead.

Effects on Critical Habitat
The effects are expected to be similar to the effects described under the "Effects on Critical Habitat" section for Central Valley steelhead above.

Effects on Essential Fish Habitat
No net loss of EFH is expected as a result of project implementation. The effects are expected to be similar to the effects described under the "Effects on Critical Habitat" section for Central Valley steelhead above.

Western Yellow-Billed Cuckoo

Direct Effects
There is no nesting habitat within the project site for the western yellow-billed cuckoo, due to a lack of nesting habitat that meets the species' minimum size requirements. The riparian habitat within the project area is not 325 feet wide or 38 acres in size, which is a breeding requirement for this species. While this species has not been observed and is not known to occur in the project area or vicinity, foraging habitat is present within the riparian areas in the vicinity of the site. If the western yellow-billed cuckoo were nesting downstream on the Sacramento River, the project area could serve as a potential foraging area for this species. If foraging was occurring within the project site, construction activities could disrupt foraging activities.

Identified potential direct effects to western yellow-billed cuckoo during construction activities include effects due to:

- avoidance of foraging habitat due to project activities

Individuals foraging in the project area will be apt and able to avoid the area and potential impacts, given their mobility. The construction work will be temporary in nature, only consisting of one season of work. There is also a low likelihood that western yellow-billed cuckoo would be present in the Action Area during most of the construction period, due to the fact that this species departs to South America by late-August or early-September (Hughes 1999). Effects to the western yellow-billed cuckoo may occur, but are expected to be minimal in nature.

Indirect Effects
There are no indirect effects expected as a result of this project.

Effects on Critical Habitat
The project site is outside of the currently proposed CH for this species, therefore there will be no impacts to this element.

Pacific Salmon EFH

Direct Effects

The proposed project is within the EFH of "Pacific Salmon". Therefore, potential effects to EFH for fall-/late fall-run Chinook salmon is assessed. No net loss of EFH is expected as a result of project implementation. Direct effects for the EFH of Pacific Salmon are expected to be similar to the direct effects described above for steelhead CH.

Indirect Effects

Indirect effects for EFH of Pacific Salmon are expected to be similar to the indirect effects described above for steelhead.

Interdependent and Interrelated Effects

Interdependent and interrelated factors are those project components that would likely not occur otherwise, if it were not for the project (such as project-related monitoring) or have some connection to the project area that should be considered and / or could have an indirect effect on species in the Action Area.

Project revegetation and monitoring will occur after the project site construction related activities are completed. Revegetation will occur in the fall of 2015 using a work crew of three to four people. Work will occur on sand and gravel bars and along any disturbed creek banks and will involve only minimal wading in water. Personnel will be trained to avoid any impacts to salmonid redds.

There are no other interrelated or interdependent actions associated with the proposed action. Maintenance of the diversion structures are expected to continue, but will be minor in impact. Agricultural actions associated with the LMMWC water delivery are expected to continue and are not anticipated to change in delivery amounts, methods or timing.

Cumulative Effects

Cumulative effects are those effects of future non-federal (State, local government, or private) activities on endangered and threatened species or CH that are reasonably certain to occur within the Action Area of the federal activity subject to consultation.

There are several watershed restoration projects and Resource Protection Measures that have been implemented by the Mill Creek Conservancy, LMMWC, CDFW and / or the USFWS over the past approximately 20 years. These projects include but are not limited to, development of a water exchange program, fish passage restoration, development of conservation easements, riparian habitat restoration, outdoor education, pasture restoration, agricultural and timber preservation zoning, streambank stabilization, non-native vegetation control and fuels management.

There is an exposed siphon downstream of the Ward Dam which is another upcoming potential fish passage project; however, it is currently unfunded. Additionally, another diversion dam, the Upper Dam, is scheduled for fish passage improvements by USFWS, similar in scope to this project, in 2016.

The cumulative impacts of these projects and the Mill Creek Fish Passage Restoration Project – Ward Dam are not anticipated to be negative, and in fact should improve natural resource conditions for native species in the Mill Creek watershed.

Beneficial Effects

Mill Creek, as well as Deer and Antelope Creek, have the greatest potential for restoring wild steelhead populations in the entire Central Valley system (McEwan and Jackson 1996). The project is being implemented to improve fish passage for anadromous fish including Central Valley steelhead, Central Valley fall- / late-fall run Chinook salmon and Central Valley spring-run Chinook salmon, as well as other native species. The Ward Dam fish ladder, as currently operated, is a partial upstream barrier to adult and / or juvenile Chinook salmon and steelhead, during certain flows. The project will allow anadromous fish to have improved year-round upstream and downstream passage, preventing potential delayed migration, which could improve populations in Mill Creek. The project will allow for a decrease in potential stress, injury and mortality associated with the blockage of upstream migration during high flow events. The installation of upgraded diversion screen and bypass pipe will eliminate the risk of entrainment of fish into the diversions. The installation of the rock scour apron will prevent further incision from scour during high flow events and potential dam / fish ladder failure, which could result in the release of sediments from behind the dam, which could impair water quality and instream habitat for these anadromous species. The new weir gates should reduce fish injury relative to the existing undersized headgates. Relocation of the intake gates will prevent sediments from accumulating in front of the existing diversion intake gate during winter flows and then flushing into the diversion canal when the gates are opened. These sediment deposits accumulate in front of, and behind the fish screen. Improved conditions at the headgate will benefit anadromous fish by increasing overall diversion canal flows and overall operational capabilities of the fish screen due to these increased flows through the screen. Flows through the fish screen will also be improved by the installation of louvers to balance the flows across the screen. The rebuilding of the diversion canal will also ensure that CDFW and NMFS fish screen flow criteria are met. The diversion canal modifications will also decrease the amount of debris that washes over the canal wall during flood events which then accumulates at the inlet of the bypass return pipe and in front of the fish screen. Flows through the bypass pipe will be improved from this reduction of debris. Fish will return to the stream more efficiently with the new bypass pipe configuration and there will likely be less predation on these fish with the new bypass pipe outlet location. In total, project environmental impacts will be small relative to the expected environmental benefits. Project environmental impacts will be short-term relative to the expected recurring annual environmental benefits.

VI. ESA EFFECT DETERMINATION

The following conclusions led to the final determination of effects that the Mill Creek Fish Passage Restoration Project – Ward Dam would have on Endangered, Threatened and Proposed species:

1) Resource Protection Measures and Best Management Practices will be implemented.

2) Central Valley spring-run Chinook salmon adults are not expected to occur within the Action Area during construction.

3) Central Valley steelhead and Central Valley spring-run Chinook salmon adults are not expected to spawn within the Action Area during construction.

4) The Western yellow-billed cuckoo is not expected to nest within the Action Area.

5) Beneficial effects will be realized from the construction of the new fish ladder and associated infrastructure. Fish passage will be improved for all life stages of salmonids and other native fish species,

which over the long-term will mediate any negative impacts of project implementation (direct and indirect take).

The proposed project **may affect and is likely to adversely affect** Central Valley steelhead and Central Valley spring-run Chinook salmon, based upon the potential for presence in the project area during implementation. Harm is likely to occur from the fish exclusion process, exposure to elevated turbidity and suspended sediment during the rewatering portion of the project work and harassment of juvenile and adult fish during construction activities. Mortality may occur from the fish exclusion process. The harm and mortality is not expected to affect recovery of Central Valley steelhead and Central Valley spring-run Chinook salmon. Negative impacts generated by the project are small compared to the potential net increase in production, due to improved upstream access to spawning and rearing habitat and the decrease in potential stress, injury and mortality due to improved downstream emigration. The short-term negative effects will be outweighed by the long-term beneficial effects.

The proposed project **may affect, but is not likely to adversely modify** Central Valley steelhead and Central Valley spring-run Chinook salmon CH.

The proposed project **may affect and is not likely to adversely affect** western yellow-billed cuckoo based on the fact that there is a low likelihood that western yellow-billed cuckoo would be nesting in the Action Area, due to a lack of nesting habitat that meets the minimum size requirements within the Action Area. If foraging was occurring within the project site, project and construction activities could disrupt foraging activities. Effects to the western yellow-billed cuckoo are expected to be minimal. Individuals foraging in the project area, will be apt and able to avoid the area and potential impacts, given their mobility. The construction work will be temporary in nature, only consisting of one season of work. There is also a low likelihood that western yellow-billed cuckoo would be present in the Action Area during most of the construction period, due to the fact that this species departs to South America by late-August or early-September (Hughes 1999). Effects to the western yellow-billed cuckoo may occur, but are expected to be minimal in nature.

The proposed project **is not likely to eliminate or significantly diminish or disrupt** Essential Fish Habitat for Pacific Salmon.

The proposed project **will have no effect** on green sturgeon, Conservancy fairy shrimp, vernal pool fairy shrimp, Hoover's spurge, valley longhorn elderberry beetle, Delta smelt, vernal pool tadpole shrimp, Sacramento River winter-run Chinook salmon, hairy orcutt grass, slender orcutt grass, California red-legged frog, giant garter snake, Greene's tuctoria or least Bell's vireo.

VII. REFERENCES

Barnhart, R.A. 1986. *Species Profiles: Life Histories and Environmental Requirements of Coastal Fishes and Invertebrates (Pacific Southwest) - Steelhead.* (Biological Report 82[11.60], TR EL-82-4.) Prepared for U.S. Fish and Wildlife Service, Washington, D.C, and the U.S. Army Corps of Engineers, Vicksburg, Mississippi.

Bates, K. 1991. *Pool-and-Chute Fishways*. American Fisheries Society Symposium 10: 268-277.

California Department of Fish and Game. 1994. *Central Valley Anadromous Sport Fish Annual Run-size, Harvest, and Population Estimates, 1967 through 1991.* Sacramento, California.

California Department of Fish and Game. 1998. *Report to the Fish and Game Commission: A Status Review of the Spring-run Chinook Salmon (Oncorhynchus tshawytscha) in the Sacramento River Drainage.* Candidate Species Status Report 98-01.

California Department of Fish and Wildlife. 2013. *Juvenile Salmonid Monitoring Using Rotary Screw Traps in Deer Creek and Mill Creek, Tehama County, California.* Summary Report: 1994 – 2010 RBFO Technical Report No. 04-2012.

Dittes and Guardino Consulting. 2014. *Survey for Special-status Vascular Plant Species for the Proposed Mill Creek Fish Passage Restoration Project Mill Creek: Tehama County, California.* Prepared for Tehama Environmental Solutions, Inc., Red Bluff, California.

Flosi, G., S. Downie, J. Hopelain, M. Bird, R. Coey and B. Collins. 2010. *California Salmonid Stream Habitat Restoration Manual (4th Edition).* California Department of Fish and Game, Wildlife and Fisheries Division.

Gaines, D.A. and S.A. Laymon. 1984. *Decline, Status and Preservation of the Yellow-billed Cuckoo in California.* Western Birds 15:49-80.

Grinnell, J. and A.H. Miller. 1944. *The distribution of the birds of California*. Pacific Coast Avifauna 27:1-608.

Halterman, M.D. 1991. *Distribution and Habitat use of the Yellow-billed Cuckoo (Coccyzus americanus occidentalis) on the Sacramento River, California, 1987 - 1990.* M.S. Thesis, California State California State University, Chico, California.

Hughes, J.M. 1999. *Yellow-billed Cuckoo (Coccyzus americanus).* In The Birds of North America, No. 148 (A. Poole and F. Gill, eds.). The Birds of North America, Inc., Philadelphia, PA.

Laymon, S. A. 1998. *Yellow-billed Cuckoo (Coccycus americanus).* In The Riparian Bird Conservation Plan: A strategy for reversing the decline of riparian-associated birds in California. California Partners in Flight. http://www.prbo.org/calpif/htmldocs/riparian_v-2.html

Laymon, S.A. P.L. Williams, and M.D. Halterman. 1997. *Breeding Status of the Yellow-billed Cuckoo in the South Fork Kern River Valley, Kern County, California: Summary Report 1985-1996.* Admin. Rept. USDA Forest Service, Cannell Meadow Ranger District, Sequoia National Forest.

Laymon, S.A., and M.D. Halterman. 1985. *Yellow-billed Cuckoos in the Kern River Valley: 1985 Population, Habitat Use, and Management Recommendations.* Report to the Nature Conservancy. Sacramento, California.

Laymon, S.A., and M.D. Halterman. 1989. *A Proposed Habitat Management Plan for Yellow-billed Cuckoos in California.* USDA Forest Service Gen. Tech. Rep. PSW-110. pp 272-277.

Maslin, P., J. Kindopp, M. Lennox, and C. Storm. 1999. *Intermittent Streams as Rearing Habitat for Sacramento River Chinook Salmon (Oncorhynchus tshawytscha): 1999 Update.* California State University, Chico. Dated December 23 1999.

McEwan, D. and T.A. Jackson. 1996. *Steelhead Restoration and Management Plan for California.* California Department of Fish and Game, Inland Fisheries Division, Sacramento, California.

Moyle, P.B., R.M. Yoshiyama, J.E. Williams and E.D. Wikramanayake. 1995. *Fish Species of Special Concern in California.* Prepared for the California Department of Fish and Game, Inland Fisheries Division, Sacramento, California.

National Marine Fisheries Service. 1997a. *Fish Screen Criteria for Anadromous Salmonids.* Dated January 1997. http://swr.nmfs.noaa.gov/hcd/fishscrn.pdf.

National Marine Fisheries Service. 1997b. Documents submitted to the ESA Administrative Record for west coast Chinook salmon by M. Dahlberg, 12 February 1997, *as cited in* Myers, J.M., R.G. Kope, G.J. Bryant, D. Teel, L.J. Lierheimer, T.C. Wainwright, W.S. Grand, F.W. Waknitz, K. Neely, S.T. Lindley, and R.S. Waples. 1998. *Status Review of Chinook Salmon from Washington, Idaho, Oregon, and California*. National Oceanic and Atmospheric Administration Technical Memo. NMFS-NWFSC-35.

National Marine Fisheries Service. 2000. G*uidelines for Electrofishing Waters Containing Salmonids Listed Under the Endangered Species Act June 2000.* Protected Resource Division.

National Marine Fisheries Service, Northwest Region. 2011. *Anadromous Salmonid Passage Facility Design.*

National Marine Fisheries Service. 2014. *Recovery Plan for the Evolutionarily Significant Units of Sacramento River Winter-Run Chinook Salmon and Central Valley Spring-Run Chinook Salmon and the Distinct Population Segment of Central Valley Steelhead*. Southwest Regional Office, Sacramento, California.

Northwest Hydraulic Consultants (NHC). 2011. *Mill Creek Fish Passage, Phase 1: Pre-design Report*. Prepared for US Fish and Wildlife Service. December 30, 2012.

Northwest Hydraulic Consultants. 2013. *Mill Creek Fish Passage Assessment and Restoration Project, Phase 1 Alternatives Analysis Report.* Prepared for the U.S. Fish and Wildlife Service, Red Bluff Fish and Wildlife Office, Red Bluff, California.

Northwest Hydraulic Consultants. 2015. *Mill Creek Fish Passage Assessment and Restoration Project, Phase 1 Ward Dam Site 95% Basis of Design and Plans.* Prepared for the U.S. Fish and Wildlife Service, Red Bluff Fish and Wildlife Office, Red Bluff, California.

Reynolds, F.L., R.L. Reavis, and J. Schuler. 1990. *Sacramento and San Joaquin River Chinook Salmon and Steelhead Restoration and Enhancement Plan.* California Department of Fish and Game, Sacramento, California.

Reynolds, F.L., T. Mills, R. Benthin, and A. Low. 1993. *Central Valley Anadromous Fisheries and Associated Riparian and Wetlands Areas Protection and Restoration Action Plan.* Draft. California Department of Fish and Game, Inland Fisheries Division, Sacramento, California.

Tehama Environmental Solutions, Inc. 2015. *Delineation of Waters of the U.S.: Mill Creek Fish Passage Restoration Project, Tehama County, California.* Prepared for Northwest Hydraulic Consultants, West Sacramento, California.

U.S. Bureau of Reclamation. 1983. *Central Valley Fish and Wildlife Management Study: Predation of Anadromous Fish in the Sacramento River, California.* Special Report. Sacramento, California.

U.S. Fish and Wildlife Service. 1984. *Evaluation Report of the Potential Impacts of the Proposed Lake Red Bluff Water and Power Project on the Fishery Resources of the Sacramento River.* Division of Ecological Services, Sacramento, California.

U.S. Fish and Wildlife Service. 2001. *Final Restoration Plan for the Anadromous Fish Restoration Program.* Prepared for the U.S. Secretary of the Interior.

U.S. Fish and Wildlife Service. 2015. Sacramento Fish and Wildlife Office Species List Website. www.fws.gov/sacramento/es_species/es_species_lists.cfm. List generated January 12, 2015.

U.S. Forest Service . 1999. *Watershed Analysis for Mill, Deer, and Antelope Creeks.* U.S. Department of Agriculture, Lassen National Forest, Almanor Ranger District, Chester, California 299 pp. [6.0 Mb]

Van Woert, W. 1964. *Mill Creek Counting Station*. Office memorandum to Eldon Hughes, May 24. Calif. Dept. Fish and Game, Water Projects Branch, Contract Services Section. 7 pp.

VIII. PERSONS CONSULTED

Ms. Patricia Bratcher, Habitat Restoration Coordinator, CDFW, Region 1, Redding, California.

Mr. Jason Hanni, Senior Biologist, Sacramento Fish and Wildlife Office, Sacramento, California.

Mr. Matt Johnson, Environmental Scientist, CDFW, Region 1, Redding, California.

Mr. Darrell Mullins, General Manager, Los Molinos Mutual Water Company, Los Molinos, California.

Ms. Brenda Olsen, Fisheries Biologist, USFWS, Red Bluff Fish and Wildlife Office, Red Bluff, California.

Ms. Patricia Parker Hamelberg, Habitat Restoration Coordinator, Red Bluff Fish and Wildlife Office, Red Bluff, California.

Mr. Ken Rood, Principal, Northwest Hydraulic Consultants, Sacramento, California.

Mr. Brian Wardman, P.E. Senior Engineer, Northwest Hydraulic Consultants, Sacramento, California.

Mr. Brent Wolfe, Principal, Northwest Hydraulic Consultants, Sacramento, California.

IX. ACKNOWLEDGEMENTS

We wish to thank Ms. Patricia Bratcher (CDFW), Mr. Matt Johnson (CDFW), Mr. Darrell Mullins (LMMWC), Ms. Patricia Parker Hamelberg (USFWS), Ms. Brenda Olsen (USFWS), Mr. Ken Rood (NHC), Mr. Brian Wardman (NHC) and Mr. Brent Wolfe (NHC) for assistance with the preparation of portions of this document. We also wish to thank the Mill Creek Ranch for providing access to the project site and the Los Molinos Mutual Water Company for arranging access to the project site.

APPENDIX A

USFWS Species List

U.S. Fish & Wildlife Service

Sacramento Fish & Wildlife Office

Federal Endangered and Threatened Species that Occur in or may be Affected by Projects in the LOS MOLINOS (610D) U.S.G.S. 7 1/2 Minute Quad

Report Date: January 12, 2015

Listed Species

Invertebrates

Branchinecta conservatio
Conservancy fairy shrimp (E)

Branchinecta lynchi
vernal pool fairy shrimp (T)

Desmocerus californicus dimorphus
valley elderberry longhorn beetle (T)

Lepidurus packardi
vernal pool tadpole shrimp (E)

Fish

Acipenser medirostris
green sturgeon (T) (NMFS)

Hypomesus transpacificus
delta smelt (T)

Oncorhynchus mykiss
Central Valley steelhead (T) (NMFS)
Critical habitat, Central Valley steelhead (X) (NMFS)

Oncorhynchus tshawytscha
Central Valley spring-run chinook salmon (T) (NMFS)
Critical Habitat, Central Valley spring-run chinook (X) (NMFS)
winter-run chinook salmon, Sacramento River (E) (NMFS)

Amphibians

Rana draytonii
California red-legged frog (T)

Reptiles

Thamnophis gigas

giant garter snake (T)

Birds

Coccyzus americanus occidentalis

Western yellow-billed cuckoo (T)

Key:

- (E) Endangered - Listed as being in danger of extinction.
- (T) Threatened - Listed as likely to become endangered within the foreseeable future.
- (P) Proposed - Officially proposed in the Federal Register for listing as endangered or threatened.
- (NMFS) Species under the Jurisdiction of the National Oceanic & Atmospheric Administration Fisheries Service. Consult with them directly about these species.
- Critical Habitat - Area essential to the conservation of a species.
- (PX) Proposed Critical Habitat - The species is already listed. Critical habitat is being proposed for it.
- (C) Candidate - Candidate to become a proposed species.
- (V) Vacated by a court order. Not currently in effect. Being reviewed by the Service.
- (X) Critical Habitat designated for this species

APPENDIX B

95% Design Plan Drawings

SHEET INDEX

COVER SHEET	T1
GENERAL NOTES	G1
ACCESS & DEMOLITION	G2
GENERAL PLAN	C1
FISH LADDER PLAN	C2
FISH LADDER DETAILS	C3
DIVERSION INLET PLAN	C4
DIVERSION INLET DETAILS	C5
JUVENILE BYPASS PIPE DETAILS	C6
FISH SCREEN RETROFIT PLAN	C7
FISH SCREEN RETROFIT DETAILS	C8

LEGEND

EXISTING TREES	
EXISTING PAVED ROAD	
EXISTING GRAVEL ROAD	
EXISTING CONTOURS (MAJOR)	60
EXISTING CONTOURS (MINOR)	61
EXISTING FENCE	
EXISTING EDGE OF WATER (00/00/00)	
EXISTING BUILDINGS & STRUCTURES	
PROPOSED EARTHWORK	
CONSTRUCTION BASELINE	1+00
CONSTRUCTION AREA LIMITS	
PROPOSED CONCRETE	
PROPOSED NATIVE/SOIL MIX FILL	
PROPOSED EXCAVATED AREA	
PROPOSED ROCK SCOUR PROTECTION	
PROPOSED VRSS	
PROPOSED METAL GRATING	

U.S. Department of Interior

Fish & Wildlife Services

CONSTRUCTION PLANS FOR

Mill Creek Fish Passage Improvement Project
Ward Dam Fish Ladder

JANUARY 2015

PROJECT MANAGER

TRICIA PARKER-HAMELBERG
ANTIDROMOUS FISH RESTORATION PROGRAM, NORTHERN SACRAMENTO RIVER
U.S. FISH & WILDLIFE SERVICE, RED BLUFF OFFICE

APPROVED BY:

LOS MOLINOS MUTUAL WATER COMPANY (date)

U.S. Fish & Wildlife Service

Red Bluff Fish & Wildlife Service
10950 Tyler Road
Red Bluff, California 96080
www.fws.gov/redbluff

nhc
northwest hydraulic consultants
3950 industrial boulevard, suite 100c
west sacramento, california 95691-6508
phone: (916) 371-7400 fax: (916) 371-7475
www.nhcweb.com

REGISTERED PROFESSIONAL ENGINEER BRIAN G. WARDMAN No. 74371 Exp: 06/30/15 CIVIL STATE OF CALIFORNIA

PRELIMINARY
NOT FOR CONSTRUCTION

BRIAN G. WARDMAN (date)
CALIFORNIA REGISTERED
PROFESSIONAL ENGINEER NO. #74371
northwest hydraulic consultants

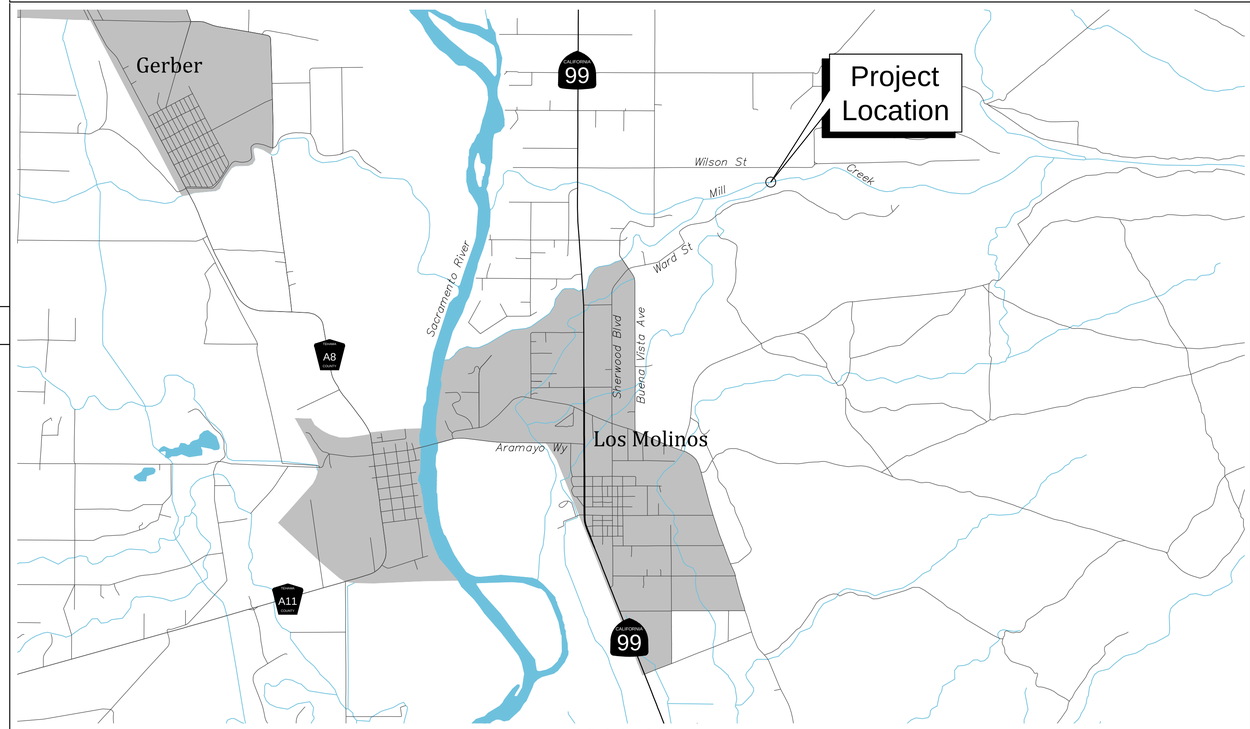

Vicinity Map

Project Location Map

Drawing Name				Date
WARD COVER P:\50655_Mill_Creek_Fish_Passage_Phase_1\AC-50655\dwg				14 January 2015 07:20
Drawing Status	Designer	Drafter	Checked	Job Number
95% Submittal	tvs	tvs	bgw	50655

Sheet 1 of 11

Sheet Number

T1

1. GENERAL

1.1. SUMMARY

1.1.1. THE US FISH AND WILDLIFE, HEREIN REFERRED TO AS THE PROJECT OWNER, WILL DESIGNATE A REPRESENTATIVE REFERRED TO HEREIN AS THE ENGINEER, TO OVERSEE THE CONSTRUCTION AND COORDINATE WITH LOS MOLINOS MUTUAL WATER COMPANY, CONTRACTOR AND PERMITTING AGENCIES.

1.1.2. THE WORK WILL BE PERFORMED AT WARD DAM SITE ON MILL CREEK IN TEHAMA COUNTY. THE WORK INCLUDES BUT IS NOT LIMITED TO: EXCAVATION; SPOILS DISPOSAL; SUB-BASE PREPARATION; STRUCTURAL FILL PLACEMENT; FORMING, PLACING, AND FINISHING PORTLAND CEMENT CONCRETE; FURNISHING AND INSTALLING SCOUR APRON; REVEGETATION; BYPASS PIPE AND SITE CLEANUP AND RESTORATION.

1.1.3. CONTRACTOR SHALL FURNISH ALL LABOR, MATERIAL, EQUIPMENT, AND INCIDENTALS TO COMPLETE ALL WORK ON THE PLANS AND DESCRIBED IN THE SPECIFICATIONS.

1.1.4. THE CONTRACTOR SHALL BE RESPONSIBLE FOR IDENTIFYING AND AVOIDING DAMAGE TO UNDERGROUND UTILITIES. THE CONTRACTOR SHALL LOCATE EXISTING UTILITIES AT LEAST 48 HOURS PRIOR TO EXCAVATION. ANY RELOCATIONS OR TEMPORARY OUTAGES SHALL BE COORDINATED WITH THE PROJECT MANAGER. IF UTILITY CONFLICTS ARE IDENTIFIED, THE CONTRACTOR SHALL HALT ALL WORK IN THE AREA AFFECTED BY THE UTILITY CONFLICT AND SHALL IMMEDIATELY NOTIFY THE PROJECT MANAGER.

1.1.5. THIS PROJECT IS SUBJECT TO REQUIREMENTS OF PERMITS ISSUED BY VARIOUS REGULATORY AGENCIES. THE CONTRACTOR IS RESPONSIBLE TO UNDERSTAND AND PERFORM ALL WORK IN ACCORDANCE WITH THE REQUIREMENTS OF THE PERMITS. COPIES OF THE PERMITS HAVE BEEN PROVIDED TO THE CONTRACTOR ALONG WITH THESE PLANS AND SPECIAL PROVISIONS. PRIOR TO COMMENCING WORK THE CONTRACTOR SHALL COORDINATE WITH THE PROJECT MANAGER TO VERIFY THE MOST RECENT COPY OF ALL APPLICABLE PERMITS ARE INCLUDED IN THE SPECIAL PROVISIONS.

1.1.6. HORIZONTAL COORDINATES AND ELEVATIONS ARE BASED ON NAD 1983 COORDINATES AND NAVD 1988 VERTICAL DATUM, RESPECTIVELY. CONTROL POINTS SET IN THE FIELD ARE SHOWN ON SHEET C1.

2. TEMPORARY STREAM DIVERSION AND DEWATERING

2.1. SUMMARY

THE CONTRACTOR SHALL FURNISH ALL LABOR, MATERIAL, EQUIPMENT, AND INCIDENTALS FOR ALL WORK REQUIRED TO PROVIDE TEMPORARY STREAM DIVERSIONS AND ANY DEWATERING ACTIVITIES NECESSARY TO PERFORM THE WORK.

2.2. SUBMITTALS

2.2.1. CONTRACTOR SHALL PROVIDE A STREAM DIVERSION AND DEWATERING PLAN THAT DESCRIBES THE MATERIALS AND METHODS TO BE USED TO INSTALL AND MAINTAIN STREAM DIVERSIONS. THE PLAN SHALL OUTLINE THE SEQUENCE OF WORK AND THE METHODS FOR DEWATERING AND REWATERING THE CREEK.

2.2.2. NO WORK SHALL OCCUR UNTIL THE PLAN IS APPROVED BY THE ENGINEER.

2.3. CONDITIONS AND REQUIREMENTS

2.3.1. THE WORK WILL BE CONSTRUCTED WHEN RIVER FLOWS ARE GENERALLY LOW. DURING CONSTRUCTION, LOS MOLINOS MUTUAL WATER COMPANY (LMMWC) CONTROLS RELEASES TO WARD DAM AT UPPER DAM. THE FLOW RELEASES ARE DIVERTED AT WARD DAM. LMMWC WILL TYPICALLY DIVERT ALL OF THE REMAINING STREAMFLOW AT WARD DAM DURING LATE SUMMER. THE CONTRACTOR WILL COORDINATE WITH LMMWC TO DETERMINE FLOWS FOR TEMPORARY DIVERSIONS AND TO MAINTAIN THE DIVERSION FLOWS AT WARD DAM. IN THE EVENT THAT THE FLOW IS FORECASTED TO RISE ABOVE THE WARD DAM DIVERSION CAPACITY DURING THE CONSTRUCTION PERIOD, THE ENGINEER MAY REQUIRE THE WORK TO BE HALTED (EXCEPT FOR THE INSTALLATION AND MAINTENANCE OF CONSTRUCTION BMPS) AND THE TEMPORARY STREAM DIVERSIONS TO BE REMOVED. IN THE EVENT THAT WORK IS RESUMED, RE-INSTALLATION OF TEMPORARY STREAM DIVERSIONS WILL BE PAID FOR AS EXTRA WORK.

2.3.2. DEWATERING OF EXCAVATIONS (SEEPAGE PUMP) MAYBE REQUIRED TO ACHIEVE WORKABLE GROUND CONDITION TO INSTALL MATERIALS CONFORMING WITH THE PLANS AND SPECIFICATIONS.

2.3.3. THE CONTRACTOR SHALL MONITOR THE TEMPORARY DIVERSION DAMS DURING THE COURSE OF THE PROJECT AND MAKE ANY REPAIRS OR REPLACEMENTS NECESSARY TO MAINTAIN THE DAMS IN FULLY FUNCTIONING CONDITION. THE ENGINEER MAY REQUIRE THAT WORK BE HALTED WHILE ANY NECESSARY REPAIRS OR REPLACEMENTS ARE MADE.

2.3.4. THE CONTRACTOR SHALL PROVIDE AT LEAST 24 HOURS ADVANCE NOTICE TO THE ENGINEER PRIOR TO REINTRODUCING RIVER FLOWS INTO ANY CONSTRUCTED CHANNEL.

2.3.5. THE LMMWC DIVERSION FLOWS AT WARD DAM MUST MAY BE INTERRUPTED FOR THREE CUMULATIVE DAYS DURING CONSTRUCTION. THE DIVERSION FLOW IS LIKELY TO BE 35 CFS, ALTHOUGH LMMWC COULD DIVERT AN ADDITIONAL 15 CFS OF STREAMFLOW AROUND THE PROJECT SITE.

2.4. PRODUCTS

2.4.1. PRELIMINARY TOP ELEVATIONS ARE SHOWN ON THE PLANS FOR REFERENCE. THE CONTRACTOR SHALL EVALUATE AND SET TOP ELEVATIONS BASED ON SPECIFIC DESIGNS TO BE IMPLEMENTED AND APPROVED BY THE ENGINEER. DAMS MAY BE DESIGNED AS SOLID BARRIERS OR WITH A GATED OPENING TO ALLOW GRADUAL REDUCTION AND INCREASE OF FLOWS.

2.4.2. DAMS SHALL BE CONSTRUCTED USING CLEAN MATERIALS THAT DO NOT POSE A RISK OF SEDIMENT DISCHARGE WHEN INSTALLED OR IF OVERTOPPED. DAMS MAY BE CONSTRUCTED ONSITE USING GRAVEL BAG AND PLASTIC SHEETING MATERIALS, OR MAY BE INSTALLED AS SOLID OR INFLATABLE IMPORTED BARRIERS SUCH AS WATER FILLED DAMS.

2.5. EXECUTION

2.5.1. TEMPORARY DIVERSION DAMS SHALL BE INSTALLED PRIOR TO PERFORMING WORK IN THE CHANNEL.

2.5.2. IF AQUATIC RELOCATION IS REQUIRED BY PROJECT PERMITS, CONTRACTOR SHALL ACCOMMODATE AQUATIC RELOCATION ACTIVITIES TO BE PERFORMED BY OTHERS AS DIRECTED BY THE ENGINEER.

2.5.3. DIVERSION DAMS MAY BE INSTALLED ON THE STREAMBED OR BY EXCAVATING BELOW STREAM GRADE AFTER AN INITIAL DIVERSION AND ISOLATION OF THE CHANNEL HAS BEEN COMPLETED.

2.5.4. DIVERSION DAMS SHALL BE COMPLETELY REMOVED AFTER COMPLETION OF CONSTRUCTION AND AREA RESTORED.

3. TEMPORARY CONSTRUCTION BMPS

3.1. SUMMARY

3.1.1. THE CONTRACTOR SHALL FURNISH ALL LABOR, MATERIAL, EQUIPMENT, AND INCIDENTALS FOR ALL WORK REQUIRED TO DEVELOP AND MAINTAIN ADEQUATE TEMPORARY CONSTRUCTION BEST MANAGEMENT PRACTICES (BMPS) TO PROTECT WATER QUALITY AND PREVENT EROSION, AS SPECIFIED IN PROJECT PERMITS, AND AS SHOWN ON THE PLANS.

3.2. CONDITIONS AND REQUIREMENTS

3.2.1. THE CONTRACTOR SHALL COMPLY WITH APPLICABLE PERMIT PROVISIONS IN THE REFERENCED PERMITS FOR THE PROJECT TO PROTECT WATER QUALITY AND PREVENT EROSION.

3.2.2. MATERIAL STORAGE WILL BE LIMITED TO STAGING AREAS APPROVED BY THE ENGINEER.

3.2.3. ALL CONSTRUCTION RELATED MATERIAL IMPORTED TO THE SITE SHALL BE CLEAN OR WASHED FREE OF ADHERED SOIL AND DELETERIOUS MATERIAL PRIOR TO FINAL PLACEMENT.

3.2.4. CONSTRUCTION EQUIPMENT SHALL BE INSPECTED FOR LEAKS AND STEAM CLEANED OFF-SITE PRIOR TO DEPLOYMENT. DURING CONSTRUCTION CONTRACTOR SHALL ROUTINELY INSPECT EQUIPMENT FOR LEAKS AND REMOVE ANY LEAKING EQUIPMENT FROM SERVICE UNTIL REPAIRED. CONTRACTOR SHALL MAINTAIN SPILL CLEANUP MATERIALS ONSITE AND RESPOND TO SPILLS AND LEAKS IMMEDIATELY TO CONTAIN AND REMOVE THE POLLUTANTS FROM THE SITE.

3.2.5. EXCAVATION, BACKFILL, AND PLACEMENT OF CONCRETE SHALL BE IN WORK AREAS ISOLATED FROM THE ACTIVE FLOWING CREEK.

3.3. PRODUCTS

3.3.1. CONSTRUCTION FENCING SHALL BE 48-INCH HIGH-DENSITY ORANGE POLYETHYLENE SAFETY FENCING WITH A MESH OPENING OF APPROXIMATELY 1 INCH BY 4 INCHES. FENCING SHALL BE ATTACHED TO STEEL OR WOOD POSTS INSTALLED IN THE GROUND AT LEAST 18 INCHES AND AT A MAXIMUM SPACING OF 12 FEET.

3.3.2. SILT BARRIER SHALL BE AS SHOWN ON THE PLANS WITH A 12-INCH DIAMETER COIR LOG INSTALLED IN A TRENCH ON THE UPSTREAM SIDE OF THE BARRIER,

3.3.3. GRAVEL BAGS SHALL BE MADE FROM A WOVEN GEOTEXTILE FABRIC. GRAVEL SHALL BE CLEAN GRANULAR MATERIAL LARGER THAN 0.25 INCHES.

3.3.4. PLASTIC SHEETING SHALL BE 6 MIL MINIMUM POLYETHYLENE OR APPROVED EQUAL.

3.4. EXECUTION

3.4.1. TEMPORARY CONSTRUCTION BMPS AS REQUIRED BY PROJECT PERMITS SHALL BE INSTALLED PRIOR TO MATERIAL DELIVERY AND CONSTRUCTION ACTIVITIES. NO SITE ACCESS FOR CONSTRUCTION OF THE WORK WILL BE PERMITTED UNTIL TEMPORARY CONSTRUCTION BMPS ARE INSTALLED AND APPROVED BY THE ENGINEER AT EACH DIVERSION SITE.

3.4.2. ADEQUATE PLASTIC SHEETING AND SILT BARRIER MATERIALS SHALL BE ON HAND TO COVER CONSTRUCTION MATERIALS IN THE EVENT THAT PRECIPITATION IS FORECAST. COVERS SHALL BE 6 MIL PLASTIC SHEETING ENCIRCLED WITH A COIR LOG SILT BARRIER AND ANCHORED WITH GRAVEL BAGS. COVERS SHALL BE INSTALLED PRIOR TO PRECIPITATION. IF PRECIPITATION IS FORECAST OVERNIGHT OR OVER A WEEKEND, COVERS SHALL BE INSTALLED AT THE END OF THE WORK DAY.

3.4.3. AT THE COMPLETION OF CONSTRUCTION, TEMPORARY CONSTRUCTION BMPS SHALL BE COMPLETELY REMOVED FROM EACH DIVERSION SITE AND DISPOSED OF BY THE CONTRACTOR.

3.4.4. AREAS DISTURBED BY INSTALLATION OF TEMPORARY CONSTRUCTION BMPS, AND ANY OTHER AREAS DISTURBED BY CONSTRUCTION ACTIVITIES, SHALL BE LIGHTLY GRADED AND TREATED WITH WOOD CHIPS.

4. CLEARING AND GRUBBING

4.1. SUMMARY

4.1.1. THE CONTRACTOR SHALL FURNISH ALL LABOR, MATERIAL, EQUIPMENT, AND INCIDENTALS FOR ALL WORK REQUIRED TO CLEAR AND GRUB TREES, PLANTS, BUSHES, WOOD, ORGANIC MATERIAL, AND OTHER MATERIALS NOT TO BE INCORPORATED IN THE WORK FROM THE AREA OF GRADING AS SHOWN ON THE PLANS.

4.2. CONDITIONS AND REQUIREMENTS

4.2.1. CLEARING AND GRUBBING OPERATIONS ARE TO BE CONDUCTED IN SENSITIVE AREAS NEAR THE CREEK AND DAMAGE TO EXISTING VEGETATION SHALL BE MINIMIZED. CLEARING AND GRUBBING OPERATIONS ARE SUBJECT TO THE REQUIREMENTS OF THE APPLICABLE PROVISIONS OF PROJECT PERMITS.

4.2.2. LOGS, BRANCHES, ROOTS, PLANTS, ORGANIC MATERIAL, REFUSE, AND OTHER MATERIAL REMOVED SHALL BE DISPOSED OF OFF THE SITE. THE CONTRACTOR IS RESPONSIBLE FOR LOCATING THE DISPOSAL SITE AND OBTAINING PERMISSION FOR DISPOSAL, FOR COMPLYING WITH APPLICABLE LAWS AND REGULATIONS FOR TRANSPORT OF MATERIALS TO BE DISPOSED, AND FOR APPROPRIATE DISPOSAL OF MATERIALS.

4.3. PRODUCTS

4.3.1. TREE WOUND PAINT SHALL BE BITUMINOUS BASED PAINT OF STANDARD MANUFACTURE SPECIFICALLY DESIGNATED FOR USE ON TREE WOUNDS AND CUTS.

4.4. EXECUTION

4.4.1. UTILITIES SHALL BE LOCATED BY UNDERGROUND SERVICE ALERT (USA) PRIOR TO COMMENCING CLEARING AND GRUBBING OPERATIONS AND UTILITIES TO REMAIN SHALL BE PROTECTED.

4.4.2. THE ENGINEER WILL MARK THE TREES TO BE REMOVED IN THE FIELD. TREES TO BE REMOVED SHALL BE FELLED AND CUT FOR TRANSPORT. STUMPS AND ROOTS SHALL BE GRUBBED IN AREAS TO BE GRADED. GRUBBING SHALL REMOVE ROOTS LARGER THAN 3 INCHES IN DIAMETER TO A DEPTH OF AT LEAST 18 INCHES BELOW THE GROUND SURFACE. DEPRESSIONS FORMED BY GRUBBING SHALL BE REGRADED AS PART OF THE WORK OR FILLED WITH NATIVE MATERIAL TO BE FLUSH WITH THE ADJACENT GROUND SURFACE.

4.4.3. TREES AND VEGETATION TO REMAIN SHALL BE PROTECTED. NO GRADING SHALL OCCUR WITHIN 5 FEET OF TREES INDICATED ON THE PLANS AS PROTECTED. MINOR ADJUSTMENTS IN SLOPE STEEPNESS OR LIMITS OF EXCAVATION AND FILL MAY BE REQUIRED TO AVOID GRADING WITHIN 5 FEET OF THESE TREES. PROTECTED TREE LOCATIONS INDICATED ON SHEET G2 ARE TO BE PROTECTED, ALTHOUGH GRADING MAY OCCUR VERY CLOSE TO, OR AROUND, THE TRUNKS. EXCAVATION AND FILL IN THE VICINITY OF TREES SO INDICATED SHALL BE PERFORMED BY HAND, TO THE EXTENT NECESSARY TO AVOID DAMAGE TO THE TREES.

4.4.4. TREES LOCATED NEAR ACCESS ROUTES OR WITH BRANCHES THAT INTERFERE WITH THE WORK SHALL BE PRUNED TO PREVENT DAMAGE BY EQUIPMENT. BRANCHES SHALL BE CUT NEAR THE BOLE OF THE TREE OR ADJACENT BRANCH. CUTS SHALL BE NEATLY MADE, WITHOUT SPLINTERING OR TEARING THE BRANCH. CUTS ON BRANCHES LARGER THAN 1½ INCHES SHALL BE PAINTED WITH AN APPROVED TREE WOUND PAINT.

5. INSTREAM GRADING WORK

5.1. SUMMARY

5.1.1. THE CONTRACTOR SHALL FURNISH ALL LABOR, MATERIAL, EQUIPMENT, AND INCIDENTALS FOR ALL WORK REQUIRED TO CONDUCT INSTREAM GRADING AND OTHER RELATED TASKS DESCRIBED IN THIS SECTION AND AS SHOWN ON THE DRAWINGS. WORK INCLUDED IN THIS SECTION INCLUDES:

5.1.1.1. FIELD LAYOUT OF STRUCTURES AND ADJUSTMENT TO FIELD CONDITIONS;

5.1.1.2. COORDINATION WITH THE OWNER OR OWNER'S REPRESENTATIVE TO MAKE FIELD ADJUSTMENTS TO THE CONFIGURATION OF IN-STREAM STRUCTURES, AS NOTED ON THE DRAWINGS;

5.1.1.3. CONSTRUCTION OF FEATURES AND STRUCTURES, INCLUDING ASSOCIATED EXCAVATION AND BACKFILL; ALSO INCLUDING COORDINATION FOR INSTALLATION OF PLANTINGS/REVEGETATION.

5.1.2. THE CONTRACTOR SHALL HAVE EXPERIENCE IN INSTREAM CONSTRUCTION AND SHALL HAVE EQUIPMENT AND TRAINED PERSONNEL APPROPRIATE TO THE WORK TO BE PERFORMED.

5.1.3. QUALITY ASSURANCE

5.1.3.1. WRITTEN GUARANTEE AGAINST DEFECTS
BEFORE FINAL ACCEPTANCE, THE CONTRACTOR SHALL PROVIDE A WRITTEN GUARANTEE AGAINST DEFECTS RESULTING FROM POOR INSTALLATION OF BIOENGINEERED STRUCTURES TO THE CONTRACTING OFFICER FOR A PERIOD OF 1 YEAR AFTER THE CONTRACTING OFFICER'S ACCEPTANCE OF THE COMPLETED INSTALLATION.

5.1.3.2. RECORD DRAWINGS
THROUGHOUT THE CONSTRUCTION PERIOD, THE CONTRACTOR SHALL KEEP WRITTEN AND PHOTOGRAPHIC NOTES RECORDING CONSTRUCTION EFFORTS AND ANY CHANGES, ADDITIONS, OR DELETIONS FROM THE DRAWINGS. THE CONTRACTOR SHALL BE RESPONSIBLE FOR PREPARING RED-LINED RECORD ("AS-BUILT") DRAWINGS FOR USE BY OTHERS. THE RECORD DRAWINGS SHALL SHOW AS-BUILT CONDITIONS, INCLUDING INFORMATION ON THE CONSTRUCTION OF THE BIOENGINEERED STRUCTURES. THE CONTRACTOR SHALL DRAFT ALL CHANGES ON ONE SET OF BLUELINE DRAWINGS. AT THE CONTRACTOR'S OPTION, THE ORIGINAL CONSTRUCTION DRAWINGS CAN BE PROVIDED BY THE CONTRACTING OFFICER IN ELECTRONIC (AUTOCAD) FORMAT.

5.1.4. ENVIRONMENTAL REQUIREMENTS
SEE "TEMPORARY CONSTRUCTION BMPS" NOTES

5.2. MATERIALS

5.2.1. ROCK
ROCK FOR THE ROCK SCOUR PROTECTION SHALL MEET THE MATERIAL SPECIFICATIONS OUTLINED IN CALTRANS STANDARD SPECIFICATION 72-2 FOR ROCK SLOPE PROTECTION. THE ROCK SHALL BE BE SOUND, DURABLE MATERIAL FREE FROM MAJOR CRACKS OR DEFECTS. ROCK MAY BE QUARRIED FROM EXCAVATION OR FROM BLASTED ROCK. ROCK SHALL BE SUB-ANGULAR OR ANGULAR AND BLOCKY IN SHAPE, AND WITH THE MAXIMUM AXIS DIMENSION NOT MORE THAN TWO TIMES THE MINIMUM AXIS DIMENSION.

ROCK SCOUR PROTECTION GRADATION CHART

ROCK MASS (kg)	PERCENTAGE LARGER THAN ROCK MASS....
1 ton	0-5
½ ton	50-100
200 lb	95-100

5.2.2. FILTER FABRIC
FILTER FABRIC SHALL MEET CLASS 8 FABRIC AS DEFINED IN CALTRANS STANDARD SPECIFICATION 72-2.

5.3. EXECUTION

5.3.1. SITE VERIFICATION OF CONDITIONS THE CONTRACTOR SHALL VERIFY SITE CONDITIONS AT THE LOCATIONS OF GRADING WORK AND IDENTIFY ANY SITE CONDITIONS THAT WOULD REQUIRE MODIFICATIONS TO THE DESIGN. THE CONTRACTOR SHALL VERIFY THAT SUITABLE WATER CONTENT, SOIL, AND OTHER ENVIRONMENTAL CONDITIONS EXIST TO CONDUCT INSTREAM GRADING WORK.

5.3.2. SCOUR APRON THE SCOUR APRON IS INTENDED TO DISSIPATE ENERGY OF THE FLOW PLUNGING OVER THE DAM CREST. SCOUR APRON ROCKS SHALL BE PLACED AND FILLED TO THE ELEVATION SHOWN ON THE SHEET C2 OR AS DIRECTED BY THE ENGINEER.

6. JUVENILE BYPASS PIPE

6.1. SUMMARY

6.1.1. THE CONTRACTOR SHALL FURNISH ALL LABOR, MATERIAL, EQUIPMENT, AND INCIDENTALS FOR ALL WORK REQUIRED TO PLACE THE JUVENILE BYPASS PIPE. THIS WORK INCLUDES THE TRENCH, PLACEMENT, AND FILL OF THE JUVENILE BYPASS PIPE.

6.2. MATERIALS

6.2.0. THE JUVENILE BYPASS PIPE SHALL BE HIGH DENSITY POLYETHYLENE WATER TRANSMISSION AND DISTRIBUTION PIPE WITH OUTSIDE DIAMETER (O.D.) OF 19.5" FOLLOWING THE STEEL PIPE SIZE (IPS) CONVENTION. THE NOMINAL INSIDE DIAMETER (ID) SHALL BE BETWEEN 18.0" AND 18.5". THE PIPE SHALL HAVE A DIMENSION RATION (DR) OF 32.5. STANDARD PIPE LENGTHS SHALL BE 45 OR 50 FOOT WITH PIPE SEGMENTS JOINED BY HEAT FUSION. THE FUSION SHALL INCLUDE THE PEELING REMOVAL OF THE INTERNAL BEAD FORMED BY THE FUSION PROCESS. ALL WELDS AND EDGES SHALL BE SMOOTH AND FREE OF BURNS OR DEFORMITIES. POLYETHYLENE PIPE AND FITTINGS SHALL BE MADE FROM VIRGIN RESINS EXHIBITING A CELL CLASSIFICATION OF PE 345444C AS DEFINED IN ASTM D3359 WITH AN ESTABLISHED HYDROSTATIC-DESIGN-BASIS TO BE PROVIDED WITH SUBMITTAL FOR WATER AT 73 DEGREES F. THE RESIN SHALL BE LISTED BY THE PPI (PLASTIC PIPE INSTITUTE) IN ITS PIPE-GRADE REGISTRY TECHNICAL REPORT (TR) 4, "LISTING OF PLASTIC PIPE COMPOUNDS."

6.2.1. THE PIPE BACKFILL IS DIVIDED INTO THREE ZONES. THE PIPE BEDDING IS DEFINED AS THE PORTION OF THE BACKFILL MATERIAL BETWEEN THE BOTTOM OF THE PIPE AND TRENCH SUBGRADE. THE PIPE ZONE BACKFILL IS DEFINED AS THAT PORTION OF THE TRENCH TO BE FILLED FROM THE PIPE BOTTOM TO 6" ABOVE THE TOP OF PIPE. THE PIPE BEDDING AND PIPE ZONE BACKFILL SHALL BE NATIVE SOILS OR IMPORT, AS REQUIRED, AND SHALL CONFORM TO CALTRANS CLASS 2 AGGREGATE BASE WITH 3/4-INCH MAXIMUM SIZE. THE TRENCH ZONE BACKFILL IS WILL FILL THE TRENCH BETWEEN THE TOP OF THE PIPE ZONE TO THE EXISTING GRADE. THE TRENCH ZONE BACKFILL WILL BE EXCAVATED FROM THE TRENCH.

6.3. EXECUTION

6.3.1. PIPE AND FITTINGS SHALL BE OF THE SIZES INDICATED. CLEAN PIPE INTERIOR OF ALL FOREIGN MATTER BEFORE INSTALLING. PIPE SHALL BE SQUARE CUT WITH FINE TOOTH SAW OR OTHER CUTTER OR KNIFE DESIGNED FOR USE WITH PLASTIC PIPE. REMOVE BURRS BY SMOOTHING EDGES WITH A KNIFE, FILE, OR SANDPAPER. INTERIOR JOINTS MUST BE SMOOTHED BY PEELING THE INTERNAL BEAD CREATED DURING THE THE FUSION PROCESS TO MATCH FACTORY INTERIOR WALL SMOOTHNESS AND REMOVE ANY AND ALL PROJECTIONS. NO GOUGES OR SCRATCHES ON THE INTERIOR OF THE PIPE WILL BE ACCEPTABLE. ANY LENGTH OF PIPE HAVING A GOUGE, SCRATCH, OR OTHER PERMANENT INDENTATION MORE THAN 10 PERCENT OF THE WALL THICKNESS IN DEPTH SHALL BE REJECTED. REPLACE ANY SECTION OF PIPE FOUND TO BE DEFECTIVE OR DAMAGED WITH NEW ACCEPTABLE PIPE. HANDLE PIPE CAREFULLY TO PREVENT GOUGING OR SCRATCHING.

6.3.2. OPEN TRENCH EXCAVATION SHALL BE USED FOR PLACEMENT OF THE JUVENILE BYPASS PIPE. THE BOTTOM WIDTH OF THE TRENCH SHALL BE NO LESS THAN 30" AND NO MORE THAN 42". THE PIPE BEDDING SHALL BE PLACED AND COMPACTED TO 95% MINIMUM RELATIVE COMPACTION. AFTER PLACEMENT OF THE PIPE, THE PIPE ZONE SHALL BE FILLED AT MAXIMUM 8-INCH UNCOMPACTED LIFTS. THE PIPE ZONE SHALL BE COMPACTED TO 95% MINIMUM RELATIVE COMPACTION. THE CONTRACTOR SHALL EXERCISE CARE TO PREVENT DAMAGE TO THE PIPE DURING INSTALLATION AND BACKFILL OPERATIONS. THE TRENCH ZONE SHALL BE FILLED IN LIFTS. THE LIFTS SHALL BE AT MAXIMUM 12-INCHES THICK WHEN UNCOMPACTED, AND COMPACTED TO A MINIMUM 90% RELATIVE COMPACTION.

7. STRUCTURAL STEEL

7.1. SUMMARY

7.1.1. STRUCTURAL STEEL WORK INCLUDES THE PRODUCTION OF THE FISH SCREEN LOUVERS, INSTALLATION OF THE FLOW ISOLATION PLATE ON THE EXISTING SCREEN, AND PRODUCTION AND INSTALLATION OF THE TRASH RACKS. THE CONTRACTOR SHALL FURNISH ALL LABOR, MATERIAL, EQUIPMENT, AND INCIDENTALS FOR ALL WORK REQUIRED IN THE PRODUCTION AND INSTALLATION OF THESE ITEMS.

7.1.2. SUBMITTALS:

7.1.2.1. THE CONTRACTOR SHALL SUBMIT SHOP DRAWINGS FOR APPROVAL 14 DAYS PRIOR TO BEGINNING FABRICATION. SHOP DRAWINGS SHALL INCLUDE THE FOLLOWING:

7.1.2.1.1. SIZES SHAPES WEIGHT OF EACH PIECE AND DIMENSION OF ALL MATERIALS USED.

7.1.2.1.2. FABRICATION DETAILS.

7.1.2.1.3. DETAILS OF ALL WELDED AND BOLTED CONNECTIONS.

7.1.2.2. CERTIFICATIONS: THE CONTRACTOR SHALL SUBMIT MILL TEST REPORTS CERTIFYING THAT THE MATERIAL MEET THE REFERENCE ASTM SPECIFICATIONS:

7.1.2.2.1. STRUCTURAL SHAPES AND PLATES

7.1.2.2.2. BOLTS, NUTS, AND WASHERS

7.1.2.3. SUBMIT WELDER CERTIFICATION PAPERS FOR ALL WELDERS DOING FIELD WELDING, SUBMIT LETTER FROM MANUFACTURER STATING ALL OFFSITE FABRICATION IS DONE BY CERTIFIED INSPECTORS.

7.2. PRODUCTS

7.2.1. SHAPES AND PLATES

7.2.1.1. CHANNELS, ANGLES, AND PLATES-ASTM A36

7.2.1.2. STEEL TUBING-ASTM A500 GRADE B

7.2.1.3. PIPE: ASTM A53, GRADE B

7.2.2. CONNECTIONS

7.2.2.1. BOLTS, WASHERS, AND NUTS: UNLESS OTHERWISE NOTED ON THE PLANS: ASTM F593 AND ASTM 594

7.2.2.2. WELDING-WELDING ROD E70XX PER ANSI/AWS D1.1

7.2.2.3. ANCHOR RODS-ASTM F1553. GRADE 36

7.2.2.4. THREADED RODS- ASTM A307

7.2.3. FINISH

7.2.3.1. HOT-DIP GALVANIZING: GALVANIZE ALL STEEL UNLESS OTHERWISE NOTED ON THE PLANS. GALVANIZE IN ACCORDANCE WITH ASTM A123/123M

7.2.3.2. EPOXY IMPREGNATED PAIN OR POWDER COATING CAN BE USED EN LIEU OF HOT-DIP GALVANIZING. COLOR SHOULD BE APPROVED BY ENGINEER.

7.3. EXECUTION

7.3.1. FABRICATE ALL STRUCTURAL STEEL FABRICATIONS IN ACCORDANCE WITH THE CONTRACT DOCUMENTS AS WELL AS AISC AND AWS SPECIFICATIONS.

7.3.2. STORE MATERIALS IN A CAREFUL AND WORKMANLIKE MANNER SO THAT DAMAGE TO THE MATERIALS EITHER FROM CORROSION OR LOADS IS AVOIDED. STORE WELDING RODS IN ORIGINAL CONTAINERS OR IN ROD ROD OVENS. RODS MUST BE KEPT DRY. WET RODS ARE NOT TO BE USED.

7.3.3. ALL WELDING WHETHER IIN THE FIELD OR THE SHOP MUST BE PERFORMED BY WELDERS CERTIFIED IN THE WELDS AND POSITIONS THAT ARE REQUIRED BY THE PLANS. SPECIAL INSPECTION IS TO BE PROVIDED WHERE REQUIRED.

7.3.4. ALL BOLTS MUST BE TENSION TO THE SNUG-TIGHT CONDITION ONLY.

7.3.5. INSTALL GALVANIZED STRUCTURAL STEEL WITHOUT DAMAGE TO COATING. ANY DAMAGE TO STRUCTURAL STEEL HALL BE REPAIRD BY STRIPPING COATING AND REDIPPING PIECE.

8. TEMPORARY ACCESS

8.1. SUMMARY

8.1.1. THE CONTRACTOR SHALL FURNISH ALL LABOR, MATERIAL, EQUIPMENT, AND INCIDENTALS FOR ALL WORK REQUIRED TO DEVELOP AND MAINTAIN ADEQUATE CONSTRUCTION ACCESS TO THE WORK.

8.1.2. SUBMITTALS

8.1.2.1. CONTRACTOR SHALL SUBMIT A TEMPORARY SITE ACCESS PLAN DESCRIBING METHODS TO BE USED TO ACCESS JOB SITE. THE PLAN SHALL DESCRIBE: THE APPROACH FOR CONSTRUCTION ACCESS TO EACH DIVERSION SITE; TRAFFIC MANAGEMENT METHODS FOR DELIVERY OF MATERIALS AND TRANSFER TO STAGING AND WORK AREAS; INSTALLATION OF TEMPORARY CONSTRUCTION BMPS TO PROTECT SOILS, VEGETATION, AND WATER QUALITY DURING CONSTRUCTION; AND METHODS TO PROTECT VEGETATION AND GROUND SURFACES OUTSIDE THE AREAS OF WORK.

8.1.3. NO WORK SHALL OCCUR UNTIL THE PLAN IS APPROVED BY THE ENGINEER.

8.2. EXECUTION

8.2.1. ANY WORK REQUIRED TO MAKE ACCESS ROADS SERVICEABLE FOR CONSTRUCTION OPERATIONS SHALL BE AT THE CONTRACTOR'S EXPENSE.

8.2.2. THE CONTRACTOR SHALL REPAIR ANY DAMAGE TO EXISTING FACILITIES AND ACCESS ROADS UTILIZED FOR PERFORMANCE OF THE WORK MEET PRE-CONSTRUCTION CONDITIONS.

8.2.3. ANY TEMPORARY FILL USED FOR CONSTRUCTION OF TEMPORARY ACCESS RAMPS SHALL BE PLACED ON PAVING FABRIC AS DEFINED IN CALTRANS STANDARD SPECIFICATION SECTION 88. ALL TEMPORARY FILL AND FABRIC SHALL BE OFF-HAULED AT COMPLETION OF THE PROJECT AT THE CONTRACTOR'S EXPENSE.

U.S. Fish & Wildlife Service
Red Bluff Fish & Wildlife Service
10950 Tyler Road
Red Bluff, California 96080
www.fws.gov/redbluff

nhc northwest hydraulic consultants
3950 industrial boulevard, suite 100c
west sacramento, california 95691
phone: (916) 371-7400
fax: (916) 371-7475
www.nhcweb.com

REGISTERED PROFESSIONAL ENGINEER BRIAN G. WARDMAN No. 74371 CIVIL STATE OF CALIFORNIA Exp: 06/30/15

PRELIMINARY NOT FOR CONSTRUCTION

Revisions

No.	Date	Description

Drawing Information

Date	1 February 2015 (07:19)
Status	95% Submittal
Designer	tvs
Drafter	tvs
Checked	bgw
File Name	WARD BASEMAP
Plotted Scale	0 1/2 1 (19.19:42)

P:\50655_Mill Creek Fish Passage Phase 1\50655dwg

Mill Creek Fish Passage Improvement Project
Ward Dam Facilities

General Notes

Job Number 50655

Sheet Number G1

Sheet 2 of 11

NOTES:
1. THE PHASE 1 IMPROVEMENTS WILL OCCUR PRIOR TO OCTOBER 15. PHASE 2 IMPROVMENTS WILL LIKELY OCCUR AFTER THE DIVERSION SEASON HAS ENDED.
2. INSTREAM WATER LEVELS ARE EXPECTED TO BE 290.0 FT TO 291.5 FT DURING THE PHASE 1 INSTREAM CONSTRUCTION
3. THE LOCAL DEWATERING BARRIERS EXTENTS ARE APPROXIMATE. ACTUAL EXTENTS WILL BE IDENTIFIED BY THE CONTRACTOR BASED ON CONTRACTOR PROPOSED DEWATERING PLAN.
4. THE LOCAL DEWATERING WILL BE PLACED AS NECCESSARY TO IMPLEMENT VARIOUS PROJECT COMPONENTS. THE NUMBER, LOCATION, AND EXTENTS OF THE BARRIERS WILL BE VARIABLE THROUGHOUT THE PHASE 1 IMPLEMENTATION.
5. HORIZONTAL AND VERTICAL CONTROL IS IN LOCAL COORDINATES.

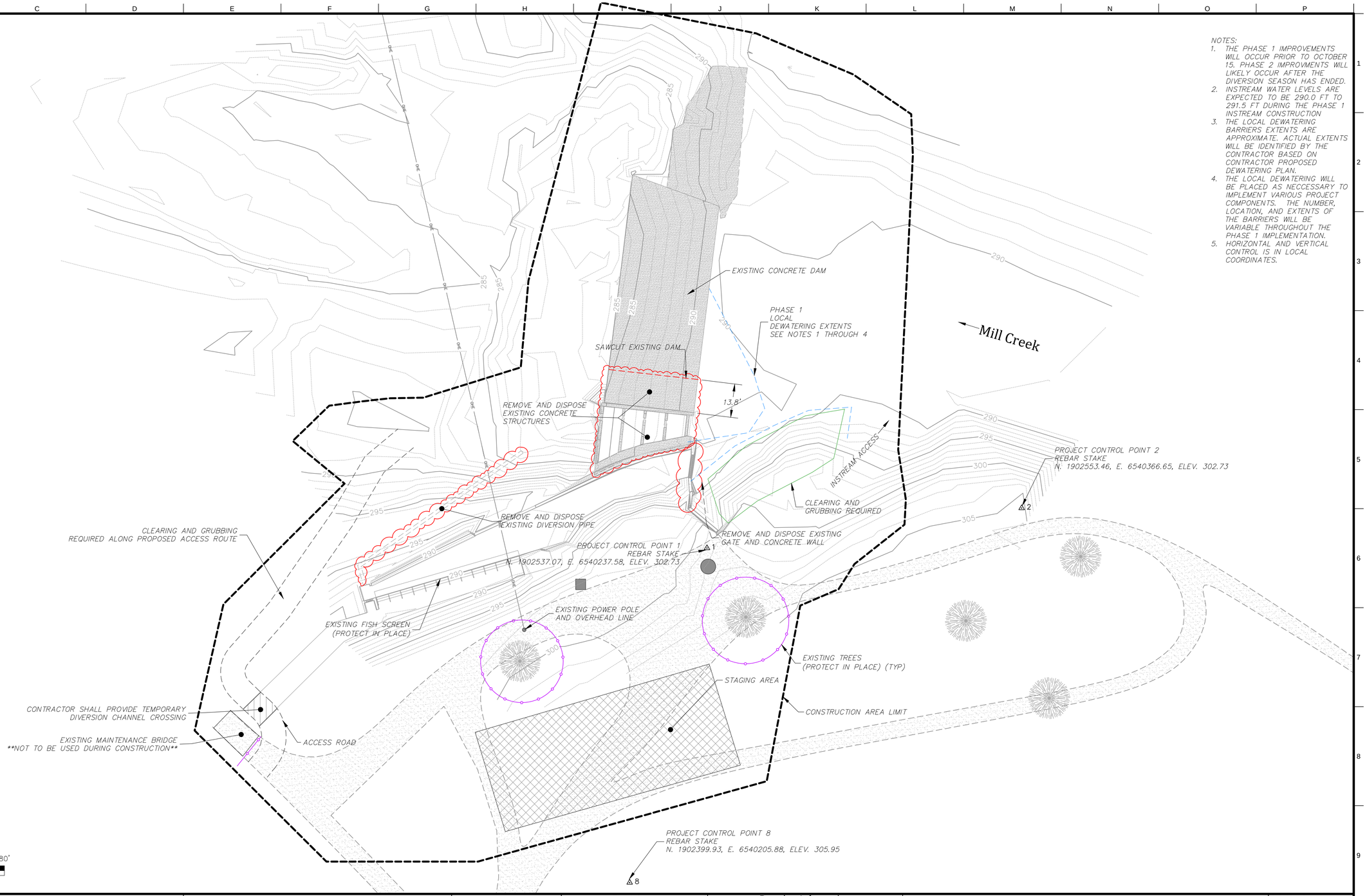

U.S. Fish & Wildlife Service
Red Bluff Fish & Wildlife Service
10950 Tyler Road
Red Bluff, California 96080
www.fws.gov/redbluff

nhc northwest hydraulic consultants
3950 industrial boulevard, suite 100c
west sacramento, california 95691
phone: (916) 371-7400
fax: (916) 371-7475
www.nhcweb.com

REGISTERED PROFESSIONAL ENGINEER BRIAN G. WARDMAN No. 74371 Exp: 06/30/15 CIVIL STATE OF CALIFORNIA

PRELIMINARY
NOT FOR CONSTRUCTION

Revisions		
No.	Date	Description

Drawing Information	
Date	1 February 2015 (07:19)
Status	95% Submittal
Designer	tvs
Drafter	tvs
Checked	bgw
File Name	WARD BASEMAP
Plotted Scale	0 1/2 1 (19:19:42)

P:\50655_Mill Creek Fish Passage Phase 1\C-50655dwg

Mill Creek Fish Passage Improvement Project
Ward Dam Facilities

Access & Demolition

Job Number 50655

Sheet Number

G2

Sheet 3 of 11

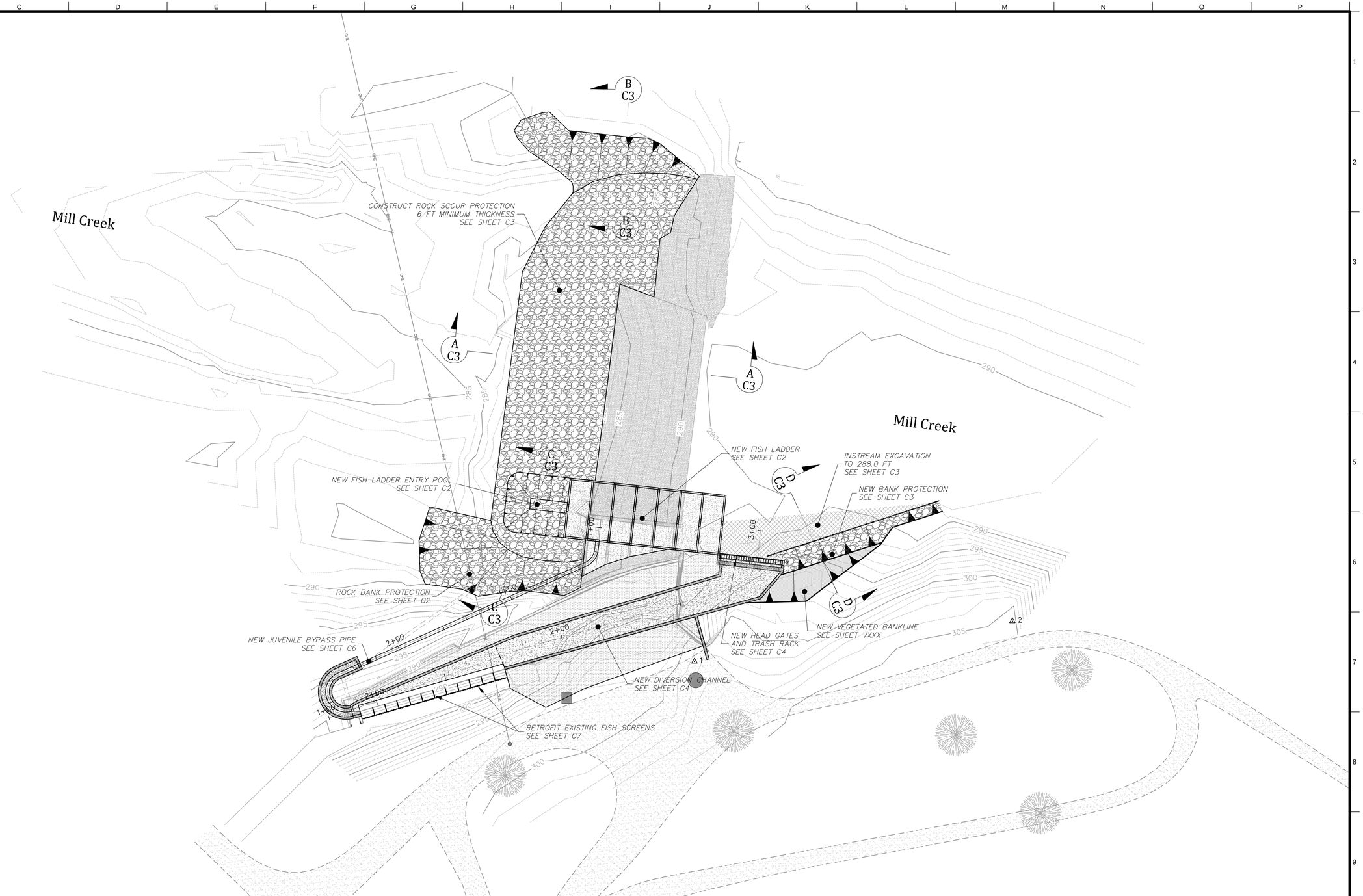

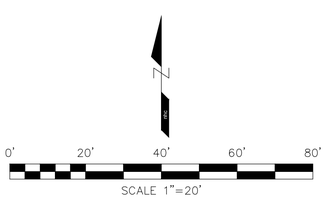

U.S. Fish & Wildlife Service
Red Bluff Fish & Wildlife Service
10950 Tyler Road
Red Bluff, California 96080
www.fws.gov/redbluff

nhc northwest hydraulic consultants
3950 industrial boulevard, suite 100c
west sacramento, california 95691
phone: (916) 371-7400
fax: (916) 371-7475
www.nhcweb.com

REGISTERED PROFESSIONAL ENGINEER
BRIAN G. WARDMAN
No. 74371
Exp: 06/30/15
CIVIL
STATE OF CALIFORNIA

PRELIMINARY
NOT FOR CONSTRUCTION

Revisions		
No.	Date	Description

Drawing Information	
Date	1 February 2015 (07:19)
Status	95% Submittal
Designer	tvs
Drafter	tvs
Checked	bgw
File Name	WARD BASEMAP
Plotted Scale	0 1/2 1 (10:19:43)

P:\50655_Mill_Creek_Fish_Passage_Ph_Rehab_FAR_2005\Dwg\

Mill Creek Fish Passage Improvement Project
Ward Dam Facilities

General Plan

Job Number
50655

Sheet Number
C1

Sheet 4 of 11

U.S. Fish & Wildlife Service
Red Bluff Fish & Wildlife Service
10950 Tyler Road
Red Bluff, California 96080
www.fws.gov/redbluff

nhc northwest hydraulic consultants
3950 industrial boulevard, suite 100c
west sacramento, california 95691
phone: (916) 371-7400
fax: (916) 371-7475
www.nhcweb.com

REGISTERED PROFESSIONAL ENGINEER BRIAN G. WARDMAN No. 74371 Exp: 06/30/15 CIVIL STATE OF CALIFORNIA

PRELIMINARY
NOT FOR CONSTRUCTION

Revisions		
No.	Date	Description

Drawing Information	
Date	1 February 2015 (07:19)
Status	95% Submittal
Designer	tvs
Drafter	tvs
Checked	bgw
File Name	WARD BASEMAP
Plotted Scale	0 1/2 1 (19:19:42)

P:\50655_Mill_Creek_Fish_Passage\Plans\50655dwg

Mill Creek Fish Passage Improvement Project
Ward Dam Facilities

Fish Ladder Plan

Job Number
50655

Sheet Number
C2

Sheet 5 of 11

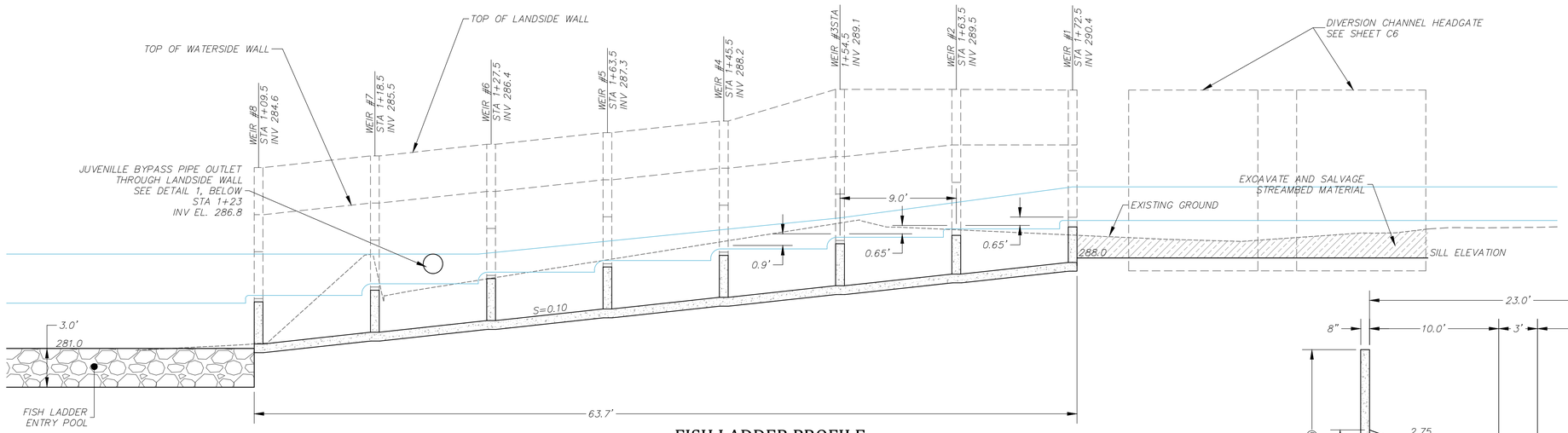

FISH LADDER PROFILE

H: 1"=5' V: 1"=5'

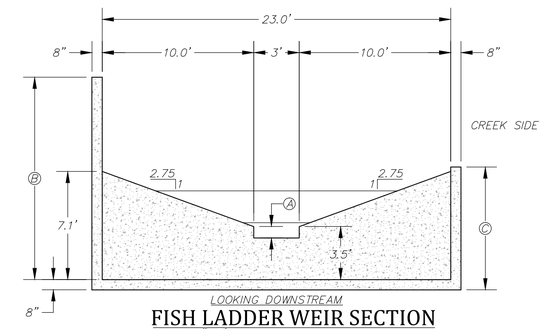

FISH LADDER WEIR SECTION

Scale: 1"=5'

WEIR DIMENSIONS			
WEIR	NOTCH HEIGHT, "A" (FT)	LANDSIDE WALL HEIGHT "B" (FT)	WATERSIDE WALL HEIGHT "C" (FT)
1	0.750	13.400	9.100
2	0.500	14.300	10
3	0.250	15.200	10
4	0.250	13.650	10
5	0.250	13.650	10
6	0.250	13.650	10
7	0.250	13.650	10
8	0.250	13.650	10

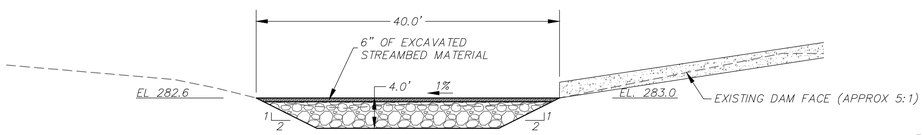

ROCK SCOUR PROTECTION (SECTION A-A)

Scale: 1"=10'

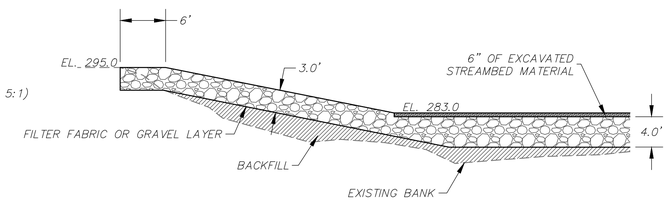

ROCK SCOUR PROTECTION (SECTION C-C)

Scale: 1"=10'

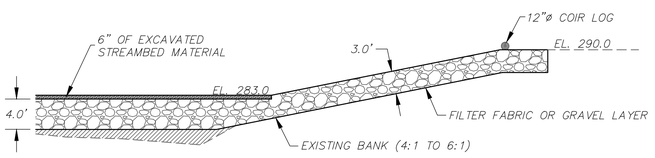

ROCK SCOUR PROTECTION (SECTION B-B)

Scale: 1"=10'

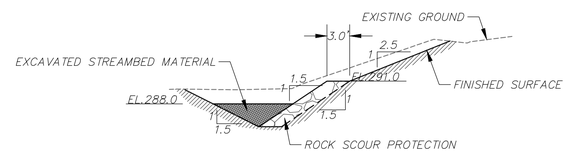

ROCK BANK PROTECTION (SECTION D-D)

Scale: 1"=10'

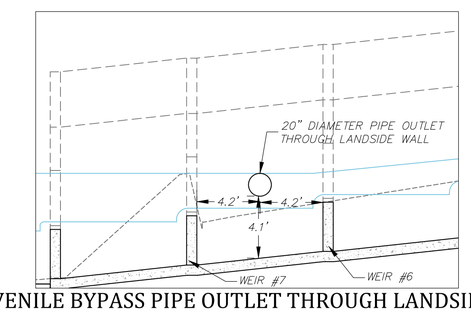

JUVENILE BYPASS PIPE OUTLET THROUGH LANDSIDE WALL

Scale: 1"=5'

U.S. Fish & Wildlife Service
Red Bluff Fish & Wildlife Service
10950 Tyler Road
Red Bluff, California 96080
www.fws.gov/redbluff

nhc northwest hydraulic consultants
3950 industrial boulevard, suite 100c
west sacramento, california 95691
phone: (916) 371-7400
fax: (916) 371-7475
www.nhcweb.com

REGISTERED PROFESSIONAL ENGINEER BRIAN G. WARDMAN No. 74371 Exp: 06/30/15 CIVIL STATE OF CALIFORNIA

PRELIMINARY NOT FOR CONSTRUCTION

Revisions		
No.	Date	Description

Drawing Information	
Date	1 February 2015 (07:19)
Status	95% Submittal
Designer	tvs
Drafter	tvs
Checked	bgw
File Name	WARD BASEMAP
Plotted Scale	0 1/2 1 (8.19:4)

P:\50655_Mill Creek Fish Passage Phase 1\50655dwg

Mill Creek Fish Passage Improvement Project
Ward Dam Facilities

Fish Ladder Details

Job Number 50655

Sheet Number

C3

Sheet 6 of 11

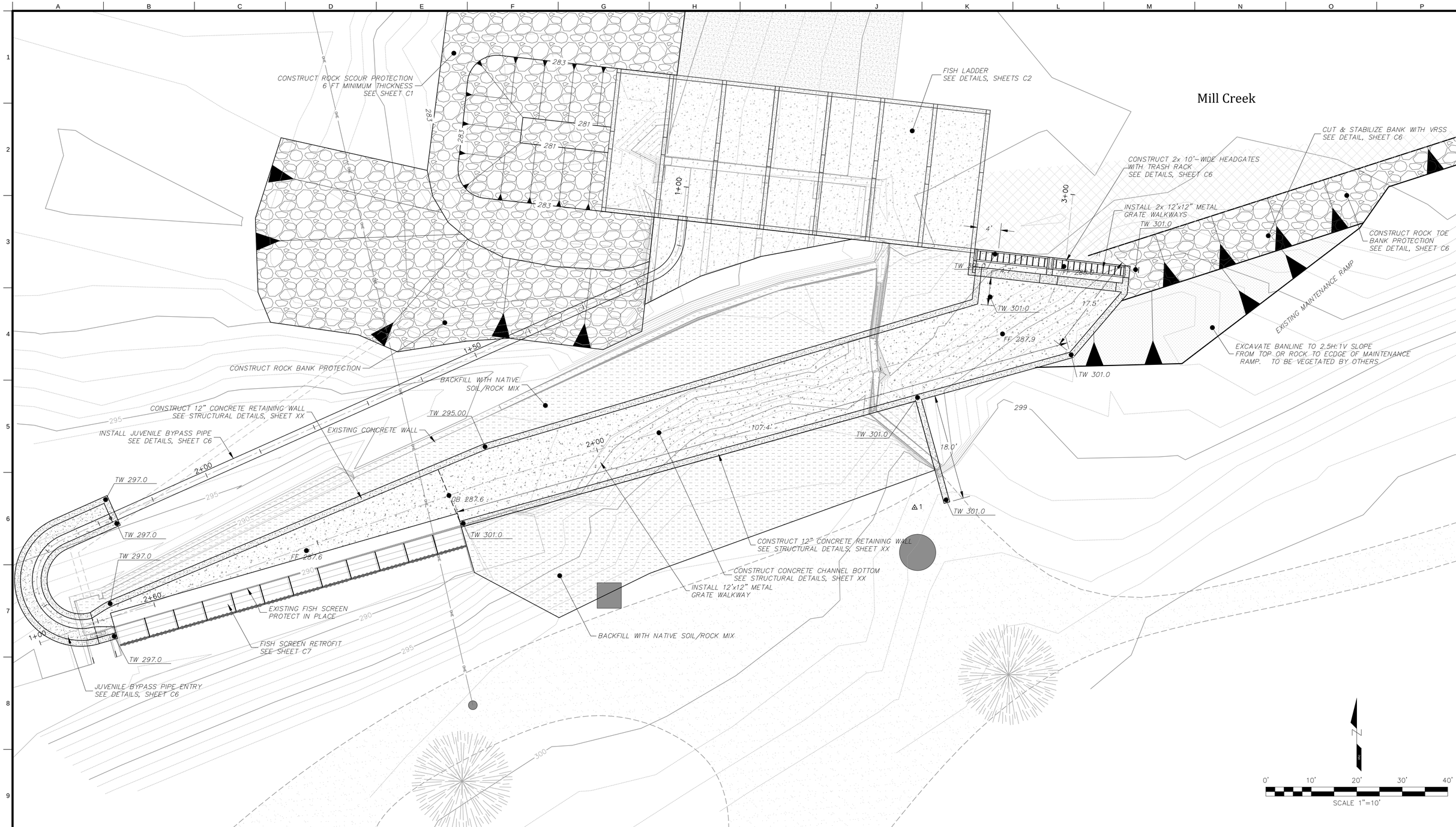

U.S. Fish & Wildlife Service
Red Bluff Fish & Wildlife Service
10950 Tyler Road
Red Bluff, California 96080
www.fws.gov/redbluff

nhc northwest hydraulic consultants
3950 industrial boulevard, suite 100c
west sacramento, california 95691
phone: (916) 371-7400
fax: (916) 371-7475
www.nhcweb.com

REGISTERED PROFESSIONAL ENGINEER BRIAN G. WARDMAN No. 74371 Exp: 06/30/15 CIVIL STATE OF CALIFORNIA

PRELIMINARY
NOT FOR CONSTRUCTION

Revisions		
No.	Date	Description

Drawing Information	
Date	1 February 2015 (07:19)
Status	95% Submittal
Designer	tvs
Drafter	tvs
Checked	bgw
File Name	WARD BASEMAP
Plotted Scale	0 1/2 1 (19:19:42)

P:\50655_Mill Creek Fish Passage_Phase_Fish\50655dwg

Mill Creek Fish Passage Improvement Project
Ward Dam Facilities

Diversion Inlet Plan

Job Number 50655

Sheet Number

C4

Sheet 7 of 11

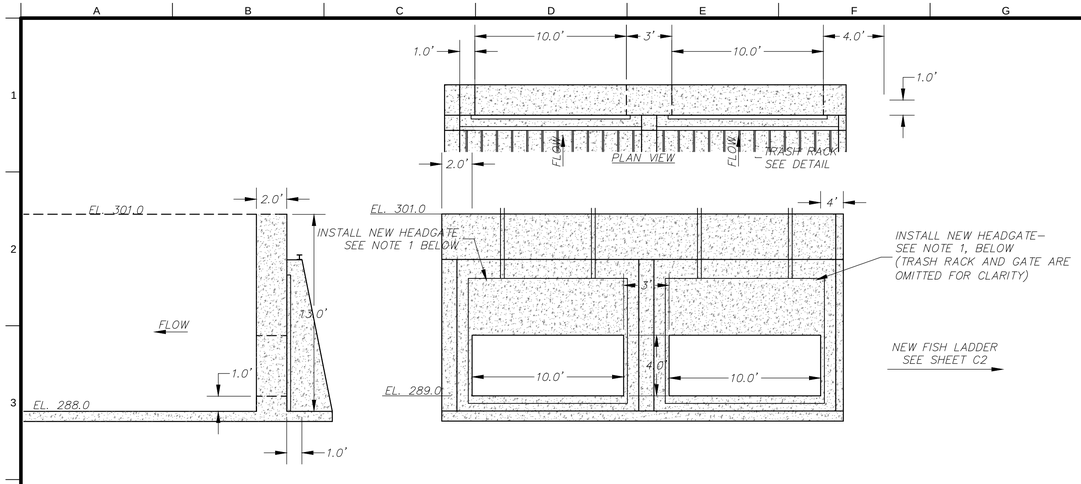

HEADGATE

Scale: 1"=5'

NOTE:
1. INSTALL TWO 120"W X 48"H GOLDEN HARVEST GH–46 STAINLESS STEEL SLIDE GATES OR EQUIVALENT

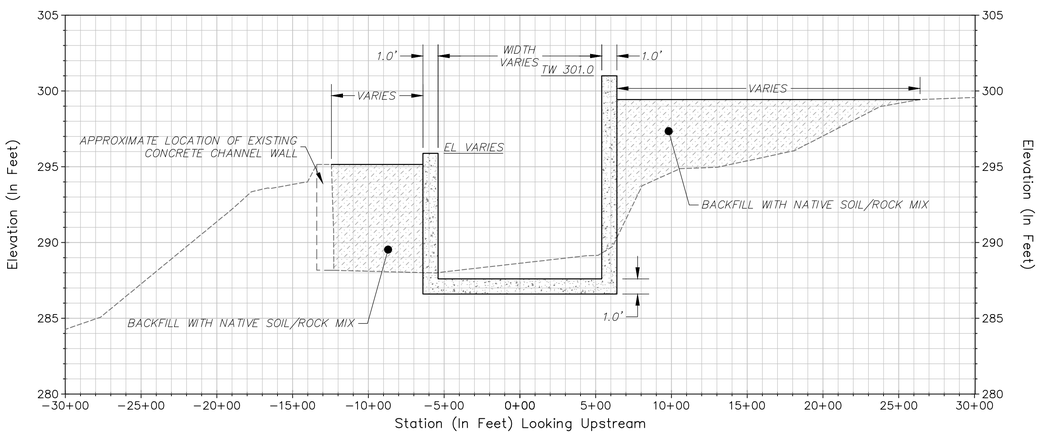

TYPICAL CHANNEL SECTION

Scale: 1"=5"

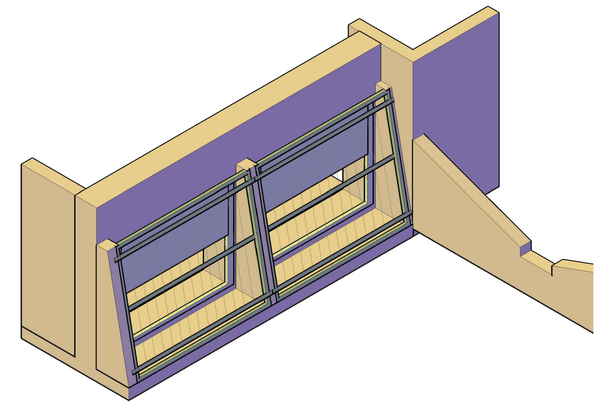

TRASH RACK AND HEADGATE ISOMETRIC VIEW

Scale: 1"=5"

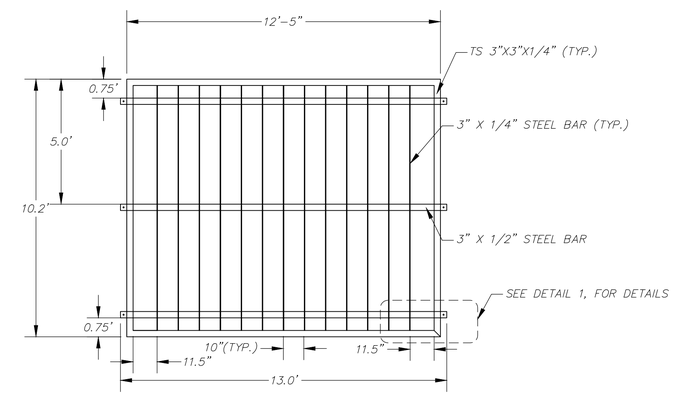

FRONT VIEW TRASH RACK

Scale: 1"=3'

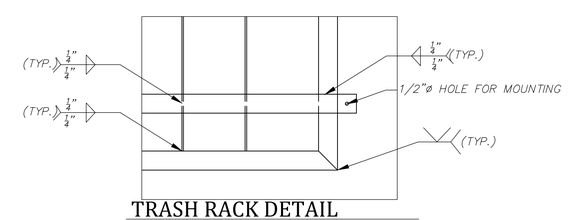

TRASH RACK DETAIL

Scale: 1"=1'

U.S. Fish & Wildlife Service
Red Bluff Fish & Wildlife Service
10950 Tyler Road
Red Bluff, California 96080
www.fws.gov/redbluff

nhc northwest hydraulic consultants
3950 industrial boulevard, suite 100c
west sacramento, california 95691
phone: (916) 371–7400
fax: (916) 371–7475
www.nhcweb.com

REGISTERED PROFESSIONAL ENGINEER
BRIAN G. WARDMAN
No. 74371
Exp: 06/30/15
CIVIL
STATE OF CALIFORNIA

PRELIMINARY
NOT FOR CONSTRUCTION

Revisions		
No.	Date	Description

Drawing Information	
Date	1 February 2015 (07:19)
Status	95% Submittal
Designer	tvs
Drafter	tvs
Checked	bgw
File Name	WARD BASEMAP
Plotted Scale	0 1/2 1 (10:19.43)

P:\50655_Mill Creek Fish Passage\Ward\WARD_2005\Dwgs

Mill Creek Fish Passage Improvement Project
Ward Dam Facilities

Diversion Inlet Details

Job Number 50655

Sheet Number

C5

Sheet 8 of 11

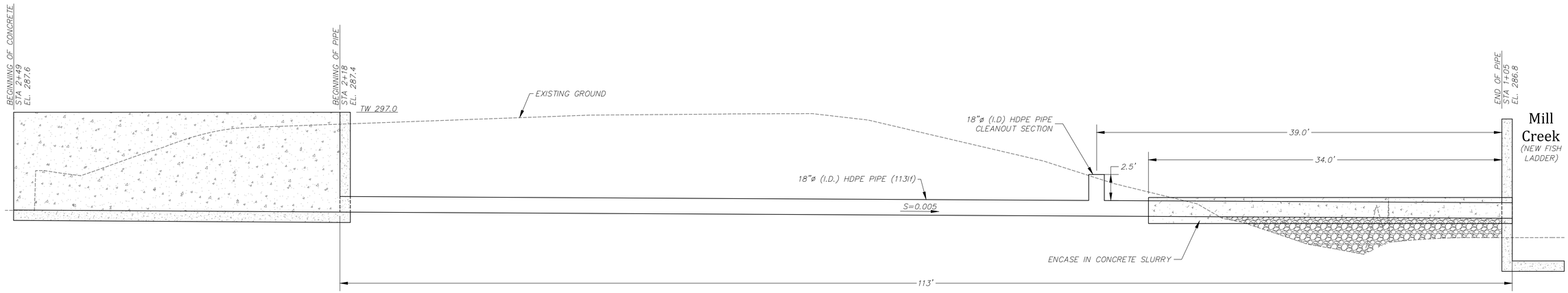

JUVENILE BYPASS PIPE PROFILE

Scale: 1"=5'

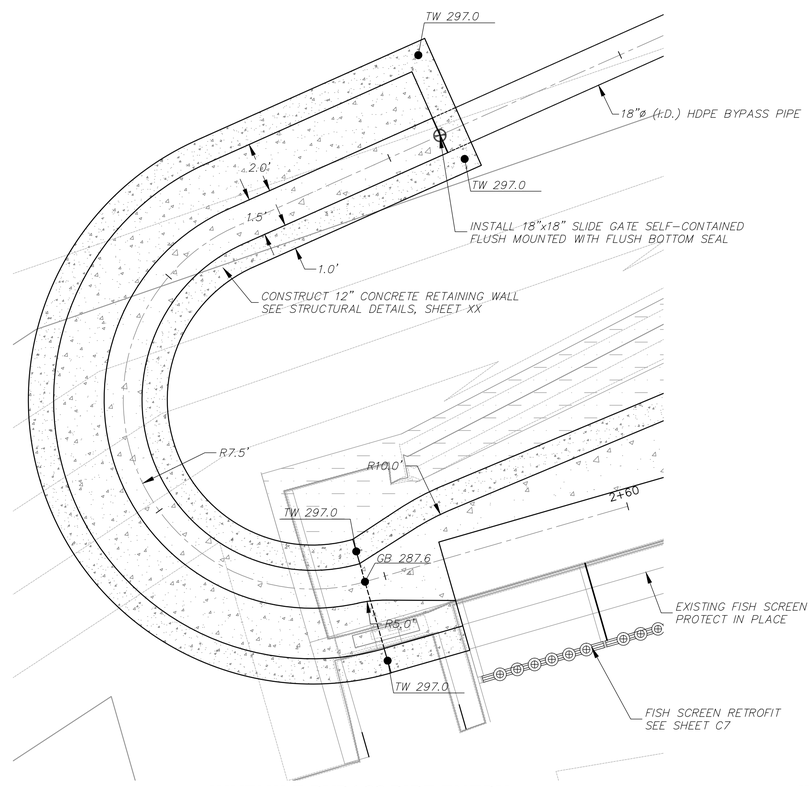

JUVENILE BYPASS PIPE ENTRY

Scale: 1"=3'

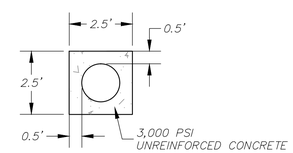

JUVENILE BYPASS PIPE CONCRETE PROTECTION TYPICAL SECTION

Scale: 1"=3'

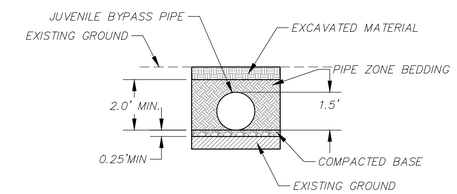

JUVENILE BYPASS PIPE TYPICAL SECTION

Scale: 1"=3'

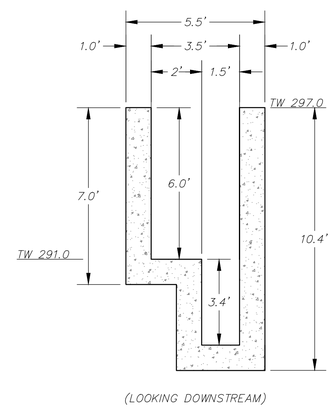

JUVENILE BYPASS PIPE ENTRY TYPICAL SECTION

Scale: 1"=3'

U.S. Fish & Wildlife Service
Red Bluff Fish & Wildlife Service
10950 Tyler Road
Red Bluff, California 96080
www.fws.gov/redbluff

nhc northwest hydraulic consultants
3950 industrial boulevard, suite 100c
west sacramento, california 95691
phone: (916) 371-7400
fax: (916) 371-7475
www.nhcweb.com

REGISTERED PROFESSIONAL ENGINEER BRIAN G. WARDMAN No. 74371 Exp: 06/30/15 CIVIL STATE OF CALIFORNIA

PRELIMINARY
NOT FOR CONSTRUCTION

Revisions		
No.	Date	Description

Drawing Information	
Date	1 February 2015 (07:19)
Status	95% Submittal
Designer	tvs
Drafter	tvs
Checked	bgw
File Name	WARD BASEMAP
Plotted Scale	0 1/2 1 (19.19:4)

P:\50655_Mill Creek Fish Passage_Phase_1\50655dwg

Mill Creek Fish Passage Improvement Project
Ward Dam Facilities

Juvenile Bypass Pipe Details

Job Number 50655

Sheet Number C6

Sheet 9 of 11

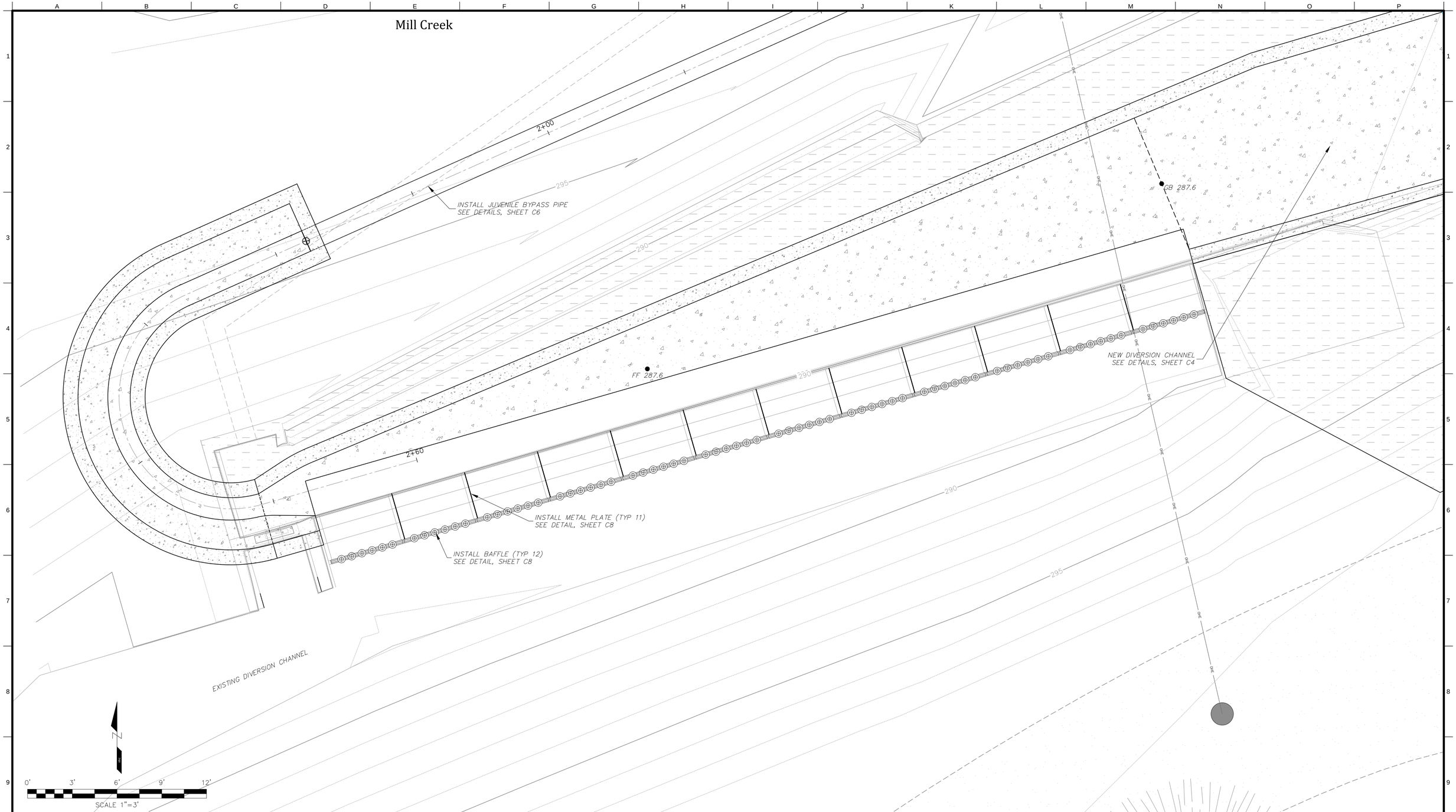

U.S. Fish & Wildlife Service
Red Bluff Fish & Wildlife Service
10950 Tyler Road
Red Bluff, California 96080
www.fws.gov/redbluff

nhc northwest hydraulic consultants
3950 industrial boulevard, suite 100c
west sacramento, california 95691
phone: (916) 371-7400
fax: (916) 371-7475
www.nhcweb.com

REGISTERED PROFESSIONAL ENGINEER
BRIAN G. WARDMAN
No. 74371
Exp: 06/30/15
CIVIL
STATE OF CALIFORNIA

PRELIMINARY
NOT FOR CONSTRUCTION

Revisions		
No.	Date	Description

Drawing Information	
Date	1 February 2015 (07:19)
Status	95% Submittal
Designer	tvs
Drafter	tvs
Checked	bgw
File Name	WARD BASEMAP
Plotted Scale	0 1/2 1 (10:19:43)

P:\50655_Mill_Creek_Fish_Passage_Project_FAC_2005\Dwgs

Mill Creek Fish Passage Improvement Project
Ward Dam Facilities

Fish Screen Retrofit Plan

Job Number
50655

Sheet Number
C7

Sheet 10 of 11

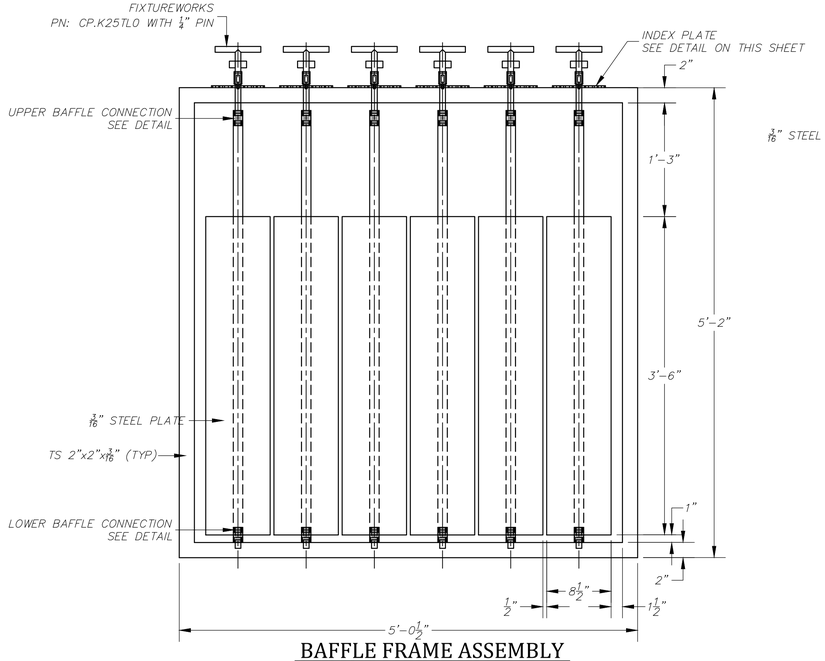

BAFFLE FRAME ASSEMBLY

Not to Scale

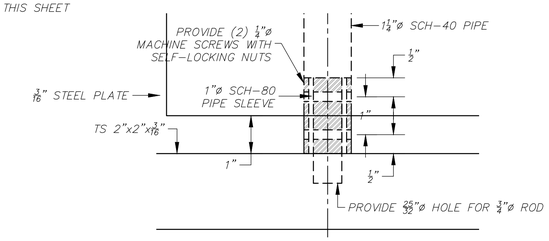

BOTTOM BAFFLE CONNECTION

Scale: 1"=6"

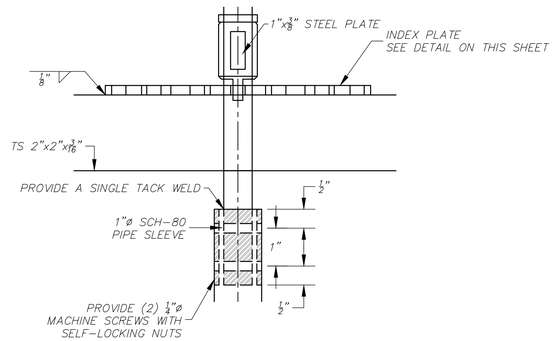

UPPER BAFFLE CONNECTION

Scale: 1"=6"

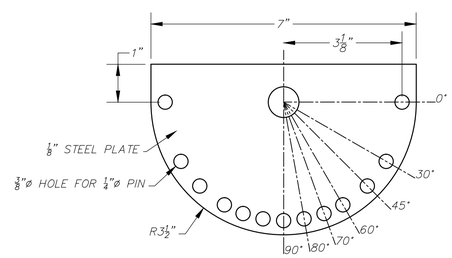

INDEX PLATE

Scale: 1"=6"

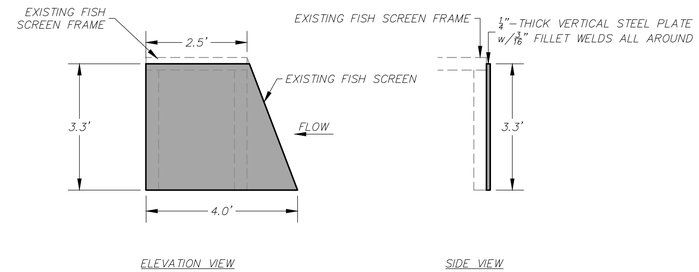

FISH SCREEN RETROFIT STEEL PLATE

Scale: 1"=6"

U.S. Fish & Wildlife Service
Red Bluff Fish & Wildlife Service
10950 Tyler Road
Red Bluff, California 96080
www.fws.gov/redbluff

nhc northwest hydraulic consultants
3950 industrial boulevard, suite 100c
west sacramento, california 95691
phone: (916) 371-7400
fax: (916) 371-7475
www.nhcweb.com

REGISTERED PROFESSIONAL ENGINEER BRIAN G. WARDMAN No. 74371 Exp: 06/30/15 CIVIL STATE OF CALIFORNIA

PRELIMINARY
NOT FOR CONSTRUCTION

Revisions		
No.	Date	Description

Drawing Information	
Date	1 February 2015 (07:19)
Status	95% Submittal
Designer	tvs
Drafter	tvs
Checked	bgw
File Name	WARD BASEMAP
Plotted Scale	0 1/2 1 (1:19.12)

P:\50655_Mill_Creek_Fish_Passage_Phase_1\50655dwg

Mill Creek Fish Passage Improvement Project
Ward Dam Facilities

Fish Screen Details

Job Number
50655

Sheet Number
C8

Sheet 11 of 11

GENERAL NOTES

1. REFER TO CIVIL IMPROVEMENTS PLAN SHEETS FOR INFORMATION NOT SHOWN.
2. THE NOTES PROVIDED ON THESE DRAWINGS DO NOT REPRESENT A COMPLETE DESCRIPTION OF THE WORK TO BE PERFORMED AND ARE INTENDED TO COMPLEMENT THE SPECIFICATIONS. TECHNICAL SPECIFICATIONS ASSOCIATED WITH THIS WORK ARE AS FOLLOWS:
   A. CALTRANS 2010 STANDARD SPECIFICATIONS SECTION 51-1 CONCRETE STRUCTURES.
   B. CALTRANS 2010 STANDARD SPECIFICATIONS SECTION 52 REINFORCEMENT.
   C. CALTRANS 2010 STANDARD SPECIFICATIONS SECTION 90-1 CONCRETE.
3. THE CONTRACTOR IS RESPONSIBLE FOR ALL CONSTRUCTION MEANS AND METHODS.
4. LOCATIONS AND DIMENSIONS OF EXISTING STRUCTURES AND FEATURES ARE APPROXIMATE AND FOR GENERAL REFERENCE ONLY. THE CONTRACTOR IS RESPONSIBLE FOR VERIFYING ALL CONTROLLING DIMENSIONS OF NEW AND EXISTING FEATURES PRIOR TO ORDERING OR FABRICATING MATERIAL OR CONSTRUCTING PROPOSED IMPROVEMENTS. THE CONTRACTOR SHALL REPORT ANY DISCREPANCIES TO THE ENGINEER PRIOR TO PROCEEDING WITH CONSTRUCTION OF THE FEATURE IN QUESTION.
5. PRIOR TO THE START OF CONSTRUCTION, LOCATE ALL EXISTING AND UNDERGROUND UTILITIES IN AND AROUND THE AREAS OF NEW CONSTRUCTION. VERIFY THAT THE PROPOSED CONSTRUCTION DOES NOT CONFLICT WITH EXISTING OR PROPOSED UTILITIES OR THAT APPROPRIATE MEANS ARE PROVIDED FOR REROUTING, SUPPORTING, PROTECTING, OR OTHERWISE INCORPORATING THE UTILITIES INTO THE CONSTRUCTION.
6. NOTIFY THE OWNER AND/OR ENGINEER WHERE A CONFLICT OR DISCREPANCY OCCURS BETWEEN THESE DRAWINGS AND ANY OTHER PORTION OF THE CONTRACT DOCUMENTS OR EXISTING FIELD CONDITIONS.
7. PRODUCTS REFERENCED ON THE DRAWINGS SHALL BE CONSTRUCTED, INSTALLED, AND/OR APPLIED IN ACCORDANCE WITH THE MANUFACTURER'S WRITTEN RECOMMENDATIONS UNLESS OTHERWISE NOTED.
8. DO NOT SCALE DRAWINGS. CONTACT THE ENGINEER FOR ANY DIMENSIONS OR SPECIFIC DETAIL NOT SHOWN..

DESIGN BASIS AND LOADING

1. THE DESIGNS DEPICTED IN THESE DRAWINGS ARE BASED ON INFORMATION PROVIDED IN THE FOLLOWING REFERENCES:
   A. TOPOGRAPHIC BASE MAP PROVIDED BY NORTHWEST HYDRAULIC CONSULTANTS (NHC), DATED APRIL 22, 2014.
   B. 90% DESIGN PLANS, MILL CREEK FISH PASSAGE, WARD DAM FISH LADDER, PREPARED BY NHC, DATED SEPTEMBER 10, 2014.
   C. GEOLOGIC RECONNAISSANCE LETTER, PREPARED BY SAGE ENGINEERS, INC., DATED DECEMBER 30, 2011.
2. DESIGN IS IN ACCORDANCE WITH THE FOLLOWING CODES AND STANDARDS:
   - ACI 318-11, BUILDING CODE REQUIREMENTS FOR STRUCTURAL CONCRETE
3. GEOTECHNICAL DESIGN PARAMETERS:
   - MOIST UNIT WEIGHT: 125 PCF
   - ACTIVE SOIL PRESSURE = 35 PCF
   - PASSIVE SOIL PRESSURE = 150 PCF (SATURATED)
   - ALLOWABLE BEARING: 5-FOOT WIDTH = 3,290 PSF >8-FOOT WIDTH = 4,520 PSF
   - FRICTION COEFFICIENT = 0.38

EXCAVATION

1. NOTIFY UNDERGROUND SERVICE ALERT (USA NORTH) TO IDENTIFY THE LOCATION OF EXISTING UTILITIES AT LEAST 48 HOURS (TWO WORKING DAYS) PRIOR TO ANY EXCAVATION WORK: (800)-227-2600 OR WWW.USANORTH.ORG.
2. STABILITY AND SHORING OF TEMPORARY CUT SLOPES AND TRENCHES SHALL CONFORM TO THE REQUIREMENTS OF CAL-OSHA.
3. EXCAVATIONS SHALL BE KEPT CLEAN AND DRY FOR THE DURATION OF THE WORK PERFORMED.

CONCRETE

1. CONCRETE STRENGTH AND MIX REQUIREMENTS:
   - MINIMUM 28-DAY COMPRESSIVE STRENGTH (f'c) = 3,000 PSI
   - MAXIMUM WATER/CEMENT RATIO = 0.45
   - MAXIMUM AGGREGATE SIZE = 1 ½"
   - CEMENT = ASTM C150 TYPE II
   - EXPOSURE CLASSES:
     FREEZING AND THAWING = F0
     SULFATE = S1
     PERMEABILITY = P0
     CORROSION = C1
2. EXPOSED CONCRETE EDGES SHALL HAVE A ¾" CHAMFER
3. REINFORCING STEEL:
   - DEFORMED REBAR = ASTM A615, GRADE 60 (fy = 60 KSI)
4. REINFORCEMENT SPACING SHOWN IS CENTER TO CENTER OF BARS
5. SECURELY POSITION REINFORCEMENT, EMBEDS, AND DOWELS PRIOR TO PLACING CONCRETE.
6. UNLESS OTHERWISE NOTED, MAINTAIN COVERAGE TO THE FACE OF REBAR AS FOLLOWS:
   - CONCRETE CAST AGAINST EARTH = 3"
   - CONCRETE EXPOSED TO EARTH OR WEATHER:
     #6 THROUGH #18 = 2"
     #5 AND SMALLER = 1 ½"
   - OTHER SURFACES = 1 ½"
7. MINIMUM LAP LENGTHS SHALL CONFORM TO TABLE 1, THIS SHEET.
8. CONSTRUCT CONTROL JOINTS IN VERTICAL CONCRETE RETAINING WALL STEM AT 20' OC.

CONCRETE FOOTING NOTES

1. FOOTING SUBGRADE: USE NATIVE SOIL OR ENGINEERED FILL COMPACTED TO A MINIMUM OF 90% RELITIVE COMPACTION BASED ON ASTM D-1557.
2. IF ENCOUNTERED SUBGRADE CONDITIONS DIFFER FROM THOSE SHOWN IN THE GEOTECHNICAL REPORT, NOTIFY SAGE IMMEDIATELY.
3. CAST TOE FACE OF FOOTING AND KEYWAYS DIRECTLY AGAINST COMPETENT EARTH. OR EXISTING CONCRETE STRUCTURES.

TABLE 1 – TYPICAL DEVELOPMENT/LAP LENGTHS [1]

BAR SIZE	f'c = 3,000 PSI		fy = 60,000 PSI		
	TOP BARS [2]		OTHER BARS		STD HOOKS
	DEV LENGTH Ld (IN)	CLASS B LAP SPLICE (IN)	DEV LENGTH Ld (IN)	CLASS B LAP SPLICE (IN)	DEV LENGTH Ldh (IN)
#3	22	28	17	22	5
#4	29	38	22	29	7
#5	36	47	28	36	8
#6	43	56	33	43	9
#7	63	81	48	63	11
#8	72	93	55	72	12
#9	81	105	62	81	14
#10	91	118	70	91	16
#11	101	131	78	101	17

FOOTNOTES
1. BASED ON ACI 318-11 SECTIONS 12.2.2 AND 12.5.2.
2. TOP BARS SHALL BE DEFINED AS ANY HORIZONTAL BAR PLACED SUCH THAT MORE THAN 12" OF FRESH CONCRETE IS CAST IN THE MEMBER BELOW THE BAR IN ANY SINGLE POUR. HORIZONTAL WALL BARS ARE CONSIDERED TOP BARS.

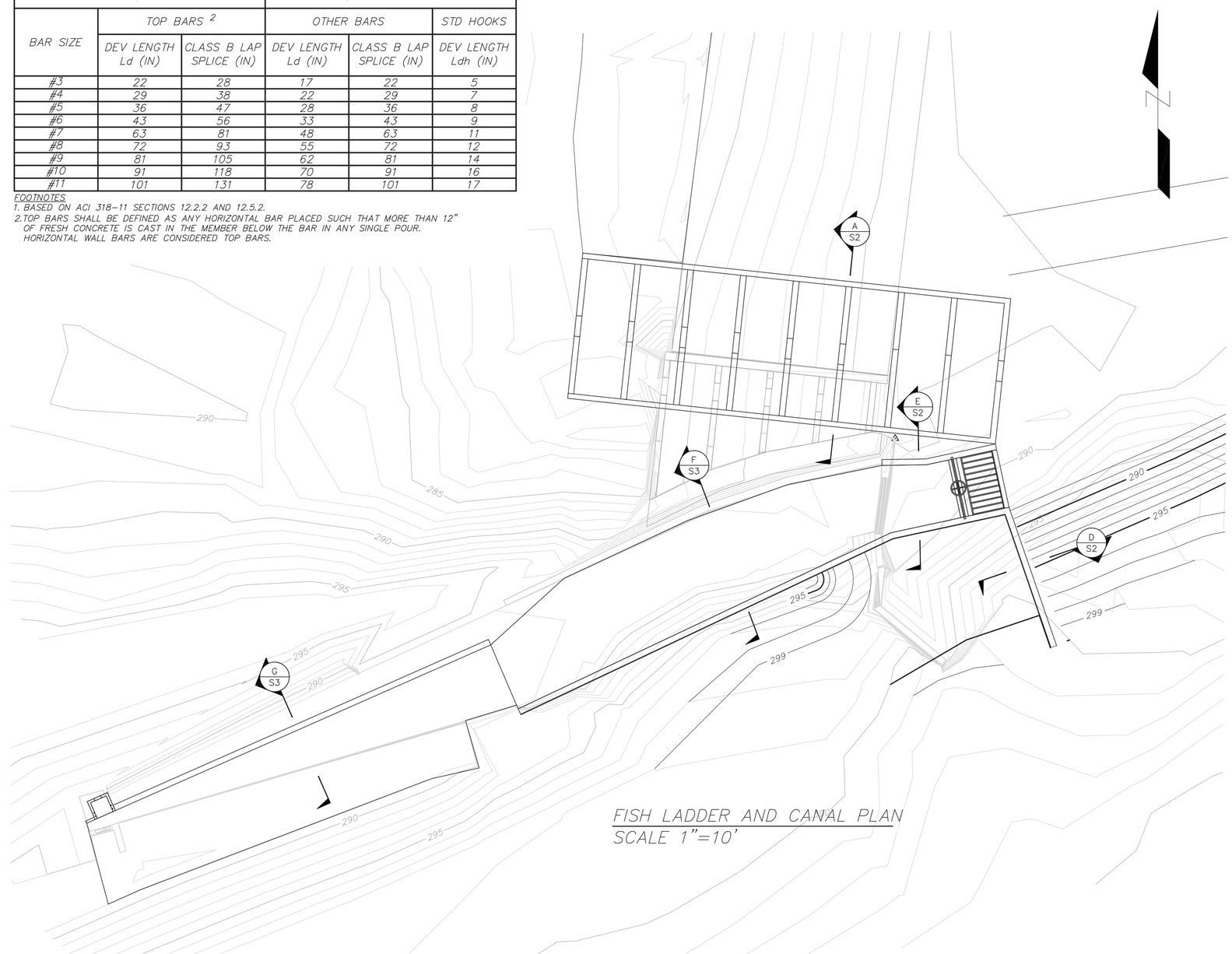

FISH LADDER AND CANAL PLAN
SCALE 1"=10'

90% SUBMITTAL

Client / Agency
U.S. Fish and Wildlife Service
Red Bluff Fish and Wildlife Service
10950 Tyler Road
Red Bluff, California 96080

SAGE ENGINEERS
EARTH • WATER • ENERGY
2251 Douglas Blvd., Ste. 200
Roseville, CA 95661
(916) 677-4800
www.SAGEengineers.com

REGISTERED PROFESSIONAL ENGINEER TRAVIS W. KOCH No. 75422 Exp. 12/31 CIVIL STATE OF CALIFORNIA

PRELIMINARY
NOT FOR CONSTRUCTION

Revisions		
No.	Date	Description

Drawing Information	
Date	28 September 2014 (21:51)
Designer	S. MOOSE
Drafter	L. CHAPMAN
Checked	T. KOCH
File Name	11-018.00-WARD.dwg
Plotted Scale	0 ½ 1

WARD DAM FISH PASSAGE IMPROVEMENT

STRUCTURAL NOTES AND PROPOSED PLAN

Job Number 11-018.00

Sheet Number S1

Sheet 11 of 13

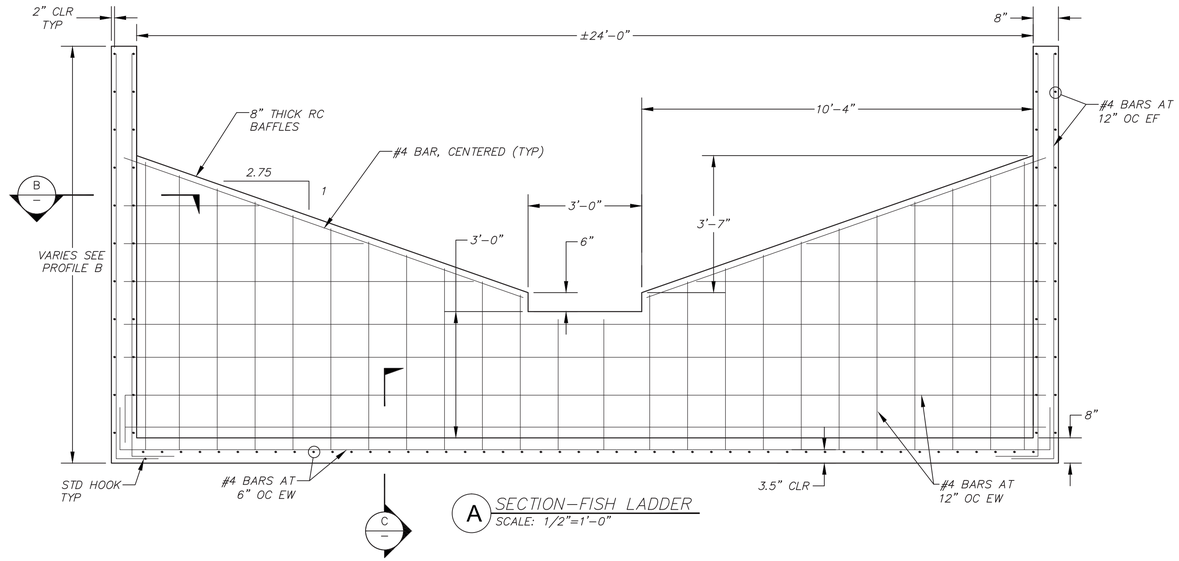

A SECTION–FISH LADDER
SCALE: 1/2"=1'-0"

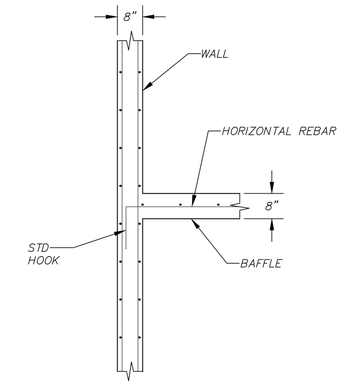

B FISH LADDER CROSS SECTION
SCALE: 1/2"=1'-0"

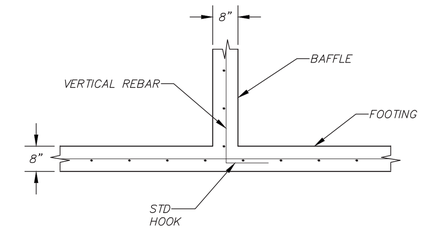

C FISH LADDER CROSS SECTION
SCALE: 1/2"=1'-0"

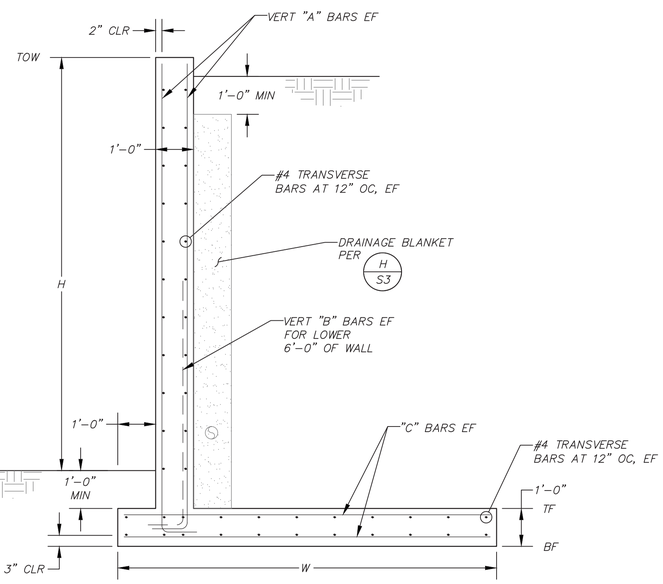

MAX H	STEM		FOOTING	
	"A" BARS	"B" BARS	W	"C" BARS
6'-0"	#4@12"	N/A	5'-0"	#4@12"
11'-11"	#6@12"	#6@12"	10'-0"	#5@6"

D SECTION–CANAL INTAKE RETURN WALL
SCALE: 1/2"=1'-0"

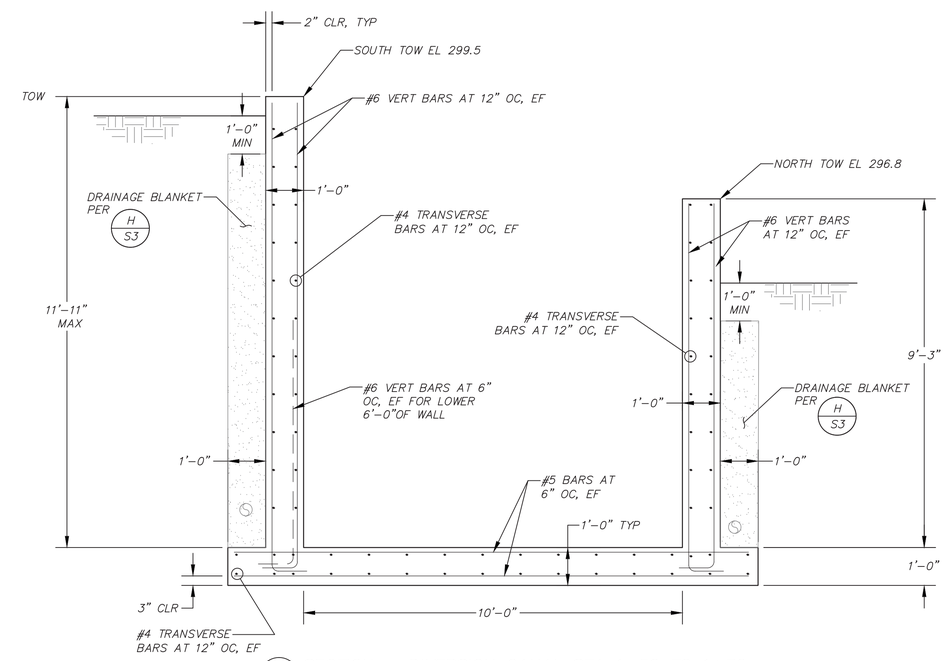

E SECTION – DIVERSION CANAL STA 1+52 TO 1+72
SCALE: 1/2"=1'-0"

90% SUBMITTAL

Client / Agency

U.S. Fish and Wildlife Service
Red Bluff Fish and Wildlife Service
10950 Tyler Road
Red Bluff, California 96080

SAGE ENGINEERS
EARTH • WATER • ENERGY

2251 Douglas Blvd., Ste. 200
Roseville, CA 95661
(916) 677-4800
www.SAGEengineers.com

REGISTERED PROFESSIONAL ENGINEER TRAVIS W. KOCH No. 75422 Exp. 12/31/15 CIVIL STATE OF CALIFORNIA

PRELIMINARY NOT FOR CONSTRUCTION

Revisions		
No.	Date	Description

Drawing Information	
Date	28 September 2014 (21:51)
Designer	S. MOOSE
Drafter	L. CHAPMAN
Checked	T. KOCH
File Name	11-018.00-WARD.dwg
Plotted Scale	0 ½ 1

WARD DAM FISH PASSAGE IMPROVEMENT

STRUCTURAL SECTIONS AND DETAILS

Job Number 11-018.00

Sheet Number S2

Sheet 12 of 13

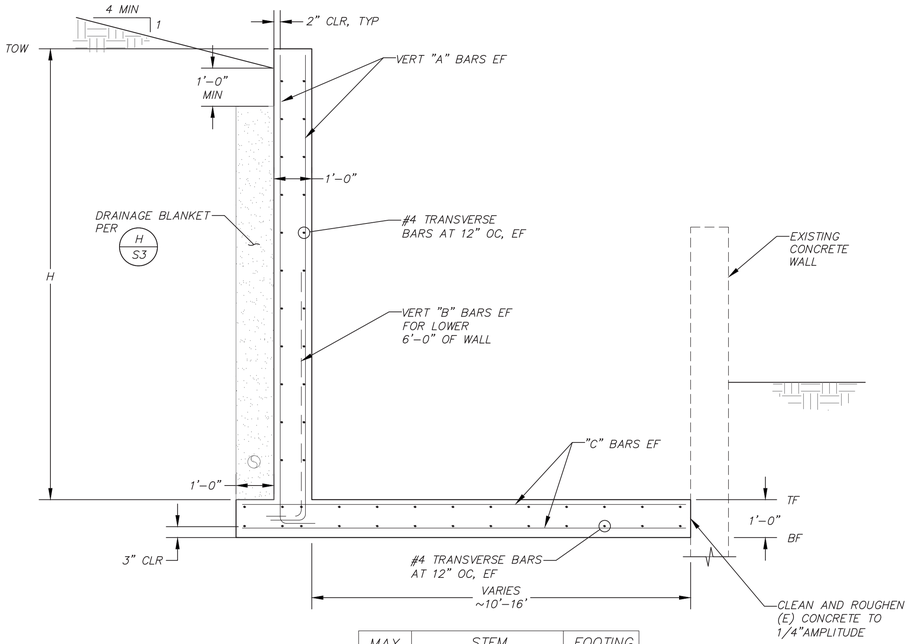

MAX H	STEM		FOOTING
	"A" BARS	"B" BARS	"C" BARS
7'-5"	#4@12"	N/A	#4@12"
11'-11"	#6@12"	#6@12"	#5@6"

F SECTION – DIVERSION CANAL STA 0+80 AND 1+52
SCALE: 1/2"=1'-0"

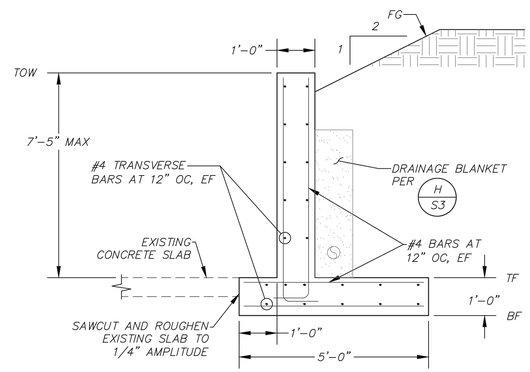

G SECTION – DIVERSION CANAL STA 0+05 TO 0+96
SCALE: 1/2"=1'-0"

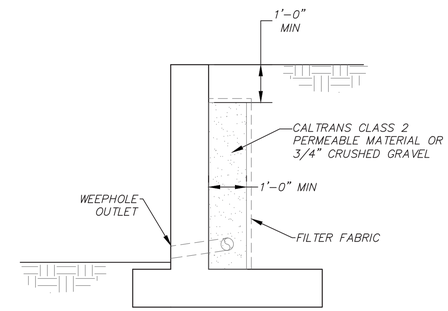

NOTES:
1. PROVIDE 4"ø OUTLETS AT LOW POINTS AND EVERY 50' MIN. LOCATE OUTLETS 12" ABOUVE FINISHED GRADE.
2. SUBDRAIN: 4"ø SDR35 PVC PERFORATED PVC WITH PERFORATIONS FACING DOWNWARD.
3. USE MIRAFI 160N FILTER FABRIC (OR EQUIVALENT) WHEN 3/4 " CRUSHED ROCK IS USED.

H DRAINAGE DETAIL
SCALE: 1/2"=1'-0"

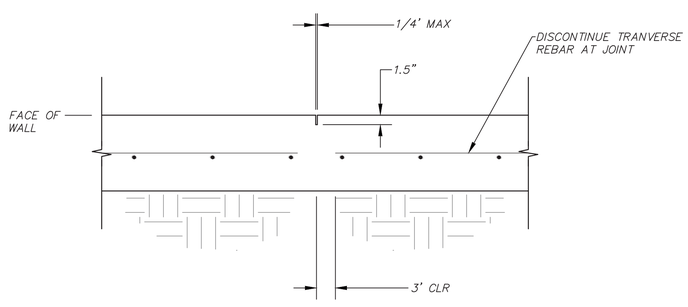

J CONTROL JOINT
NTS

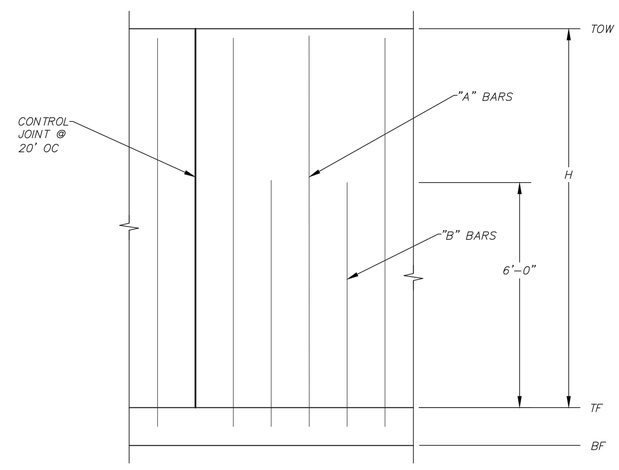

NOTE: WALL HORIZONAL REINFORCEMENT AND FOOTING REINFORCEMENT NOT SHOWN.

K PARTIAL WALL ELEVATION
SCALE: 1/2" = 1'-0"

90% SUBMITTAL

Client / Agency

U.S. Fish and Wildlife Service
Red Bluff Fish and Wildlife Service
10950 Tyler Road
Red Bluff, California 96080

SAGE ENGINEERS
EARTH • WATER • ENERGY

2251 Douglas Blvd., Ste. 200
Roseville, CA 95661
(916) 677-4800
www.SAGEngineers.com

REGISTERED PROFESSIONAL ENGINEER TRAVIS W. KOCH No. 75422 Exp. 12/31 CIVIL STATE OF CALIFORNIA

PRELIMINARY
NOT FOR CONSTRUCTION

Revisions		
No.	Date	Description

Drawing Information	
Date	29 September 2014 (12:11)
Designer	S. MOOSE
Drafter	L. CHAPMAN
Checked	T. KOCH
File Name	11-018.00-WARD.dwg
Plotted Scale	0 ½ 1

WARD DAM FISH PASSAGE IMPROVEMENT

STRUCTURAL SECTIONS AND DETAILS

Job Number 11-018.00

Sheet Number

S3

Sheet 13 of 13

APPENDIX C

95% Basis of Design

Mill Creek Fish Passage Assessment and Restoration Project, Phase 1
Ward Dam Site
95% Basis of Design and Plans

U.S. Fish and Wildlife Service

February 1, 2015

northwest hydraulic consultants

Mill Creek Fish Passage Assessment and Restoration Project, Phase I
Ward Dam Improvements
95% Plans, Technical Specifications and Basis of Design

Submitted to:

U.S. Fish and Wildlife Service
Red Bluff Fish and Wildlife Office
10950 Tyler Road
Red Bluff, CA 96080
Attention: Brenda Olson

Submitted by:

northwest hydraulic consultants
3950 Industrial Blvd, Suite 100C
West Sacramento, CA 95691

Contact: Brian Wardman, P.E.
Phone: (916) 371-7400
bwardman@nhcweb.com

Submitted on:

February 1, 2015

File 50655 Task 8

nhc

This page was intentionally left blank

Report Prepared by:

_____
Brian Wardman, P.E., Project Engineer

_____
L. Joey Howard, P.E., Principal, Cascade Stream Solutions

_____
Ken Rood, Project Manager/Review

DISCLAIMER

This document has been prepared by **northwest hydraulic consultants** in accordance with generally accepted engineering practices and is intended for the exclusive use and benefit of the US Fish and Wildlife Service and their authorized representatives for specific application to the Mill Creek Fish Passage Project. The contents of this document are not to be relied upon or used, in whole or in part, by or for the benefit of others without specific written authorization from **northwest hydraulic consultants**. No other warranty, expressed or implied, is made.

Northwest hydraulic consultants and its officers, directors, employees, and agents assume no responsibility for the reliance upon this document or any of its contents by any parties other than the client for whom the document was prepared.

Table of Contents

1. Introduction 1
1.1 Purpose 1
1.2 95% Report Description 1
1.3 Previous Submissions 1

2. Topographic Data and Datum 2
2.1 Topographic Surveys 2
2.2 As-Built Drawings 2
2.3 Property Boundaries and Rights-of-Way 2
2.4 Utilities 2

3. Existing Condition 3

4. Design Criteria 4
4.1 Design Species 4
4.2 Hydrologic Design 5
4.3 Hydraulic Design 5
4.4 Upstream Fish Passage Criteria (Fish Ladder) 5
4.5 Downstream Fish Passage Criteria (Fish Screens) 6
4.5.1 In-Canal Fish Screen Criteria 6
4.5.2 Fish Return Bypass Criteria 6
4.6 Geological/Geotechnical Design Criteria 7

5. Hydraulic Design 7
5.1 Introduction 7
5.2 Fish Ladder Design 8
5.3 Diversion Intake 10
5.4 Fish Screen Design 10
6.5 Bypass Return Pipe 10
5.5 Dam Upgrades and Repairs 11
5.5.1 General Description 11
5.5.2 Scour Considerations 12
5.5.3 Scour Depth Calculations 12
5.5.4 Requirement for Scour Protection 13
5.5.5 Design of Scour Protection 14
5.6 Diversion Hydraulics under Project Conditions 15
5.7 Stream Hydraulics under Project Conditions 16

6. Project Implementation 18
6.1 LMMWC Constraints on Construction 18
6.2 Site Access 18
6.3 Flow Diversions during Construction 18
6.4 Diversion Channel Construction 20
6.5 Re-Vegetation and Mitigation 20

7. Opinion of Probable Cost 20
7.1 Construction Costs 20
7.2 Total Project Implementation Costs 20

8. References 23

List of Figures

Figure 1: Existng conditions at Ward Dam, fish ladder and diversion intake. March 2011. Mean daily stream flow recorded at USGS Gage 11381500 was 550 cfs. 4
Figure 2. Fish ladder typical section and Exit Weir 9
Figure 3. Mill Creek at Ward Dam, December 11, 2014 (courtesy of LMMWC) 11
Figure 4: Ward Dam upper and lower fish passage water surface profiles for Existing Condition (EC) and Project Condition (PC). 17
Figure 5: Ward Dam 10- and 100-year water surface profiles for Existing Condition (EC) and Project Condition (PC). 17
Figure 6. 2011, 2014 and Average Daily Flows at USGS gage on Mill Creek. 19

List of Tables

Table 1: Mill Creek Ward Dam Peak Flows 5
Table 2: Mill Creek at Ward Dam Fish Passage Flows 5
Table 3: Hydraulic conditions at ladder entrance and exit at the upper and lower limit flows 8
Table 4. Bypass Pipe Hydraulics 10
Table 5: Computed riprap gradation for scour apron 14
Table 6. Flow split between fishway, diversion, and dam crest 19
Table 7: 90% Project Implementation Costs including Contingencies 21
Table 8: Engineer's Opinion of Probable Cost 21

List of Appendices

Appendix A: 95% Design Plan
Appendix B: CDFW Fish Passage Improvement Design Checklist
Appendix C: Responses to 90% TAC Team Comments

1. Introduction

1.1 Purpose

U.S. Fish and Wildlife Service (USFWS) has tasked Northwest Hydraulic Consultants (NHC) and their sub-consultants – North State Land Surveying (NSLS), SAGE Engineering Inc (SAGE) and Cascade Stream Solutions (Cascade) – with the preparation of construction documents for fish passage improvements at Ward Dam near Los Molinos, CA. Ward Dam is owned by Los Molinos Mutual Water Company (LMMWC) and is located on Mill Creek about 1.25 miles upstream of the Shasta Boulevard Bridge and about 4,000 feet downstream of another LMMWC diversion dam.

The Ward Dam facility consists of a 6 foot tall concrete diversion dam that spans the active channel of Mill Creek, a fish ladder on the left (south) extent of the dam, and a diversion with an off-channel (in-canal) juvenile fish screens and bypass pipe. Both the fish ladder and fish screens have fish passage deficiencies and the objectives of the Ward Dam Project are to improve upstream adult migration and juvenile bypass.

The USFWS Technical Advisory Committee (TAC) selected an alternative that keeps Ward Dam in place but replaces the existing fish ladder with one that will provide passage over a larger range of flows. As part of the alternative, the existing on-canal fish screens will be augmented to improve approach and sweeping flows and the bypass return pipe will be replaced.

1.2 95% Report Description

Key changes to the 90% plan set include: adjustment of the diversion intake to reduce sediment deposition in the diversion headgate and in the diversion channel, removal of the proposed dam crest extension on the north edge of the diversion dam, an increase in the diameter of the juvenile bypass pipe from 15” to 18”, and re-alignment of the bypass pipe. The 95% plans are in Appendix A. The updated CDFW Fish Passage Improvement Checklist is in Appendix B. Responses to comments from the TAC on the 90% submission are in Appendix C.

This report presents the engineering basis of design for the 95% plans to improve fish passage at Ward Dam site on Mill Creek. Chapter 1 describes the project background and objectives. Chapter 2 summarizes topographic data and reference elevation datum at the site. Chapter 3 describes existing condition at the site; Chapter 4 briefly describes the proposed project. Chapter 5 discusses the design criteria while Chapter 6 discusses the results of hydraulic analyses of the stream channel and fish ladder. Chapter 7 discusses the implementation of the project. Chapter 8 presents an opinion of probable cost.

1.3 Previous Submissions

Previous final submittals to USFWS for the Ward Dam site were:

- Mill Creek Fish Passage Phase 1 Final Pre-Design Report. Submitted to US Fish and Wildlife Service on December 30, 2011 (referred to as "Pre-Design Report")
- Mill Creek Fish Passage Phase 1 Alternatives Analysis Report Ward Dam Site. Submitted to US Fish and Wildlife Service on November 22, 2013 (referred to as "Alternatives Analysis Report")
- Mill Creek Fish Passage Assessment and Restoration Project, Phase 1: Ward Dam Site 30% Basis of Design and Plans. Submitted to US Fish and Wildlife Service on February 20, 2014 (referred to as "30% Design Report")
- Mill Creek Fish Passage Assessment and Restoration Project, Phase 1: Ward Dam Site 50% Basis of Design and Plans. Submitted to US Fish and Wildlife Service on June 10, 2014 (referred to as "50% Design Report")
- Mill Creek Fish Passage Assessment and Restoration Project, Phase 1: Ward Dam Site 90% Basis of Design and Plans. Submitted to US Fish and Wildlife Service on September 16, 2014 (referred to as "90% Design Report")

The 95% Basis of Design Report references the above reports for existing condition hydrology, previous hydraulic analyses and description of existing and project conditions.

2. Topographic Data and Datum

2.1 Topographic Surveys

The existing structure and the local site topography are based on surveys completed by North State Land Surveying, in association with NHC, in August 2011. In January 2014, NHC conducted a supplementary survey to collect information on the newly formed riffles and gravel bars downstream of the dam. The horizontal coordinates of the survey are CA State Plane, NAD83 Zone 1. Elevations refer to the North American Vertical Datum of 1988 (NAVD88) datum.

2.2 As-Built Drawings

As-built drawings of existing infrastructure were not available from Los Molinos Mutual Water Company (LMMWC) the owner of the Ward Dam.

2.3 Property Boundaries and Rights-of-Way

Property boundaries and LMMWC rights of way were not established as part of the topographic surveys. If required, surveys to establish property boundaries will be prepared as part of construction services before placing construction fencing.

2.4 Utilities

A power pole and overhead power lines are located near the existing fish screen. The power lines provide electricity to drive the fish screen gang brush. Other utilities on site have not been identified.

3. Existing Condition

Ward Dam is an 85-foot wide concrete dam, with a crest elevation of 290.9 ft and toe elevation of 285.3 ft. Repairs to the dam have included grouting the right abutment to repair erosion damage that occurred during floods, which effectively lengthened the dam crest by 50 feet. In 1997, the California Department of Fish and Game (CDFG; now "Fish and Wildlife") re-constructed the downstream face of the dam, added a new low-head fish ladder on the left side of the dam and construct new fish screens and a juvenile fish bypass pipe in the diversion channel about 80 feet downstream of the intake at the dam. Figure 1 shows the existing fish ladder and dam during spring runoff season.

Ward Dam is in a wide section of Mill Creek, partly formed by erosion on the north (right) side of the dam. During floods, flows flank the north side of the dam in an old channel on the densely vegetated floodplain and re-enter the main channel downstream of the dam. The left bank top is above the 100-year water surface elevation, and is not overtopped during large floods.

The dam has been in place for at least 50 years and it has impounded coarse sediment up to an elevation of about 290 feet behind the dam crest. The deposits extend about 200 feet or so upstream of the dam crest.

A scour hole has formed along the dam toe. The main channel reverts to its more typical channel width downstream of the scour hole, with the left and right overbanks composed of loosely deposited alluvium. Both overbanks are vegetated with young willows. The largest and oldest vegetation appears to have established after the 1997 flood event. Investigation of historic air photos show the overbank bars have been generally stable since 1997, when significant channel adjustments occurred. A cobble riffle currently exists downstream of the scour hole. The cobble riffle readjusts during high flow events that occur as frequently as every two years. The average bed slope downstream of the dam is about 0.006 ft/ft.

The Mill Creek Fish Passage Phase 1 Predesign Report (NHC, 2011) provides a detailed description of the fish ladder and fish screen. The primary deficiency of the existing fish ladder is its limited operational flow range. The ladder begins to exceed fish passage criteria for turbulence when stream flows exceed about 90 cfs, delaying migration during higher flow events. Primary deficiencies of the existing fish screens included negative sweeping velocities, substantial sediment deposition near the screens, debris accumulation in the juvenile bypass return pipe, and predation at the outfall of the juvenile bypass pipe.

Figure 1: Existng conditions at Ward Dam, fish ladder and diversion intake. March 2011. Mean daily stream flow recorded at USGS Gage 11381500 was 550 cfs.

4. Design Criteria

4.1 Design Species

The design species for this project are both fall-run and spring-run Chinook Salmon. Up-migrating adult fall-run Chinook Salmon are typically present at the project site between October and December. Up-migrating adult spring-run Chinook Salmon are typically present at the project site between February and April. High water temperatures prevent summer rearing of juvenile Chinook Salmon in the reach near Ward Dam and a natural barrier at about River Mile 7 (upstream of both Ward Dam and Upper Dam) prevents juveniles from migrating upstream to summer rearing habitat.

The TAC agreed that upstream juvenile passage will not be required at the Ward Dam site. Juvenile fall-run Chinook that are below the natural barrier at River Mile 7 are expected to be out-migrating past the site in spring and early summer as water temperatures increase. Juvenile salmon which reared in the upper watershed above River Mile 7 are expected to out-migrate with fall freshets.

4.2 Hydrologic Design

The pre-design report (NHC 2011) provides details on the calculation procedures for flood peaks and fish passage flows for the Ward Dam project sites. The hydrologic evaluation is based on the USGS Mill Creek gage near Los Molinos (USGS gage 11381500). The gage is located approximately 3 miles upstream of the Ward dam project site, and upstream of the Ward and Upper Dam LMMWC water diversions. Table 1 provides annual peak flows at various return periods. Peak flows were not adjusted for the additional watershed area downstream of the USGS gage.

Table 1: Mill Creek Ward Dam Peak Flows

Flood Peak (cfs) at return periods of					
2-year	*5-year*	*10-year*	*25-year*	*50-year*	*100-year*
5,008	8,908	12,050	16,630	20,480	24,720

The upper and lower limit fisheries flows for evaluation of fish ladder performance at Ward Dam are summarized in Table 2. CDFW (2002) specifies design high flow and low flow for fish passage as the 1% daily exceedance flow and 50% daily exceedance flow, respectively. The 1% daily exceedance flow at the Mill Creek gage near Los Molinos is 1,920 cfs; the 50% exceedance flow is 184 cfs. Mean daily flows during the fall-run migration season are about 100 cfs and flows of 70 cfs to 80 cfs are typical in below average water years.

The Upper Dam LMMWC diversion is located between the gage and project site and diverts up to 100 cfs out of the stream. The Ward Dam diversion diverts up to 50 cfs out of the stream. Given these large diversions and the uncertainty in low flows downstream of Ward Dam, the lower limit design flow for the fish ladder is set to the alternative minimum passage flow of 3 cfs.

Table 2: Mill Creek at Ward Dam Fish Passage Flows

Adult Anadromous Salmonids Upper Limit Flow	1920 cfs
Adult Anadromous Salmonids Lower Limit Flow	3 cfs

4.3 Hydraulic Design

The project site lies within a FEMA A-zone on the Tehama County FIRM Panel 1165 (Map 06103C1165H; September 29, 2011). The primary high flow hydraulic design criterion will be no rise of 100-year water surface elevations as a result of the project.

4.4 Upstream Fish Passage Criteria (Fish Ladder)

The fish ladder meets the hydraulic design criteria outlined in Flosi et al. (2010) for upstream migrating adult salmonids. These criteria includes maintaining jump heights of 1 foot or less, providing adequate attraction flow through the ladder, and ensuring adequate pool volume to allow for turbulence dissipation.

To provide adequate attraction flow, 100% of the lower limit passage flow should pass through the ladder, and at least 5% of the upper limit fish passage flow should pass through the ladder. Adequate turbulent dissipation is determined by ensuring the maximum energy dissipation factor, *EDF*, is less than 4 ft-lb/s/ft^3. The *EDF* is defined in Equation 2-1, below, where , γ is the specific weight of water, *Q* is the discharge through the fish ladder, h is the drop height between pools, and V is the effective pool volume.

$$EDF = \frac{\gamma Q h}{V} \tag{2-1}$$

As discussed in Chapter 5, the proposed fish ladder is a pool and chute fish ladder. These hybrid fish ladders include a center notch with sloping weirs that extend to the fishway walls. These designs are intended to function as a pool-and-weir fish ladder with plunging flow under low flow conditions. At moderate to high flows, the flow through the center notch is a highly turbulent streaming flow, while plunging flow occurs at the outer edges of the sloping weirs. Additional criteria in Flosi et al (2010) for chute and pool ladders includes ensuring flow over the sloping weirs occurs when flow through the center notch begins to transition to streaming flow, and that the upstream most weirs be lowered relative to the profile to account for the additional drop in water level between pools from the increasing velocity head. The design and function of the proposed design is discussed further in Section 5.2.

4.5 Downstream Fish Passage Criteria (Fish Screens)

The proposed retrofits to the existing fish screens meet the guidelines defined in Volume 1, Appendix S of the California Salmonids Stream Habitat Restoration Manual (Flosi et al 2010) and NMFS Southwest Region's "Fish Screening Criteria for Anadromous Salmonids" (NMFS 1997). Key criteria from these documents which were considered in the retrofit design are summarized in the following sections.

4.5.1 In-Canal Fish Screen Criteria

In-canal fish screen criteria are described in NMFS (1997). For self-cleaning, in-canal fish screens approach velocities (velocity component perpendicular to the screen face) shall be 0.4 feet per second or less. The diversion flow shall be evenly distributed across the screen face. The fish exposure time along the screen face shall be 60 seconds or less, where this is defined as the screen length divided by the sweeping velocity (velocity component parallel to the screen face).

4.5.2 Fish Return Bypass Criteria

An in-canal fish screen structure requires a safe and efficient route to return fish to the stream. NMFS (1997) describes the design parameters to meet fish passage requirements. The bypass entrance shall be provided with independent flow control and an entrance velocity greater or equal to maximum velocity in the diversion channel in order to provide attraction. In addition, the fish shall not free-fall or be pumped within the bypass conduit. The bypass outlet shall be located and designed to minimize

predation and be free of eddies and reverse flows. The following bullets highlight the key design considerations for this project:

- Extreme bends shall be avoided in the pipe layout to avoid excessive physical contact between small fish and hard surfaces and to minimize debris clogging.
- Pipe diameter shall be 24 inches or greater and pipe velocity shall be 2.0 fps or greater, unless otherwise approved by NMFS.
- Minimum depth of flow in a bypass conduit shall be 0.75 feet or greater unless otherwise approved by NMFS.
- No hydraulic jumps should exist within the bypass system.
- Ambient river velocities at bypass outfalls should be greater than 4.0 fps, or as close as obtainable. Impact velocity at outfall, including vertical and horizontal components, shall not exceed 25.0 fps.

4.6 Geological/Geotechnical Design Criteria

The Geological Reconnaissance Letter (SAGE 2011) states that the primary geotechnical issues that will need to be addressed as part of design at this site are:

- Given the high permeability of the stream bed deposits, significant de-watering will be required for excavation. They recommend a combination of upstream flow diversions/cutoffs and local pumping for dewatering.
- It appears that the entire dam has a cobble/gravel bar built up behind it, from transport of coarse sediment from the upstream watershed. It may not be feasible to completely mitigate the buildup of material at the existing headgate. Moving and re-orienting the headgate could minimize future sediment ingestion into the canal.

5. Hydraulic Design

5.1 Introduction

The proposed design includes removing the existing fish ladder and installing a chute and pool fish ladder. The proposed design will extend the fish ladder out into the stream 15 feet further than the existing ladder, but will meet hydraulic design criteria for stream flows between 3 and 1,920 cfs. The diversion intake has been realigned to reduce sediment deposition and ingestion. The new intake is aligned with the left bank of the proposed fishway, which increases sweeping velocities past the intake. The diversion channel and fish screens have been retro-fitted to improve flow distribution through the screens and better route flow and sediment through the juvenile bypass return pipe. The juvenile bypass return pipe has been enlarged and reoriented to improve debris passage and reduce predation at the outlet. Large rock is also to be placed along the toe of the diversion dam and fish ladder to provide scour protection. The following section describes each of the proposed project features.

5.2 Fish Ladder Design

A pool and chute fish ladder is proposed for the project. The ladder will have 9 weirs and will have a 0.9 foot drop between the 8-foot long pools. Figure 2 shows the typical weir dimensions. The typical notch height 0.25 feet, with the upstream two weirs notch height increased to 0.5 feet at the second most upstream, and 0.75 feet at the upstream most section. The increased notch height follows the recommendations of Bates (1991) to account for the increased drop in water levels over the first two weirs due to the increasing velocity head. NMFS (2011) recommends a 1 foot to 1.5 foot drop at fish ladder entrances to increase attraction. The entrance weir has an invert elevation of 284.8 feet, and should have a 0.5 foot drop under existing conditions. The low weir elevation ensures that the jump height into the fish ladder will be less than 1.5 feet, should water levels at the entrance decrease by a foot due to future changes in the downstream channel. The exit weir crest is at elevation 290.4 ft.

Flow through the center notch of the fish ladder will begin to transition to streaming flow at about 9 cfs. The depth of flow over the notch on the upstream weir will be just over 1 foot at this flow rate, submerging the lower 0.25 feet of the sloping weirs. The 9 cfs streaming depth over the downstream weirs is expected to be 0.5 feet which would maintain a 0.25 foot submergence on the sloping weirs. At the design high flow, flow depth over the upstream most weir is about 3.1 feet and the fishway flow is about 140 cfs. The streaming flow depth is 2 feet, resulting in an average drop of about 1.15 feet over the first two weirs. Minimum pool depth will be 3 feet at the design low flow with an EDF value of about 0.4 ft-lb/s/ft^3. During moderate to high flow conditions, the EDF in the plunging flow corridor is expected to be about 2.1 to 3.7. Appendix B provides further detail of the design calculations.

Table 3 summarizes the stream flow condition at the entrance and exit of the fish ladder for upper and lower limit fish passage flows. Figure 2 shows the typical section of the fish ladder design. The upper and lower limit fish passage water surface profiles and structure dimension are also shown on Sheet C3 of the 95% plan set (Appendix A). The 95% design meets all the fish ladder criteria described in Section 5.3. Wall heights on Figure 2 are set to 1 foot above the computed 2-year event water level, and 4 feet above the upper limit flow water surface elevations.

Table 3: Hydraulic conditions at ladder entrance and exit at the upper and lower limit flows

	Upper Limit Flow	Lower Limit Flow
Total Stream Flow, cfs	1920	3
WSE Upstream of Dam, NAVD88 ft	293.7	290.9
WSE Downstream of Dam, NAVD88 ft	288.4	284.5
Fish Ladder Flow cfs	140	3
Percentage Flow Through Fish Ladder, %	5.7%	100%

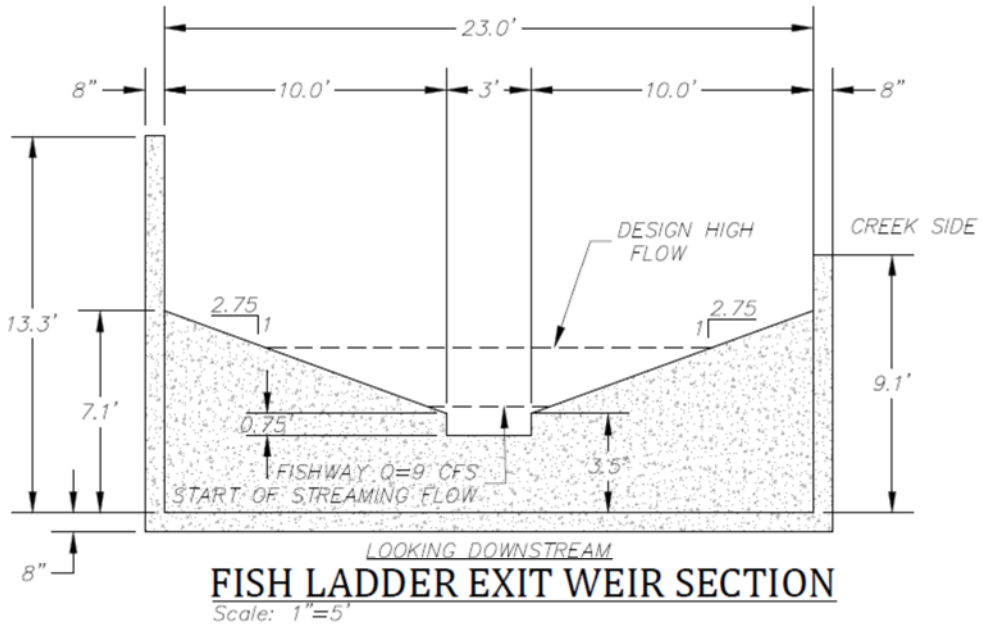

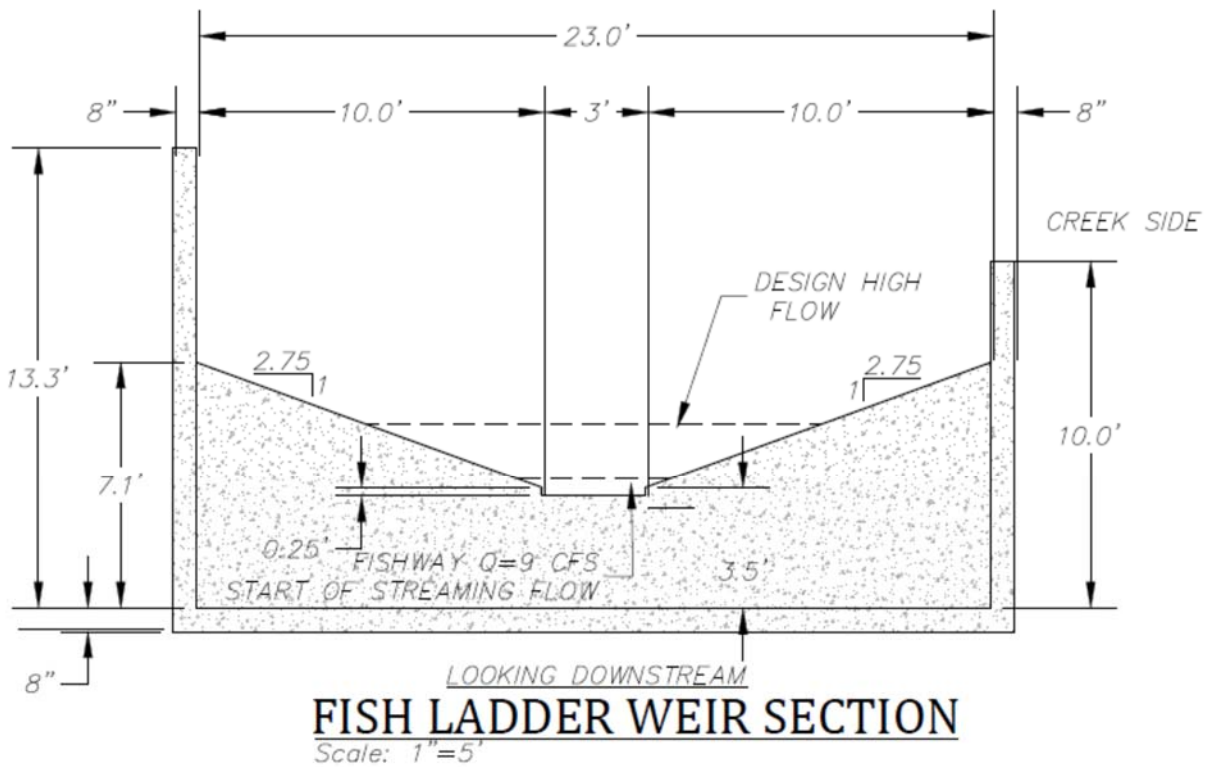

Figure 2. Fish ladder typical section and exit weir.

5.3 Diversion Intake

The diversion intake has been realigned to reduce sediment deposition and moved upstream of the new fish ladder. The new diversion intake will be located at about 40 feet upstream of the existing intake. The proposed design aligns the gate to be parallel to the stream flow. During high flow events, sweeping velocities will push sediment past the gate structure. The intake will be controlled by two 10-ft wide weir gates. The weir gates will help limit sediment ingestion and should reduce fish injury relative to the existing undershot headgates. A trash rack with 11-inch spaced bars will protect the diversion infrastructure from large debris.

The adjustments to the diversion intake require excavation of the existing bank and construction of new diversion canal walls and floor. The bank near the intake will be excavated back to a 2H:1V slope, and re-constructed as a vegetated reinforced soil slope (VRSS). The VRSS uses willow plantings and geosynthetic fabrics to stabilize the slope. The new diversion wall will be built to equivalent wall heights as the existing diversion walls. The diversion channel will be concrete.

5.4 Fish Screen Design

The newly constructed intake walls will extend down to the fish screens. The canal near the fish screens has been adjusted to maintain sweeping velocities in front of the screen of 1-2 ft/s. The existing fish screens will be fitted with steel plate to isolate each five foot length of screen bay. The upgrades to the screens also include louver frames constructed to fit into the existing flashboard slots behind the screens. When in place, the louvers will allow for flow balancing across the face of the screens.

6.5 Bypass Return Pipe

The existing 15-inch diameter return pipe will be replaced with a 120’ long 18-inch diameter HDPE pipe. The new bypass outlet will be located in the second pool of the proposed fish ladder. The pipe inlet and outlet invert elevations will be at 287.6 and 286.8, respectively.

Table 4: Bypass Pipe Hydraulics

Bypass Flow, cfs	Depth (ft)	Ratio of Flow Depth to Pipe Diameter	Velocity (ft/s)
2.5	0.5	0.33	4.8
3	0.55	0.37	5.1
3.5	0.60	0.4	5.3
4	0.65	0.43	5.5
4.5	0.69	0.46	5.7
5	0.73	0.49	5.8
5.25	0.75	0.5	5.9

The pipe slope is about 0.005 ft/ft. With a minimum 2.5 cfs bypass flow, the outfall of the bypass pipe would be a 1 foot plunge into a 3.5 deep pool. Flow in the pipe will remain open channel flow until the non-diverted streamflow exceeds about 2,000 cfs. Such a flow is unlikely to occur during the diversion season. A minimum bypass flow of 5.25 cfs will be required to meet NMFS (1997) depth criteria. Table 4 shows the depth and velocity for various bypass flow rates. Bypass pipe hydraulics and design considerations are described in detail in Appendix B – CDFW Engineering Checklist.

5.5 Dam Upgrades and Repairs

The Alternative Analysis Report for the Ward Dam Site (NHC 2013) examined scour along the downstream face of Ward Dam, identifying typical depths of about 3 feet and maximum depths of about 8 feet. Field surveys concluded that the dam toe was exposed where scour was deepest.

The 95% design includes a rock apron downstream of Ward Dam that prevents undermining of the dam face by scour, potentially leading to dam failure. This section provides the basis of design for the rock gradation and extent of the apron.

5.5.1 General Description

During peak flows, hydraulic conditions are complex at Ward Dam. Tailwater elevations in Mill Creek downstream of the dam rise to about 5 or 6 feet above the dam crest. The backwatered flow upstream of the dam crest, drops steeply to meet the downstream water surface. The one-dimensional HEC-RAS model shows a small hydraulic jump just downstream of the drop (Figure 4). Figure 3 shows the flow conditions at Ward Dam from the left bank at a flow of about 9,500 cfs (roughly the 5-year peak flow) on December 11, 2014.

Figure 3: Mill Creek at Ward Dam, December 11, 2014 (courtesy of LMMWC)

NHC (2013) described the existing scour that has occurred downstream of Ward Dam. The scour hole starts at the toe of the dam and extends about 50 feet downstream, ending in a lip formed from the coarse material removed from the toe of the dam. The largest rocks on the lip of the scour hole are about 1.5 feet in diameter.

The lowest scour elevation occurs near the left side of the dam, at the end of the wall separating the existing fish ladder from the dam face. Here, the minimum elevation is about 276 feet, or about 9 feet below the assumed bed elevation at the time of dam construction. The increased scour depth is thought to result from the flow over the dam face interacting with the fish ladder wall.

There is also a shallower scour hole on the right side of the dam, near the junction of the dam face with the repair on the right bank. Here the minimum elevation is about 281 feet, or about 4 feet lower than the assumed stream bed elevation at construction.

5.5.2 Scour Considerations

Ward Dam is an example of a low-head grade control structure, consisting of a fixed concrete crest, a sloped concrete downstream face, and an erodible downstream bed. One issue at Ward Dam is whether scour has proceeded to about the maximum, or equilibrium, depth that is likely to occur for this particular structure.

The dam face was reconstructed in the summer of 1997 – following the large flood of January 1, 1997 – and it is assumed that the bed was re-graded after excavation of the bed to construct the new face. Since the dam face was re-built peak flows have been less than about 10,000 cfs. Consequently, it seems likely that the observed scour Is a result of peak flows with return periods of 10 years or so and that additional scour will likely occur during the passage of the 100-year design flood.

5.5.3 Scour Depth Calculations

There is a considerable literature recommending different equations for calculating scour depths for grade control structures. Most of the equations are based on laboratory studies and predict an equilibrium or maximum depth for a particular range of flows, bed materials, structure geometry, and tailwater. Unfortunately, the various equations produce a wide range of scour depths for a particular structure, possibly because the field conditions are often quite different from the conditions in the laboratory studies.

For Ward Dam, which has a sloping face, no downstream apron, coarse bed material, and submergence at the design flow, the most applicable equation is one developed by Bormann and Julien (1991). Their scour calculations are based on the hydraulic characteristics of the submerged jet that flows down the dam face and the stability of the bed material exposed to the jet. The equation is complex, requires

estimation of jet parameters, and the percentile of the bed material size distribution to be used in the equation is not clearly specified.

Application of the Bormann and Julien equation to Ward Dam for the 100-year peak flow with an effective crest width of 100 feet and a characteristic bed material size of 210 mm (D_{90} from NHC 2013) results in an estimated equilibrium scour depth of about 5 feet. As a check on the results, Schoklitsch's 1932 equation, as recommended in Hoffmans and Verheij ((1997), was also applied. This equation predicts a maximum scour depth of 6 feet, or about the same as the Bormann and Julien (1991) equation. The Schoklitsch equation assumes a vertical drop. The scour depth is calculated from the 100-year water surface drop over Ward Dam, and the same unit flow and D_{90} bed material size as in the Bormann and Julien equation.

The above two equations suggest that the 100-year maximum scour depth at the toe of Ward Dam is about 6 feet. This estimate only applies where the flow jet is two-dimensional. Near the fish ladder wall, scour is expected to be enhanced by the interaction of the jet with the wall and the downstream bank. The depth of scour here cannot be predicted by any of the typical scour equations and a physical model (laboratory study) would be required for an accurate prediction. However, it seems safe to assume that it could be as much as 15 feet during the 100-year flood, potentially exposing the dam toe and the footings for the fish ladder.

Enhanced scour is also expected on the right side of the dam, where the grouted rock joins the dam face. At this site, the 100-year maximum depth in the existing scour hole is estimated to be less than 10 feet. The scour hole is downstream of the dam face, so the depth at the dam toe will be less than the maximum in the scour hole.

5.5.4 Requirement for Scour Protection

The depth of the toe of the downstream face of the dam is not known. Based on field observations it appears to be less than about 8 feet near the fish ladder but it may vary across the dam face. Equilibrium scour depths seem to be about 6 feet, or a little less than the toe-down depth along the middle of the dam face but greater at the left and right sides of the dam.

The priorities for scour protection are in the vicinity of the new fish ladder, where complex interactions between the flows over the dam face, walls and banks have enhanced scour in the past and exposed the toe of the dam, and on the right bank where only a small scour hole has formed but where the toe depth of the grouted riprap repair is unknown.

Scour protection may not be needed between these sites but given the uncertainties in the scour calculations and in the depth of the toe of the face, it is recommended that a rock apron be added to improve the stability and useful lifetime of the dam.

5.5.5 Design of Scour Protection

The design of the rock apron is based on the size of the rock required for stability at the 100-year peak flow and the top elevation, extent and thickness of the apron. The general goal of the design of the rock apron will be to protect the dam toe from scour while not modifying the downstream riffle.

5.5.5.1 Rock Gradation

There is no standard guidance for calculating a stable bed material size for an apron below a grade control structure. For this report, the stable size was estimated from the scour equations discussed above, by selecting the minimum rock size that resulted in zero scour, with the other geometry and hydraulic characteristics kept constant. For the Bormann and Julien equation, the minimum size was 900 mm (3 feet); for the Schoklitsch equation it was 700 mm (2.3 feet). As discussed above, the bed material sizes calculated from the equations are the D_{90} rather than the median sizes.

Table 5 provides a gradation for the rock apron, based on US Army Corps of Engineers Engineer Manual EM 1110-2-1601 standard gradations (1991; refer to their Table 3-1). The gradation assumes a specific weight of 165 lbs/ft^3 and a maximum size of 3 feet.

Table 5. Computed riprap gradation for scour apron

Gradation (Percent Finer than)	Rock Dimensions and Weight		
	Diameter (ft) [1]	Min Weight (lbs)	Max Weight (lbs)
D_{15}	1.6	150	350
D_{50}	2.0	470	690
D_{100}	3.0	900	2300

1. Equivalent spherical diameter is calculated for the maximum weight from Equation 3-1 in USACE (1991)

As a rough check on the above gradation, the stable stone size for the velocity and depth downstream of the dam was also calculated. At Section 103.28, the HEC-RAS model calculates a 100-year average velocity of 12 feet/sec at a depth of 12 feet. For these conditions, the stable stone size has a diameter of 150 to 200 mm, or about 0.5 to 0.6 feet (Neill 2004). The above analysis is not very appropriate at the toe of the dam because many of the assumptions that is based on do not apply there. However, given that the stable size is much smaller than the proposed D_{50} for the apron it provides some assurance that the riprap apron is appropriately sized.

5.5.5.2 Apron Top Elevation

The riffle crest is at an elevation of about 285 feet, so the maximum elevation of the rock apron was set to 283 feet. The crest of the apron will also have a mild downstream slope of about 1% in order to avoid ponding and potential stranding of fish.

5.5.5.3 Apron Extent

Given the above maximum elevations, the existing geometry of the scour hole will determine the maximum downstream extent of the apron. On the left and right sides of the dam, the apron will extend up the banks to provide protection from erosion.

5.5.5.4 Apron Thickness

The minimum rock thickness for the apron is set to $2*D_{50}$, or 4 feet. Where depths to the existing bed are less than 4 feet, the section will be excavated to meet the above thickness. Excavated bed material will be stored and placed on the top of the rock apron up to a maximum thickness of 6 inches. At some sections, the apron thickness of the rock may be greater than 4 feet, depending on the existing topography along the dam toe and the availability of fill.

5.5.5.5 End Treatments

Scour will occur at the downstream end of the apron where it abuts the existing bed materials and on the left and right banks. The right and left banks downstream of Ward Dam appear to be eroding and, as discussed above, the treatment on the banks will be to extend the existing riprap up the bank at the existing slopes. It was assumed that maximum velocities adjacent to both banks were about 16 feet/sec at the 100-year peak flow, requiring rock with a median size of about 500 mm (1.6 feet). The gradation in Table 5 is coarser than this size but it is also recommended for the bank treatments to avoid ordering multiple gradations. The main difference is that the rock would be placed at a thickness of 3 feet, with an underlying filter fabric.

5.6 Diversion Hydraulics under Project Conditions

The flow into the diversion channel is controlled by a Parshall Flume located about 80 feet downstream of the existing screens. The flume has a 6 foot throat width with an invert elevation of 288.6. For the maximum diversion flow of 50 cfs, the flume will create a backwater elevation of 290.3. The exit weir of the fish ladder is set to 290.4 feet. These elevations are about 0.5 feet lower than the crest of the dam.

Under current operations, LMMWC often diverts all of the streamflow during late summer. A memorandum of understanding is being drafted between LMMWC and CDFW to outline future operations, but at this time no formal agreement exists. The proposed flow control structures will be located on the diversion channel; hence LMMWC will be able to reduce diversion flows and increase flows through the fish ladder or over the dam if required. Flashboards will not be required in the fish ladder to ensure flow requirements are met.

The weir gate at the diversion intake will be set with a bottom elevation of 290.0 feet. It will be adjusted to control flow into the diversion. The bypass pipe will also have a slide gate to allow for adjustment of bypass flows. The fish ladder will pass 100% of the non-diverted streamflow up to about 4 cfs. Above 4 cfs, the fish ladder will pass about 8% of the total streamflow.

Table 6 summarizes the flows into the intake, into the fish ladder and over the dam crest for water surface elevations upstream of Ward Dam at 0.5 foot increments.

Table 6. Flow split between fishway, diversion, and dam crest

Water Surface Elev. At Dam (ft)	Diversion intake		concrete dam		fish ladder		Total Flow
	Flow depth, ft	Flow, cfs	Flow depth, ft	Flow, cfs	Flow depth, ft	Flow, cfs	cfs
289	0.4	5	0.0	0	-	0	5
289.5	0.9	20	0.0	0	-	0	20
290	1.4	40	0.0	0	-	0	40
290.5	1.9	50	0.0	0	0.1	0	50
291	2.4	50	0.1	3	0.6	4	57
291.5	2.9	50	0.6	82	1.1	10	142
292	3.4	50	1.1	214	1.6	21	285
292.5	3.9	50	1.6	394	2.1	37	482
293	4.4	50	2.1	662	2.6	61	773
293.5	4.9	50	2.6	995	3.1	92	1137
294	5.4	50	3.1	1379	3.6	132	1561
294.5	5.9	50	3.6	1805	4.1	182	2037

5.7 Stream Hydraulics under Project Conditions

This section evaluates the impact of the proposed project on local water levels. NHC modified the existing condition HEC-RAS model (NHC 2013) to compute project condition water surface profiles.

Figure 4 (next page) shows water surface profiles for lower and upper limit fish passage flows for pre- and post- project conditions. The WSE profiles for 3 cfs are nearly identical. The WSE profiles for the upper limit passage flow (Q=1,920 cfs) show an increase of 0.3 ft upstream of the dam. The slight increase in water levels from dam modification will not affect the diversion capacity or other infrastructure.

Figure 5 (next page) shows the pre- and post- project condition water surface profiles for the 100-year and 10-year peak flows. The greater height of the fish ladder wall increases water surface elevations upstream of the dam by about 0.3 ft for the 100 year peak flow, and by about 0.25 ft for the 10 year peak flow.

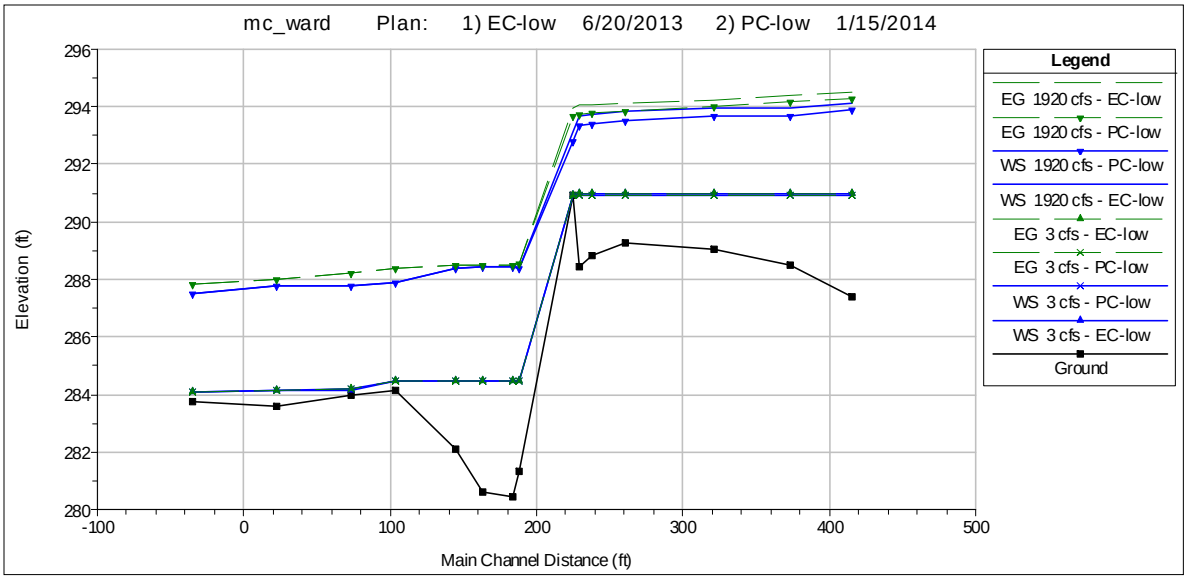

Figure 4: Ward Dam upper and lower fish passage water surface profiles for Existing Condition (EC) and Project Condition (PC).

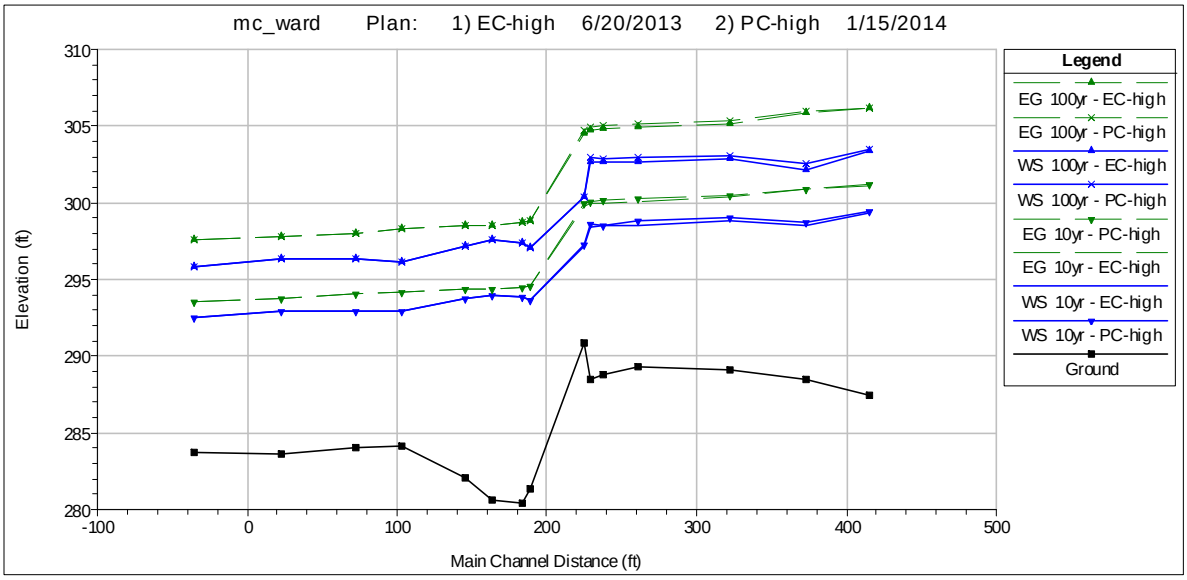

Figure 5: Ward Dam 10- and 100-year water surface profiles for Existing Condition (EC) and Project Condition (PC).

The increase in 100-year water surface elevations from the new fish ladder is relatively minor and the pre- and post- project water surface profiles converge about 200 feet upstream of the dam. These minor local changes in the 100-year water surface profiles do not have significant impact on the performance

of the project or on local infrastructure nor do they increase the area subject to flooding by the 100-year peak flow. Given the lack of impact, the increase in 100-year water surface elevations by the project is acceptable.

6. Project Implementation

The 95% plans and technical specifications are included in Appendix A at the end of this report. The following sections discuss the implementation of the plans. After an initial mobilization, the project work will likely take place in two phases. It is anticipated that instream work will occur during the late summer months when the LMMWC can divert streamflow at Ward Dam. Instream work will include placement of the rock apron, demolition of the existing fish ladder, construction of the fish ladder, construction of the new bypass pipe outlet, and construction of the instream portion of the new diversion intake and the new bank upstream of the diversion. After the diversion season ends in October, the new diversion channel will be constructed, the fish screens will be retrofit, and the new bypass pipe installed.

6.1 LMMWC Constraints on Construction

During the summer instream construction window, LMMWC is required to maintain water deliveries from Ward Dam to downstream users. LMMWC will allow up to three days of no diversion flow, if required, on dates to be negotiated between the contractor and the LMMWC.

6.2 Site Access

Site access to the south (left) bank of Mill Creek at project site will be via Ward Street (Sheet G2). The staging area is proposed for the south bank adjacent to project site. A temporary bridge over the diversion canal for instream construction access will be required. The access route to the dam face across the existing gravel bar downstream of the site will be constructed for trucks and heavy machinery. Some clearing of the vegetation on the floodplain will be required. Access to the right bank will be via the stream channel from left bank after temporary dewatering is in place. Construction mobilization and site access is expected to begin in late July or August.

The contractor will be responsible for developing a traffic and temporary site access plan, including restoring all access roads to the condition prior to construction. LMMWC will be responsible for negotiating access, rights of way, and other issues with local property owners.

6.3 Flow Diversions during Construction

The Instream work is expected to take about 2 months to complete. LMMWC typically diverts about 135 cfs through the summer months, and has the capacity to divert up to about 150 cfs, if required. This allows LMMWC to divert all instream flow upstream of Ward Dam when the flow at the USGS gage is less than about 150 cfs.

Figure 6 shows daily flows for 2011 (an above average water year) and 2014 (below average water year) as well as the average daily flow recorded at the USGS gage at Los Molinos. The figure shows that in an average year, daily flows are less than the LMMWC diversion capacity by early August. Hence, in typical years, the instream work could be completed with all instream flow passing through the LMMWC diversions.

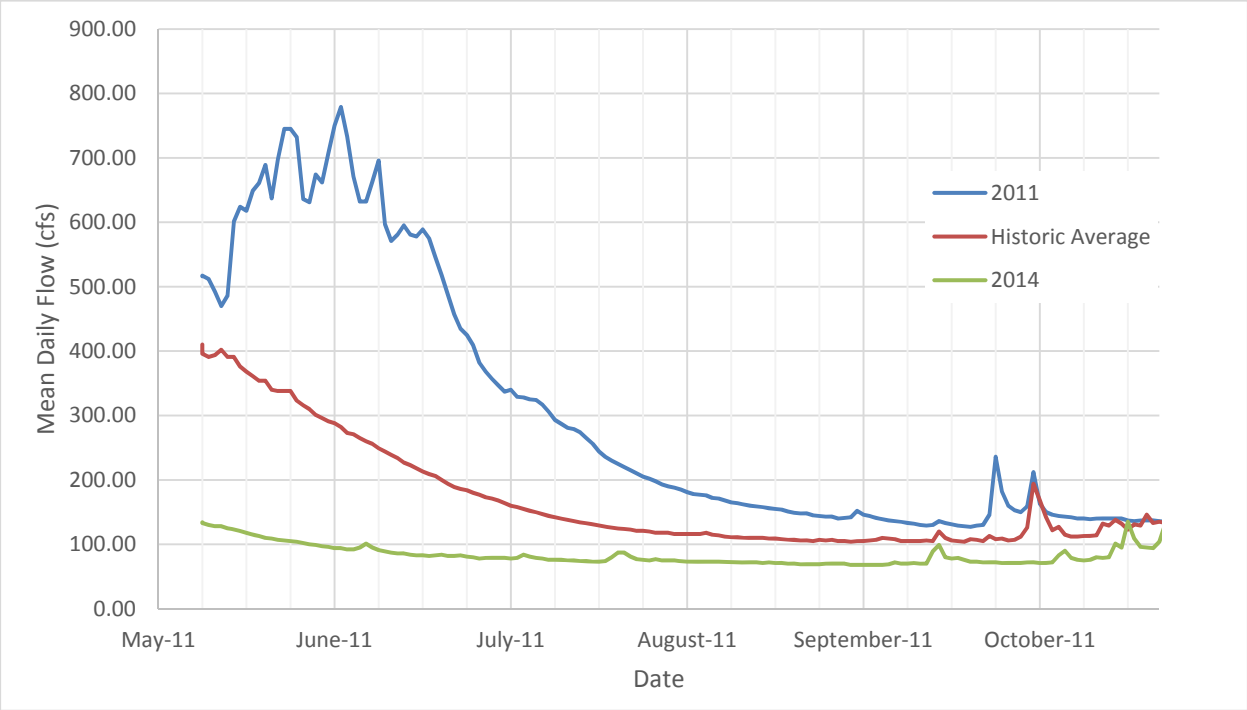

Figure 6. 2011, 2014 and Average daily flows at USGS Gage on Mill Creek

Instream construction of the rock apron is expected to encounter seepage flows from under the dam and de-watering will likely be required. The preliminary plan is to pump construction water onto the left (or right) floodplain so that it infiltrates and returns to Mill Creek as groundwater downstream of the construction site. Permit conditions may require a different approach.

Construction of the new fish ladder and diversion intake will require isolation of the construction areas from water in the reservoir. The isolation structures would likely consist of a water-filled bladder, gravel bags, or other suitable materials and would be placed so that flows will continue to enter the existing Ward Dam diversion. Seepage is anticipated at both sites and construction water will be pumped onto the left floodplain or gravel bar so that it infiltrates and returns to Mill Creek as groundwater downstream of the construction site.

Figure 6 shows that in wet years, such as 2011, flows at the USGS gage remain above the LMMWC diversion capacity until late in September. In such a year, additional bypass capacity will be required to construct the rock apron with no instream flows. It is expected that about 20 cfs to 30 cfs would need to

be routed around the construction. Bladder dams would be used to direct water toward the right bank, allowing construction of most of the rock apron and then moved to the left bank to complete the construction. It may also be practical to divert more flow through the Ward Dam diversion and spill it into Mill Creek further downstream. As discussed above, seepage is expected and pumping of construction water will be required.

The new fish ladder, diversion intake and VRSS bank would be isolated from the reservoir water during construction. During the fish ladder construction, stream flow will pass over the dam crest and it will be necessary to isolate the construction site from these flows also. As discussed above, site dewatering is anticipated during construction.

Design details for diversion and de-watering will be prepared by the contractor to meet the conditions in the environmental documents and permits and submitted to the project owner and engineer for approval.

6.4 Diversion Channel Construction

LMMWC typically reduces their diversion rates during early October. Once the diversion at Ward Dam has been closed for the winter, the improvements to the fish screen and diversion channel can be completed. Some local dewatering is anticipated place near the new diversion intake to allow for finishing of the diversion channel and placement of the new weir gates and trash rack. All other work will take place in the diversion channel and on the bank above. This work is expected to take about two months.

6.5 Re-Vegetation and Mitigation

The 100% submittal also does not include a revegetation plan. After discussions with USFWS and Tehama Environmental Solutions, it was agreed that the lack of certainty about the permit conditions for revegetation meant that this issue was best addressed by a separate set of plans. These plans would be prepared as part of the submissions for permits for this project.

7. Opinion of Probable Cost

7.1 Construction Costs

Table 6 summarizes the probable construction cost for the project based on itemized costs for the project features described in Section 7, assuming a 3% annual inflation rate and construction in 2015. The total cost includes a 10% contingency.

7.2 Total Project Implementation Costs

US Fish and Wildlife Service plans to implement the Ward Dam project in the summer of 2015, with Northwest Hydraulic Consultants acting as the USFWS project engineer, responsible for final

construction drawings, services during bidding, engineering services during construction, and as-built drawings. Table 7 provides a breakdown of the major cost items for implementation.

Table 7: 95% Project Implementation Costs including Contingencies

Item	Description	Cost
1-8	Project Construction (See Next Page)	$633,000
9	Final Contract Documents	$10,000
10	Bid Services	$4,000
11	Engineering Site Services	$50,000
12	Fish Rescue/Relocation	$10,000
13	Wildlife Surveys/Relocation	$10,000
14	Water Quality Compliance Monitoring	$10,000
15	Riparian Habitat Mitigation/Monitoring	$80,000
16	As-built Drawings	$5,000
TOTAL WITH 10% CONTINGENCY		**$892,100**

The estimates for Items 12 through 15 are approximate and will be refined as permit conditions become available.

Northwest Hydraulic Consultants

PROJECT: Mill Creek Fish Passage Improvement - Ward Dam Site (90% Design)

JOB NUMBER: 50655

DESCRIPTION: ENGINEER'S (95% DESIGN PHASE)
OPINION OF PROBABLE CONSTRUCTION COSTS

DATE CREATED:	8/14/2014
DATE UPDATED:	9/16/2014
PREPARED BY:	BGW
CHECKED BY:	
CURRENT YEAR	**2015**
CONSTRUCTION YEAR:	**2015**
ANNUAL INFLATION RATE[1]:	**3.0%**

ITEM NO.	DESCRIPTION	QTY.	UNIT	UNIT PRICE	PROJECTED PRICE [(2)]	TOTAL
	CONSTRUCTION COST ESTIMATE					
1	**MOBILIZATION AND DEMOBILIZATION**	1	LS	$ 57,528	$ 57,528	**$57,528**
2	**SITE PREPARATION**					**$4,310**
	Clear and Grubbing	0.3	AC	$ 500	$ 500	$150
	Site Fencing	990	LF	$ 4	$ 4	$3,960
	Tree Removal	1	EA	$ 200	$ 200	$200
3	**DEWATERING**	1	LS	$ 20,000	$ 20,000	**$20,000**
4	**DEMOLITION**					**$10,800**
	Remove and Dispose of Existing Fish Ladder and Portion of Dam	80	CY	$ 120	$ 120	$9,600
	Remove and Dispose of Existing Headgate and Concrete Wall	10	CY	$ 120	$ 120	$1,200
5	**SCOUR PROTECTION**					**$128,000**
	Stream Channel Grading	750	CY	$ 12	$ 12	$9,000
	Scour apron downstream edge of dam (3-4 Ft Dia Rocks)	1700	TON	$ 70	$ 70	$119,000
6	**FISH LADDER CONSTRUCTION**					**$101,000**
	Foundation Grading	60	CY	$ 20	$ 20	$1,200
	Shoring	130	SY	$ 60	$ 60	$7,800
	Concrete with form work and rebar	115	CY	$ 800	$ 800	$92,000
7	**DIVERSION INTAKE AND CANAL EXTENSION**					**$227,500**
	Foundation Grading	600	CY	$ 12	$ 12	$7,200
	Shoring	130	SY	$ 60	$ 60	$7,800
	Concrete wall extension	120	CY	$ 650	$ 650	$78,000
	Concrete floor (8 inches thick)	35	CY	$ 500	$ 500	$17,500
	Headgate, 120"Wx48"H Slide gate	2	EA	$ 50,000	$ 50,000	$100,000
	Trash Rack	2	LS	$ 6,000	$ 6,000	$12,000
	Access walkway and railing	1	LS	$ 5,000	$ 5,000	$5,000
8	**FISH SCREEN RETROFIT**					**$83,670**
	Fish Bypass Return Pipe	115	LF	$ 120	$ 120	$13,800
	Pipe Excavation/Fill	100	CY	$ 20	$ 20	$2,000
	Clean out Accumulated Sediment	4	CY	$ 100	$ 100	$400
	Concrete Encased Pipe	9	CY	$ 250	$ 250	$2,250
	Excavation for Pipe Entrance	50	CY	$ 12	$ 12	$600
	Shoring	72	SY	$ 60	$ 60	$4,320
	Concrete w/ form work and rebar for Pipe Entrance	38	CY	$ 600	$ 600	$22,800
	Fabricate louver and brackets	1	LS	$ 35,000	$ 35,000	$35,000
	Screen Flow Isolation	1	LS	$ 2,500	$ 2,500	$2,500
	TOTAL CONSTRUCTION COST					**$632,808**
9	**FINAL CONTRACT DOCUMENTS**	1	EA	$ 10,000	$ 10,000	$10,000
10	**BID SERVICES**	1	EA	$ 4,000	$ 4,000	$4,000
11	**ENGINEERING SITE SERVICES**	6	WK	$ 8,400	$ 8,400	$50,400
12	**AS-BUILT DRAWINGS**	1	EA	$ 5,000	$ 5,000	$5,000
					Contingency (10%)	**$63,300**
					SUBTOTAL	**$691,400**
					TOTAL	**$754,700**

Notes:
1. Assumed annual inflation of 3%
2. Projected Price is the unit price multiplied by annual ratio rate

8. References

Bates, K. 1991. Pool-and-Chute Fishways. American Fisheries Society Symposium 10: 268-277.

Bormann, N. and K. Julien. 1991. Scour downstream of grade control structures. Journal of Hydraulic Engineering 117(5): 579-594.

Flosi, G, S. Downie, J. Hopelain, M. Bird, R. Coey and B. Collins. 2010. California Salmonid Stream Habitat Restoration Manual (4th Edition). California. The Resource Agency. Department of Fish and Game. Volumes 1 and 2.

G. Hoffmans and H.J. Verheij. 1997. Scour Manual. Balkema Publishing Co. The Netherlands

National Marine Fisheries Service, Northwest Region. 2011. Anadromous Salmonid Passage Facility Design.

Neill, C.R. (ed). 2004. Guide to Bridge Hydraulics, Second Edition. Thomas Telford Publishing, London. 181 p.

Northwest Hydraulic Consultants (NHC). 2011. Mill Creek Fish Passage, Phase 1: Pre-design Report. Prepared for US Fish and Wildlife Service. December 30, 2012.

Northwest Hydraulic Consultants (NHC). 2013. Mill Creek Fish Passage Phase 1 Alternatives Analysis Report Ward Dam Site.. Prepared for US Fish and Wildlife Service. November 22, 2013.

Sanders & Associates Geostructural Engineering (SAGE). 2011. Geological Reconnaissance Letter. Sent to Mr. Joey Howard of Northwest Hydraulic Consultants and dated December 30, 2011.

US Army Corps of Engineers. 1991 (revised 1994). Hydraulic Design of Flood Control Channels. Engineering Manual EM-1110-2-1601. Washington, DC

Appendix A: 95% Design Plan

SHEET INDEX

COVER SHEET	T1
GENERAL NOTES	G1
ACCESS & DEMOLITION	G2
GENERAL PLAN	C1
FISH LADDER PLAN	C2
FISH LADDER DETAILS	C3
DIVERSION INLET PLAN	C4
DIVERSION INLET DETAILS	C5
JUVENILE BYPASS PIPE DETAILS	C6
FISH SCREEN RETROFIT PLAN	C7
FISH SCREEN RETROFIT DETAILS	C8

LEGEND

EXISTING TREES	
EXISTING PAVED ROAD	
EXISTING GRAVEL ROAD	
EXISTING CONTOURS (MAJOR)	60
EXISTING CONTOURS (MINOR)	61
EXISTING FENCE	
EXISTING EDGE OF WATER (00/00/00)	
EXISTING BUILDINGS & STRUCTURES	
PROPOSED EARTHWORK	
CONSTRUCTION BASELINE	1+00
CONSTRUCTION AREA LIMITS	
PROPOSED CONCRETE	
PROPOSED NATIVE/SOIL MIX FILL	
PROPOSED EXCAVATED AREA	
PROPOSED ROCK SCOUR PROTECTION	
PROPOSED VRSS	
PROPOSED METAL GRATING	

U.S. Department of Interior

Fish & Wildlife Services

CONSTRUCTION PLANS FOR

Mill Creek Fish Passage Improvement Project
Ward Dam Fish Ladder

JANUARY 2015

PROJECT MANAGER

TRICIA PARKER-HAMELBERG
ANTIDROMOUS FISH RESTORATION PROGRAM, NORTHERN SACRAMENTO RIVER
U.S. FISH & WILDLIFE SERVICE, RED BLUFF OFFICE

APPROVED BY:

LOS MOLINOS MUTUAL WATER COMPANY (date)

U.S. Fish & Wildlife Service

Red Bluff Fish & Wildlife Service
10950 Tyler Road
Red Bluff, California 96080
www.fws.gov/redbluff

nhc
northwest hydraulic consultants
3950 industrial boulevard, suite 100c
west sacramento, california 95691-6508
phone: (916) 371-7400 fax: (916) 371-7475
www.nhcweb.com

REGISTERED PROFESSIONAL ENGINEER BRIAN G. WARDMAN No. 74371 Exp: 06/30/15 CIVIL STATE OF CALIFORNIA

PRELIMINARY
NOT FOR CONSTRUCTION

BRIAN G. WARDMAN (date)
CALIFORNIA REGISTERED
PROFESSIONAL ENGINEER NO. #74371
northwest hydraulic consultants

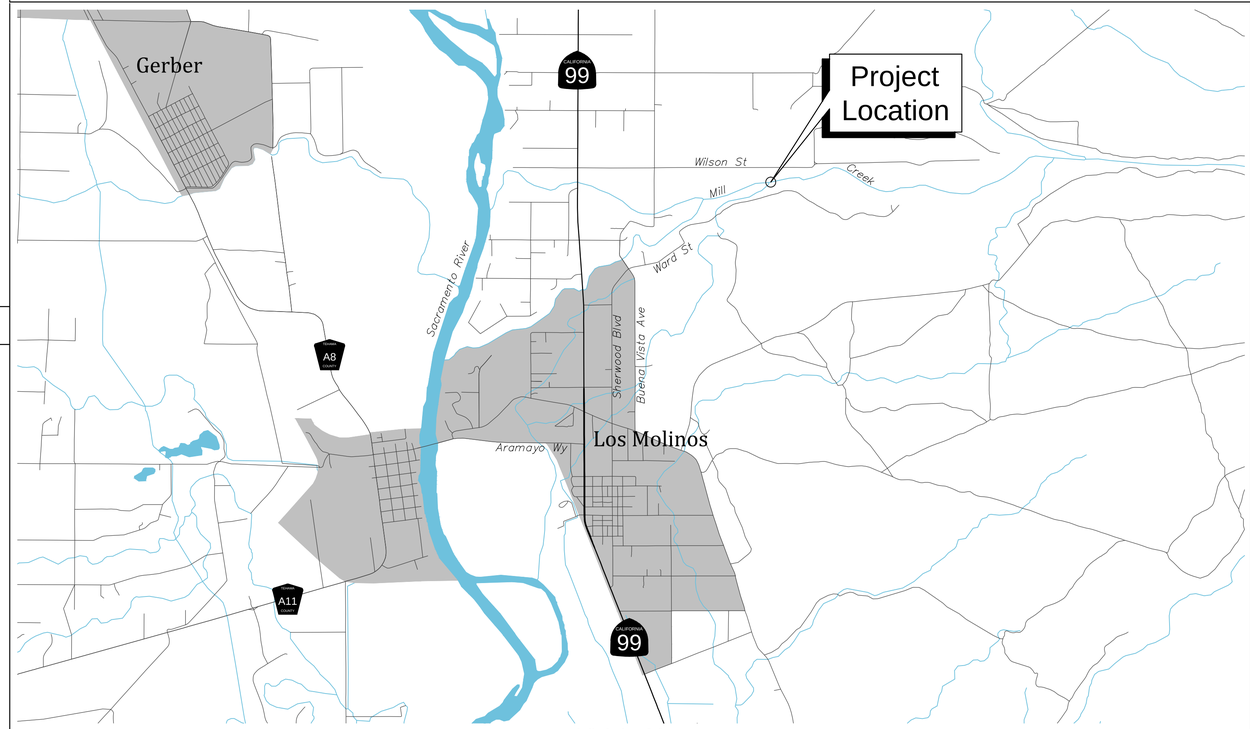

Vicinity Map

Project Location Map

Drawing Name				Date
WARD COVER P:\50655_Mill_Creek_Fish_Passage_Phase_1\AC-50655\dwg				14 January 2015 07:20
Drawing Status	Designer	Drafter	Checked	Job Number
95% Submittal	tvs	tvs	bgw	50655

Sheet 1 of 11

Sheet Number

T1

1. GENERAL

1.1. SUMMARY

1.1.1. THE US FISH AND WILDLIFE, HEREIN REFERRED TO AS THE PROJECT OWNER, WILL DESIGNATE A REPRESENTATIVE REFERRED TO HEREIN AS THE ENGINEER, TO OVERSEE THE CONSTRUCTION AND COORDINATE WITH LOS MOLINOS MUTUAL WATER COMPANY, CONTRACTOR AND PERMITTING AGENCIES.

1.1.2. THE WORK WILL BE PERFORMED AT WARD DAM SITE ON MILL CREEK IN TEHAMA COUNTY. THE WORK INCLUDES BUT IS NOT LIMITED TO: EXCAVATION; SPOILS DISPOSAL; SUB-BASE PREPARATION; STRUCTURAL FILL PLACEMENT; FORMING, PLACING, AND FINISHING PORTLAND CEMENT CONCRETE; FURNISHING AND INSTALLING SCOUR APRON; REVEGETATION; BYPASS PIPE AND SITE CLEANUP AND RESTORATION.

1.1.3. CONTRACTOR SHALL FURNISH ALL LABOR, MATERIAL, EQUIPMENT, AND INCIDENTALS TO COMPLETE ALL WORK ON THE PLANS AND DESCRIBED IN THE SPECIFICATIONS.

1.1.4. THE CONTRACTOR SHALL BE RESPONSIBLE FOR IDENTIFYING AND AVOIDING DAMAGE TO UNDERGROUND UTILITIES. THE CONTRACTOR SHALL LOCATE EXISTING UTILITIES AT LEAST 48 HOURS PRIOR TO EXCAVATION. ANY RELOCATIONS OR TEMPORARY OUTAGES SHALL BE COORDINATED WITH THE PROJECT MANAGER. IF UTILITY CONFLICTS ARE IDENTIFIED, THE CONTRACTOR SHALL HALT ALL WORK IN THE AREA AFFECTED BY THE UTILITY CONFLICT AND SHALL IMMEDIATELY NOTIFY THE PROJECT MANAGER.

1.1.5. THIS PROJECT IS SUBJECT TO REQUIREMENTS OF PERMITS ISSUED BY VARIOUS REGULATORY AGENCIES. THE CONTRACTOR IS RESPONSIBLE TO UNDERSTAND AND PERFORM ALL WORK IN ACCORDANCE WITH THE REQUIREMENTS OF THE PERMITS. COPIES OF THE PERMITS HAVE BEEN PROVIDED TO THE CONTRACTOR ALONG WITH THESE PLANS AND SPECIAL PROVISIONS. PRIOR TO COMMENCING WORK THE CONTRACTOR SHALL COORDINATE WITH THE PROJECT MANAGER TO VERIFY THE MOST RECENT COPY OF ALL APPLICABLE PERMITS ARE INCLUDED IN THE SPECIAL PROVISIONS.

1.1.6. HORIZONTAL COORDINATES AND ELEVATIONS ARE BASED ON NAD 1983 COORDINATES AND NAVD 1988 VERTICAL DATUM, RESPECTIVELY. CONTROL POINTS SET IN THE FIELD ARE SHOWN ON SHEET C1.

2. TEMPORARY STREAM DIVERSION AND DEWATERING

2.1. SUMMARY

THE CONTRACTOR SHALL FURNISH ALL LABOR, MATERIAL, EQUIPMENT, AND INCIDENTALS FOR ALL WORK REQUIRED TO PROVIDE TEMPORARY STREAM DIVERSIONS AND ANY DEWATERING ACTIVITIES NECESSARY TO PERFORM THE WORK.

2.2. SUBMITTALS

2.2.1. CONTRACTOR SHALL PROVIDE A STREAM DIVERSION AND DEWATERING PLAN THAT DESCRIBES THE MATERIALS AND METHODS TO BE USED TO INSTALL AND MAINTAIN STREAM DIVERSIONS. THE PLAN SHALL OUTLINE THE SEQUENCE OF WORK AND THE METHODS FOR DEWATERING AND REWATERING THE CREEK.

2.2.2. NO WORK SHALL OCCUR UNTIL THE PLAN IS APPROVED BY THE ENGINEER.

2.3. CONDITIONS AND REQUIREMENTS

2.3.1. THE WORK WILL BE CONSTRUCTED WHEN RIVER FLOWS ARE GENERALLY LOW. DURING CONSTRUCTION, LOS MOLINOS MUTUAL WATER COMPANY (LMMWC) CONTROLS RELEASES TO WARD DAM AT UPPER DAM. THE FLOW RELEASES ARE DIVERTED AT WARD DAM. LMMWC WILL TYPICALLY DIVERT ALL OF THE REMAINING STREAMFLOW AT WARD DAM DURING LATE SUMMER. THE CONTRACTOR WILL COORDINATE WITH LMMWC TO DETERMINE FLOWS FOR TEMPORARY DIVERSIONS AND TO MAINTAIN THE DIVERSION FLOWS AT WARD DAM. IN THE EVENT THAT THE FLOW IS FORECASTED TO RISE ABOVE THE WARD DAM DIVERSION CAPACITY DURING THE CONSTRUCTION PERIOD, THE ENGINEER MAY REQUIRE THE WORK TO BE HALTED (EXCEPT FOR THE INSTALLATION AND MAINTENANCE OF CONSTRUCTION BMPS) AND THE TEMPORARY STREAM DIVERSIONS TO BE REMOVED. IN THE EVENT THAT WORK IS RESUMED, RE-INSTALLATION OF TEMPORARY STREAM DIVERSIONS WILL BE PAID FOR AS EXTRA WORK.

2.3.2. DEWATERING OF EXCAVATIONS (SEEPAGE PUMP) MAYBE REQUIRED TO ACHIEVE WORKABLE GROUND CONDITION TO INSTALL MATERIALS CONFORMING WITH THE PLANS AND SPECIFICATIONS.

2.3.3. THE CONTRACTOR SHALL MONITOR THE TEMPORARY DIVERSION DAMS DURING THE COURSE OF THE PROJECT AND MAKE ANY REPAIRS OR REPLACEMENTS NECESSARY TO MAINTAIN THE DAMS IN FULLY FUNCTIONING CONDITION. THE ENGINEER MAY REQUIRE THAT WORK BE HALTED WHILE ANY NECESSARY REPAIRS OR REPLACEMENTS ARE MADE.

2.3.4. THE CONTRACTOR SHALL PROVIDE AT LEAST 24 HOURS ADVANCE NOTICE TO THE ENGINEER PRIOR TO REINTRODUCING RIVER FLOWS INTO ANY CONSTRUCTED CHANNEL.

2.3.5. THE LMMWC DIVERSION FLOWS AT WARD DAM MUST MAY BE INTERRUPTED FOR THREE CUMULATIVE DAYS DURING CONSTRUCTION. THE DIVERSION FLOW IS LIKELY TO BE 35 CFS, ALTHOUGH LMMWC COULD DIVERT AN ADDITIONAL 15 CFS OF STREAMFLOW AROUND THE PROJECT SITE.

2.4. PRODUCTS

2.4.1. PRELIMINARY TOP ELEVATIONS ARE SHOWN ON THE PLANS FOR REFERENCE. THE CONTRACTOR SHALL EVALUATE AND SET TOP ELEVATIONS BASED ON SPECIFIC DESIGNS TO BE IMPLEMENTED AND APPROVED BY THE ENGINEER. DAMS MAY BE DESIGNED AS SOLID BARRIERS OR WITH A GATED OPENING TO ALLOW GRADUAL REDUCTION AND INCREASE OF FLOWS.

2.4.2. DAMS SHALL BE CONSTRUCTED USING CLEAN MATERIALS THAT DO NOT POSE A RISK OF SEDIMENT DISCHARGE WHEN INSTALLED OR IF OVERTOPPED. DAMS MAY BE CONSTRUCTED ONSITE USING GRAVEL BAG AND PLASTIC SHEETING MATERIALS, OR MAY BE INSTALLED AS SOLID OR INFLATABLE IMPORTED BARRIERS SUCH AS WATER FILLED DAMS.

2.5. EXECUTION

2.5.1. TEMPORARY DIVERSION DAMS SHALL BE INSTALLED PRIOR TO PERFORMING WORK IN THE CHANNEL.

2.5.2. IF AQUATIC RELOCATION IS REQUIRED BY PROJECT PERMITS, CONTRACTOR SHALL ACCOMMODATE AQUATIC RELOCATION ACTIVITIES TO BE PERFORMED BY OTHERS AS DIRECTED BY THE ENGINEER.

2.5.3. DIVERSION DAMS MAY BE INSTALLED ON THE STREAMBED OR BY EXCAVATING BELOW STREAM GRADE AFTER AN INITIAL DIVERSION AND ISOLATION OF THE CHANNEL HAS BEEN COMPLETED.

2.5.4. DIVERSION DAMS SHALL BE COMPLETELY REMOVED AFTER COMPLETION OF CONSTRUCTION AND AREA RESTORED.

3. TEMPORARY CONSTRUCTION BMPS

3.1. SUMMARY

3.1.1. THE CONTRACTOR SHALL FURNISH ALL LABOR, MATERIAL, EQUIPMENT, AND INCIDENTALS FOR ALL WORK REQUIRED TO DEVELOP AND MAINTAIN ADEQUATE TEMPORARY CONSTRUCTION BEST MANAGEMENT PRACTICES (BMPS) TO PROTECT WATER QUALITY AND PREVENT EROSION, AS SPECIFIED IN PROJECT PERMITS, AND AS SHOWN ON THE PLANS.

3.2. CONDITIONS AND REQUIREMENTS

3.2.1. THE CONTRACTOR SHALL COMPLY WITH APPLICABLE PERMIT PROVISIONS IN THE REFERENCED PERMITS FOR THE PROJECT TO PROTECT WATER QUALITY AND PREVENT EROSION.

3.2.2. MATERIAL STORAGE WILL BE LIMITED TO STAGING AREAS APPROVED BY THE ENGINEER.

3.2.3. ALL CONSTRUCTION RELATED MATERIAL IMPORTED TO THE SITE SHALL BE CLEAN OR WASHED FREE OF ADHERED SOIL AND DELETERIOUS MATERIAL PRIOR TO FINAL PLACEMENT.

3.2.4. CONSTRUCTION EQUIPMENT SHALL BE INSPECTED FOR LEAKS AND STEAM CLEANED OFF-SITE PRIOR TO DEPLOYMENT. DURING CONSTRUCTION CONTRACTOR SHALL ROUTINELY INSPECT EQUIPMENT FOR LEAKS AND REMOVE ANY LEAKING EQUIPMENT FROM SERVICE UNTIL REPAIRED. CONTRACTOR SHALL MAINTAIN SPILL CLEANUP MATERIALS ONSITE AND RESPOND TO SPILLS AND LEAKS IMMEDIATELY TO CONTAIN AND REMOVE THE POLLUTANTS FROM THE SITE.

3.2.5. EXCAVATION, BACKFILL, AND PLACEMENT OF CONCRETE SHALL BE IN WORK AREAS ISOLATED FROM THE ACTIVE FLOWING CREEK.

3.3. PRODUCTS

3.3.1. CONSTRUCTION FENCING SHALL BE 48-INCH HIGH-DENSITY ORANGE POLYETHYLENE SAFETY FENCING WITH A MESH OPENING OF APPROXIMATELY 1 INCH BY 4 INCHES. FENCING SHALL BE ATTACHED TO STEEL OR WOOD POSTS INSTALLED IN THE GROUND AT LEAST 18 INCHES AND AT A MAXIMUM SPACING OF 12 FEET.

3.3.2. SILT BARRIER SHALL BE AS SHOWN ON THE PLANS WITH A 12-INCH DIAMETER COIR LOG INSTALLED IN A TRENCH ON THE UPSTREAM SIDE OF THE BARRIER,

3.3.3. GRAVEL BAGS SHALL BE MADE FROM A WOVEN GEOTEXTILE FABRIC. GRAVEL SHALL BE CLEAN GRANULAR MATERIAL LARGER THAN 0.25 INCHES.

3.3.4. PLASTIC SHEETING SHALL BE 6 MIL MINIMUM POLYETHYLENE OR APPROVED EQUAL.

3.4. EXECUTION

3.4.1. TEMPORARY CONSTRUCTION BMPS AS REQUIRED BY PROJECT PERMITS SHALL BE INSTALLED PRIOR TO MATERIAL DELIVERY AND CONSTRUCTION ACTIVITIES. NO SITE ACCESS FOR CONSTRUCTION OF THE WORK WILL BE PERMITTED UNTIL TEMPORARY CONSTRUCTION BMPS ARE INSTALLED AND APPROVED BY THE ENGINEER AT EACH DIVERSION SITE.

3.4.2. ADEQUATE PLASTIC SHEETING AND SILT BARRIER MATERIALS SHALL BE ON HAND TO COVER CONSTRUCTION MATERIALS IN THE EVENT THAT PRECIPITATION IS FORECAST. COVERS SHALL BE 6 MIL PLASTIC SHEETING ENCIRCLED WITH A COIR LOG SILT BARRIER AND ANCHORED WITH GRAVEL BAGS. COVERS SHALL BE INSTALLED PRIOR TO PRECIPITATION. IF PRECIPITATION IS FORECAST OVERNIGHT OR OVER A WEEKEND, COVERS SHALL BE INSTALLED AT THE END OF THE WORK DAY.

3.4.3. AT THE COMPLETION OF CONSTRUCTION, TEMPORARY CONSTRUCTION BMPS SHALL BE COMPLETELY REMOVED FROM EACH DIVERSION SITE AND DISPOSED OF BY THE CONTRACTOR.

3.4.4. AREAS DISTURBED BY INSTALLATION OF TEMPORARY CONSTRUCTION BMPS, AND ANY OTHER AREAS DISTURBED BY CONSTRUCTION ACTIVITIES, SHALL BE LIGHTLY GRADED AND TREATED WITH WOOD CHIPS.

4. CLEARING AND GRUBBING

4.1. SUMMARY

4.1.1. THE CONTRACTOR SHALL FURNISH ALL LABOR, MATERIAL, EQUIPMENT, AND INCIDENTALS FOR ALL WORK REQUIRED TO CLEAR AND GRUB TREES, PLANTS, BUSHES, WOOD, ORGANIC MATERIAL, AND OTHER MATERIALS NOT TO BE INCORPORATED IN THE WORK FROM THE AREA OF GRADING AS SHOWN ON THE PLANS.

4.2. CONDITIONS AND REQUIREMENTS

4.2.1. CLEARING AND GRUBBING OPERATIONS ARE TO BE CONDUCTED IN SENSITIVE AREAS NEAR THE CREEK AND DAMAGE TO EXISTING VEGETATION SHALL BE MINIMIZED. CLEARING AND GRUBBING OPERATIONS ARE SUBJECT TO THE REQUIREMENTS OF THE APPLICABLE PROVISIONS OF PROJECT PERMITS.

4.2.2. LOGS, BRANCHES, ROOTS, PLANTS, ORGANIC MATERIAL, REFUSE, AND OTHER MATERIAL REMOVED SHALL BE DISPOSED OF OFF THE SITE. THE CONTRACTOR IS RESPONSIBLE FOR LOCATING THE DISPOSAL SITE AND OBTAINING PERMISSION FOR DISPOSAL, FOR COMPLYING WITH APPLICABLE LAWS AND REGULATIONS FOR TRANSPORT OF MATERIALS TO BE DISPOSED, AND FOR APPROPRIATE DISPOSAL OF MATERIALS.

4.3. PRODUCTS

4.3.1. TREE WOUND PAINT SHALL BE BITUMINOUS BASED PAINT OF STANDARD MANUFACTURE SPECIFICALLY DESIGNATED FOR USE ON TREE WOUNDS AND CUTS.

4.4. EXECUTION

4.4.1. UTILITIES SHALL BE LOCATED BY UNDERGROUND SERVICE ALERT (USA) PRIOR TO COMMENCING CLEARING AND GRUBBING OPERATIONS AND UTILITIES TO REMAIN SHALL BE PROTECTED.

4.4.2. THE ENGINEER WILL MARK THE TREES TO BE REMOVED IN THE FIELD. TREES TO BE REMOVED SHALL BE FELLED AND CUT FOR TRANSPORT. STUMPS AND ROOTS SHALL BE GRUBBED IN AREAS TO BE GRADED. GRUBBING SHALL REMOVE ROOTS LARGER THAN 3 INCHES IN DIAMETER TO A DEPTH OF AT LEAST 18 INCHES BELOW THE GROUND SURFACE. DEPRESSIONS FORMED BY GRUBBING SHALL BE REGRADED AS PART OF THE WORK OR FILLED WITH NATIVE MATERIAL TO BE FLUSH WITH THE ADJACENT GROUND SURFACE.

4.4.3. TREES AND VEGETATION TO REMAIN SHALL BE PROTECTED. NO GRADING SHALL OCCUR WITHIN 5 FEET OF TREES INDICATED ON THE PLANS AS PROTECTED. MINOR ADJUSTMENTS IN SLOPE STEEPNESS OR LIMITS OF EXCAVATION AND FILL MAY BE REQUIRED TO AVOID GRADING WITHIN 5 FEET OF THESE TREES. PROTECTED TREE LOCATIONS INDICATED ON SHEET G2 ARE TO BE PROTECTED, ALTHOUGH GRADING MAY OCCUR VERY CLOSE TO, OR AROUND, THE TRUNKS. EXCAVATION AND FILL IN THE VICINITY OF TREES SO INDICATED SHALL BE PERFORMED BY HAND, TO THE EXTENT NECESSARY TO AVOID DAMAGE TO THE TREES.

4.4.4. TREES LOCATED NEAR ACCESS ROUTES OR WITH BRANCHES THAT INTERFERE WITH THE WORK SHALL BE PRUNED TO PREVENT DAMAGE BY EQUIPMENT. BRANCHES SHALL BE CUT NEAR THE BOLE OF THE TREE OR ADJACENT BRANCH. CUTS SHALL BE NEATLY MADE, WITHOUT SPLINTERING OR TEARING THE BRANCH. CUTS ON BRANCHES LARGER THAN 1½ INCHES SHALL BE PAINTED WITH AN APPROVED TREE WOUND PAINT.

5. INSTREAM GRADING WORK

5.1. SUMMARY

5.1.1. THE CONTRACTOR SHALL FURNISH ALL LABOR, MATERIAL, EQUIPMENT, AND INCIDENTALS FOR ALL WORK REQUIRED TO CONDUCT INSTREAM GRADING AND OTHER RELATED TASKS DESCRIBED IN THIS SECTION AND AS SHOWN ON THE DRAWINGS. WORK INCLUDED IN THIS SECTION INCLUDES:

5.1.1.1. FIELD LAYOUT OF STRUCTURES AND ADJUSTMENT TO FIELD CONDITIONS;

5.1.1.2. COORDINATION WITH THE OWNER OR OWNER'S REPRESENTATIVE TO MAKE FIELD ADJUSTMENTS TO THE CONFIGURATION OF IN-STREAM STRUCTURES, AS NOTED ON THE DRAWINGS;

5.1.1.3. CONSTRUCTION OF FEATURES AND STRUCTURES, INCLUDING ASSOCIATED EXCAVATION AND BACKFILL; ALSO INCLUDING COORDINATION FOR INSTALLATION OF PLANTINGS/REVEGETATION.

5.1.2. THE CONTRACTOR SHALL HAVE EXPERIENCE IN INSTREAM CONSTRUCTION AND SHALL HAVE EQUIPMENT AND TRAINED PERSONNEL APPROPRIATE TO THE WORK TO BE PERFORMED.

5.1.3. QUALITY ASSURANCE

5.1.3.1. WRITTEN GUARANTEE AGAINST DEFECTS
BEFORE FINAL ACCEPTANCE, THE CONTRACTOR SHALL PROVIDE A WRITTEN GUARANTEE AGAINST DEFECTS RESULTING FROM POOR INSTALLATION OF BIOENGINEERED STRUCTURES TO THE CONTRACTING OFFICER FOR A PERIOD OF 1 YEAR AFTER THE CONTRACTING OFFICER'S ACCEPTANCE OF THE COMPLETED INSTALLATION.

5.1.3.2. RECORD DRAWINGS
THROUGHOUT THE CONSTRUCTION PERIOD, THE CONTRACTOR SHALL KEEP WRITTEN AND PHOTOGRAPHIC NOTES RECORDING CONSTRUCTION EFFORTS AND ANY CHANGES, ADDITIONS, OR DELETIONS FROM THE DRAWINGS. THE CONTRACTOR SHALL BE RESPONSIBLE FOR PREPARING RED-LINED RECORD ("AS-BUILT") DRAWINGS FOR USE BY OTHERS. THE RECORD DRAWINGS SHALL SHOW AS-BUILT CONDITIONS, INCLUDING INFORMATION ON THE CONSTRUCTION OF THE BIOENGINEERED STRUCTURES. THE CONTRACTOR SHALL DRAFT ALL CHANGES ON ONE SET OF BLUELINE DRAWINGS. AT THE CONTRACTOR'S OPTION, THE ORIGINAL CONSTRUCTION DRAWINGS CAN BE PROVIDED BY THE CONTRACTING OFFICER IN ELECTRONIC (AUTOCAD) FORMAT.

5.1.4. ENVIRONMENTAL REQUIREMENTS
SEE "TEMPORARY CONSTRUCTION BMPS" NOTES

5.2. MATERIALS

5.2.1. ROCK
ROCK FOR THE ROCK SCOUR PROTECTION SHALL MEET THE MATERIAL SPECIFICATIONS OUTLINED IN CALTRANS STANDARD SPECIFICATION 72-2 FOR ROCK SLOPE PROTECTION. THE ROCK SHALL BE BE SOUND, DURABLE MATERIAL FREE FROM MAJOR CRACKS OR DEFECTS. ROCK MAY BE QUARRIED FROM EXCAVATION OR FROM BLASTED ROCK. ROCK SHALL BE SUB-ANGULAR OR ANGULAR AND BLOCKY IN SHAPE, AND WITH THE MAXIMUM AXIS DIMENSION NOT MORE THAN TWO TIMES THE MINIMUM AXIS DIMENSION.

ROCK SCOUR PROTECTION GRADATION CHART

ROCK MASS (kg)	PERCENTAGE LARGER THAN ROCK MASS....
1 ton	0-5
½ ton	50-100
200 lb	95-100

5.2.2. FILTER FABRIC
FILTER FABRIC SHALL MEET CLASS 8 FABRIC AS DEFINED IN CALTRANS STANDARD SPECIFICATION 72-2.

5.3. EXECUTION

5.3.1. SITE VERIFICATION OF CONDITIONS THE CONTRACTOR SHALL VERIFY SITE CONDITIONS AT THE LOCATIONS OF GRADING WORK AND IDENTIFY ANY SITE CONDITIONS THAT WOULD REQUIRE MODIFICATIONS TO THE DESIGN. THE CONTRACTOR SHALL VERIFY THAT SUITABLE WATER CONTENT, SOIL, AND OTHER ENVIRONMENTAL CONDITIONS EXIST TO CONDUCT INSTREAM GRADING WORK.

5.3.2. SCOUR APRON THE SCOUR APRON IS INTENDED TO DISSIPATE ENERGY OF THE FLOW PLUNGING OVER THE DAM CREST. SCOUR APRON ROCKS SHALL BE PLACED AND FILLED TO THE ELEVATION SHOWN ON THE SHEET C2 OR AS DIRECTED BY THE ENGINEER.

6. JUVENILE BYPASS PIPE

6.1. SUMMARY

6.1.1. THE CONTRACTOR SHALL FURNISH ALL LABOR, MATERIAL, EQUIPMENT, AND INCIDENTALS FOR ALL WORK REQUIRED TO PLACE THE JUVENILE BYPASS PIPE. THIS WORK INCLUDES THE TRENCH, PLACEMENT, AND FILL OF THE JUVENILE BYPASS PIPE.

6.2. MATERIALS

6.2.0. THE JUVENILE BYPASS PIPE SHALL BE HIGH DENSITY POLYETHYLENE WATER TRANSMISSION AND DISTRIBUTION PIPE WITH OUTSIDE DIAMETER (O.D.) OF 19.5" FOLLOWING THE STEEL PIPE SIZE (IPS) CONVENTION. THE NOMINAL INSIDE DIAMETER (ID) SHALL BE BETWEEN 18.0" AND 18.5". THE PIPE SHALL HAVE A DIMENSION RATION (DR) OF 32.5. STANDARD PIPE LENGTHS SHALL BE 45 OR 50 FOOT WITH PIPE SEGMENTS JOINED BY HEAT FUSION. THE FUSION SHALL INCLUDE THE PEELING REMOVAL OF THE INTERNAL BEAD FORMED BY THE FUSION PROCESS. ALL WELDS AND EDGES SHALL BE SMOOTH AND FREE OF BURNS OR DEFORMITIES. POLYETHYLENE PIPE AND FITTINGS SHALL BE MADE FROM VIRGIN RESINS EXHIBITING A CELL CLASSIFICATION OF PE 345444C AS DEFINED IN ASTM D3359 WITH AN ESTABLISHED HYDROSTATIC-DESIGN-BASIS TO BE PROVIDED WITH SUBMITTAL FOR WATER AT 73 DEGREES F. THE RESIN SHALL BE LISTED BY THE PPI (PLASTIC PIPE INSTITUTE) IN ITS PIPE-GRADE REGISTRY TECHNICAL REPORT (TR) 4, "LISTING OF PLASTIC PIPE COMPOUNDS."

6.2.1. THE PIPE BACKFILL IS DIVIDED INTO THREE ZONES. THE PIPE BEDDING IS DEFINED AS THE PORTION OF THE BACKFILL MATERIAL BETWEEN THE BOTTOM OF THE PIPE AND TRENCH SUBGRADE. THE PIPE ZONE BACKFILL IS DEFINED AS THAT PORTION OF THE TRENCH TO BE FILLED FROM THE PIPE BOTTOM TO 6" ABOVE THE TOP OF PIPE. THE PIPE BEDDING AND PIPE ZONE BACKFILL SHALL BE NATIVE SOILS OR IMPORT, AS REQUIRED, AND SHALL CONFORM TO CALTRANS CLASS 2 AGGREGATE BASE WITH 3/4-INCH MAXIMUM SIZE. THE TRENCH ZONE BACKFILL IS WILL FILL THE TRENCH BETWEEN THE TOP OF THE PIPE ZONE TO THE EXISTING GRADE. THE TRENCH ZONE BACKFILL WILL BE EXCAVATED FROM THE TRENCH.

6.3. EXECUTION

6.3.1. PIPE AND FITTINGS SHALL BE OF THE SIZES INDICATED. CLEAN PIPE INTERIOR OF ALL FOREIGN MATTER BEFORE INSTALLING. PIPE SHALL BE SQUARE CUT WITH FINE TOOTH SAW OR OTHER CUTTER OR KNIFE DESIGNED FOR USE WITH PLASTIC PIPE. REMOVE BURRS BY SMOOTHING EDGES WITH A KNIFE, FILE, OR SANDPAPER. INTERIOR JOINTS MUST BE SMOOTHED BY PEELING THE INTERNAL BEAD CREATED DURING THE THE FUSION PROCESS TO MATCH FACTORY INTERIOR WALL SMOOTHNESS AND REMOVE ANY AND ALL PROJECTIONS. NO GOUGES OR SCRATCHES ON THE INTERIOR OF THE PIPE WILL BE ACCEPTABLE. ANY LENGTH OF PIPE HAVING A GOUGE, SCRATCH, OR OTHER PERMANENT INDENTATION MORE THAN 10 PERCENT OF THE WALL THICKNESS IN DEPTH SHALL BE REJECTED. REPLACE ANY SECTION OF PIPE FOUND TO BE DEFECTIVE OR DAMAGED WITH NEW ACCEPTABLE PIPE. HANDLE PIPE CAREFULLY TO PREVENT GOUGING OR SCRATCHING.

6.3.2. OPEN TRENCH EXCAVATION SHALL BE USED FOR PLACEMENT OF THE JUVENILE BYPASS PIPE. THE BOTTOM WIDTH OF THE TRENCH SHALL BE NO LESS THAN 30" AND NO MORE THAN 42". THE PIPE BEDDING SHALL BE PLACED AND COMPACTED TO 95% MINIMUM RELATIVE COMPACTION. AFTER PLACEMENT OF THE PIPE, THE PIPE ZONE SHALL BE FILLED AT MAXIMUM 8-INCH UNCOMPACTED LIFTS. THE PIPE ZONE SHALL BE COMPACTED TO 95% MINIMUM RELATIVE COMPACTION. THE CONTRACTOR SHALL EXERCISE CARE TO PREVENT DAMAGE TO THE PIPE DURING INSTALLATION AND BACKFILL OPERATIONS. THE TRENCH ZONE SHALL BE FILLED IN LIFTS. THE LIFTS SHALL BE AT MAXIMUM 12-INCHES THICK WHEN UNCOMPACTED, AND COMPACTED TO A MINIMUM 90% RELATIVE COMPACTION.

7. STRUCTURAL STEEL

7.1. SUMMARY

7.1.1. STRUCTURAL STEEL WORK INCLUDES THE PRODUCTION OF THE FISH SCREEN LOUVERS, INSTALLATION OF THE FLOW ISOLATION PLATE ON THE EXISTING SCREEN, AND PRODUCTION AND INSTALLATION OF THE TRASH RACKS. THE CONTRACTOR SHALL FURNISH ALL LABOR, MATERIAL, EQUIPMENT, AND INCIDENTALS FOR ALL WORK REQUIRED IN THE PRODUCTION AND INSTALLATION OF THESE ITEMS.

7.1.2. SUBMITTALS:

7.1.2.1. THE CONTRACTOR SHALL SUBMIT SHOP DRAWINGS FOR APPROVAL 14 DAYS PRIOR TO BEGINNING FABRICATION. SHOP DRAWINGS SHALL INCLUDE THE FOLLOWING:

7.1.2.1.1. SIZES SHAPES WEIGHT OF EACH PIECE AND DIMENSION OF ALL MATERIALS USED.

7.1.2.1.2. FABRICATION DETAILS.

7.1.2.1.3. DETAILS OF ALL WELDED AND BOLTED CONNECTIONS.

7.1.2.2. CERTIFICATIONS: THE CONTRACTOR SHALL SUBMIT MILL TEST REPORTS CERTIFYING THAT THE MATERIAL MEET THE REFERENCE ASTM SPECIFICATIONS:

7.1.2.2.1. STRUCTURAL SHAPES AND PLATES

7.1.2.2.2. BOLTS, NUTS, AND WASHERS

7.1.2.3. SUBMIT WELDER CERTIFICATION PAPERS FOR ALL WELDERS DOING FIELD WELDING, SUBMIT LETTER FROM MANUFACTURER STATING ALL OFFSITE FABRICATION IS DONE BY CERTIFIED INSPECTORS.

7.2. PRODUCTS

7.2.1. SHAPES AND PLATES

7.2.1.1. CHANNELS, ANGLES, AND PLATES-ASTM A36

7.2.1.2. STEEL TUBING-ASTM A500 GRADE B

7.2.1.3. PIPE: ASTM A53, GRADE B

7.2.2. CONNECTIONS

7.2.2.1. BOLTS, WASHERS, AND NUTS: UNLESS OTHERWISE NOTED ON THE PLANS: ASTM F593 AND ASTM 594

7.2.2.2. WELDING-WELDING ROD E70XX PER ANSI/AWS D1.1

7.2.2.3. ANCHOR RODS-ASTM F1553. GRADE 36

7.2.2.4. THREADED RODS- ASTM A307

7.2.3. FINISH

7.2.3.1. HOT-DIP GALVANIZING: GALVANIZE ALL STEEL UNLESS OTHERWISE NOTED ON THE PLANS. GALVANIZE IN ACCORDANCE WITH ASTM A123/123M

7.2.3.2. EPOXY IMPREGNATED PAIN OR POWDER COATING CAN BE USED EN LIEU OF HOT-DIP GALVANIZING. COLOR SHOULD BE APPROVED BY ENGINEER.

7.3. EXECUTION

7.3.1. FABRICATE ALL STRUCTURAL STEEL FABRICATIONS IN ACCORDANCE WITH THE CONTRACT DOCUMENTS AS WELL AS AISC AND AWS SPECIFICATIONS.

7.3.2. STORE MATERIALS IN A CAREFUL AND WORKMANLIKE MANNER SO THAT DAMAGE TO THE MATERIALS EITHER FROM CORROSION OR LOADS IS AVOIDED. STORE WELDING RODS IN ORIGINAL CONTAINERS OR IN ROD ROD OVENS. RODS MUST BE KEPT DRY. WET RODS ARE NOT TO BE USED.

7.3.3. ALL WELDING WHETHER IIN THE FIELD OR THE SHOP MUST BE PERFORMED BY WELDERS CERTIFIED IN THE WELDS AND POSITIONS THAT ARE REQUIRED BY THE PLANS. SPECIAL INSPECTION IS TO BE PROVIDED WHERE REQUIRED.

7.3.4. ALL BOLTS MUST BE TENSION TO THE SNUG-TIGHT CONDITION ONLY.

7.3.5. INSTALL GALVANIZED STRUCTURAL STEEL WITHOUT DAMAGE TO COATING. ANY DAMAGE TO STRUCTURAL STEEL HALL BE REPAIRD BY STRIPPING COATING AND REDIPPING PIECE.

8. TEMPORARY ACCESS

8.1. SUMMARY

8.1.1. THE CONTRACTOR SHALL FURNISH ALL LABOR, MATERIAL, EQUIPMENT, AND INCIDENTALS FOR ALL WORK REQUIRED TO DEVELOP AND MAINTAIN ADEQUATE CONSTRUCTION ACCESS TO THE WORK.

8.1.2. SUBMITTALS

8.1.2.1. CONTRACTOR SHALL SUBMIT A TEMPORARY SITE ACCESS PLAN DESCRIBING METHODS TO BE USED TO ACCESS JOB SITE. THE PLAN SHALL DESCRIBE: THE APPROACH FOR CONSTRUCTION ACCESS TO EACH DIVERSION SITE; TRAFFIC MANAGEMENT METHODS FOR DELIVERY OF MATERIALS AND TRANSFER TO STAGING AND WORK AREAS; INSTALLATION OF TEMPORARY CONSTRUCTION BMPS TO PROTECT SOILS, VEGETATION, AND WATER QUALITY DURING CONSTRUCTION; AND METHODS TO PROTECT VEGETATION AND GROUND SURFACES OUTSIDE THE AREAS OF WORK.

8.1.3. NO WORK SHALL OCCUR UNTIL THE PLAN IS APPROVED BY THE ENGINEER.

8.2. EXECUTION

8.2.1. ANY WORK REQUIRED TO MAKE ACCESS ROADS SERVICEABLE FOR CONSTRUCTION OPERATIONS SHALL BE AT THE CONTRACTOR'S EXPENSE.

8.2.2. THE CONTRACTOR SHALL REPAIR ANY DAMAGE TO EXISTING FACILITIES AND ACCESS ROADS UTILIZED FOR PERFORMANCE OF THE WORK MEET PRE-CONSTRUCTION CONDITIONS.

8.2.3. ANY TEMPORARY FILL USED FOR CONSTRUCTION OF TEMPORARY ACCESS RAMPS SHALL BE PLACED ON PAVING FABRIC AS DEFINED IN CALTRANS STANDARD SPECIFICATION SECTION 88. ALL TEMPORARY FILL AND FABRIC SHALL BE OFF-HAULED AT COMPLETION OF THE PROJECT AT THE CONTRACTOR'S EXPENSE.

U.S. Fish & Wildlife Service
Red Bluff Fish & Wildlife Service
10950 Tyler Road
Red Bluff, California 96080
www.fws.gov/redbluff

nhc northwest hydraulic consultants
3950 industrial boulevard, suite 100c
west sacramento, california 95691
phone: (916) 371-7400
fax: (916) 371-7475
www.nhcweb.com

REGISTERED PROFESSIONAL ENGINEER BRIAN G. WARDMAN No. 74371 CIVIL STATE OF CALIFORNIA Exp: 06/30/15

PRELIMINARY NOT FOR CONSTRUCTION

Revisions

No.	Date	Description

Drawing Information

Date	1 February 2015 (07:19)
Status	95% Submittal
Designer	tvs
Drafter	tvs
Checked	bgw
File Name	WARD BASEMAP
Plotted Scale	0 1/2 1 (19.19:42)

P:\50655_Mill Creek Fish Passage Phase 1\50655dwg

Mill Creek Fish Passage Improvement Project
Ward Dam Facilities

General Notes

Job Number 50655

Sheet Number G1

Sheet 2 of 11

NOTES:
1. THE PHASE 1 IMPROVEMENTS WILL OCCUR PRIOR TO OCTOBER 15. PHASE 2 IMPROVMENTS WILL LIKELY OCCUR AFTER THE DIVERSION SEASON HAS ENDED.
2. INSTREAM WATER LEVELS ARE EXPECTED TO BE 290.0 FT TO 291.5 FT DURING THE PHASE 1 INSTREAM CONSTRUCTION
3. THE LOCAL DEWATERING BARRIERS EXTENTS ARE APPROXIMATE. ACTUAL EXTENTS WILL BE IDENTIFIED BY THE CONTRACTOR BASED ON CONTRACTOR PROPOSED DEWATERING PLAN.
4. THE LOCAL DEWATERING WILL BE PLACED AS NECCESSARY TO IMPLEMENT VARIOUS PROJECT COMPONENTS. THE NUMBER, LOCATION, AND EXTENTS OF THE BARRIERS WILL BE VARIABLE THROUGHOUT THE PHASE 1 IMPLEMENTATION.
5. HORIZONTAL AND VERTICAL CONTROL IS IN LOCAL COORDINATES.

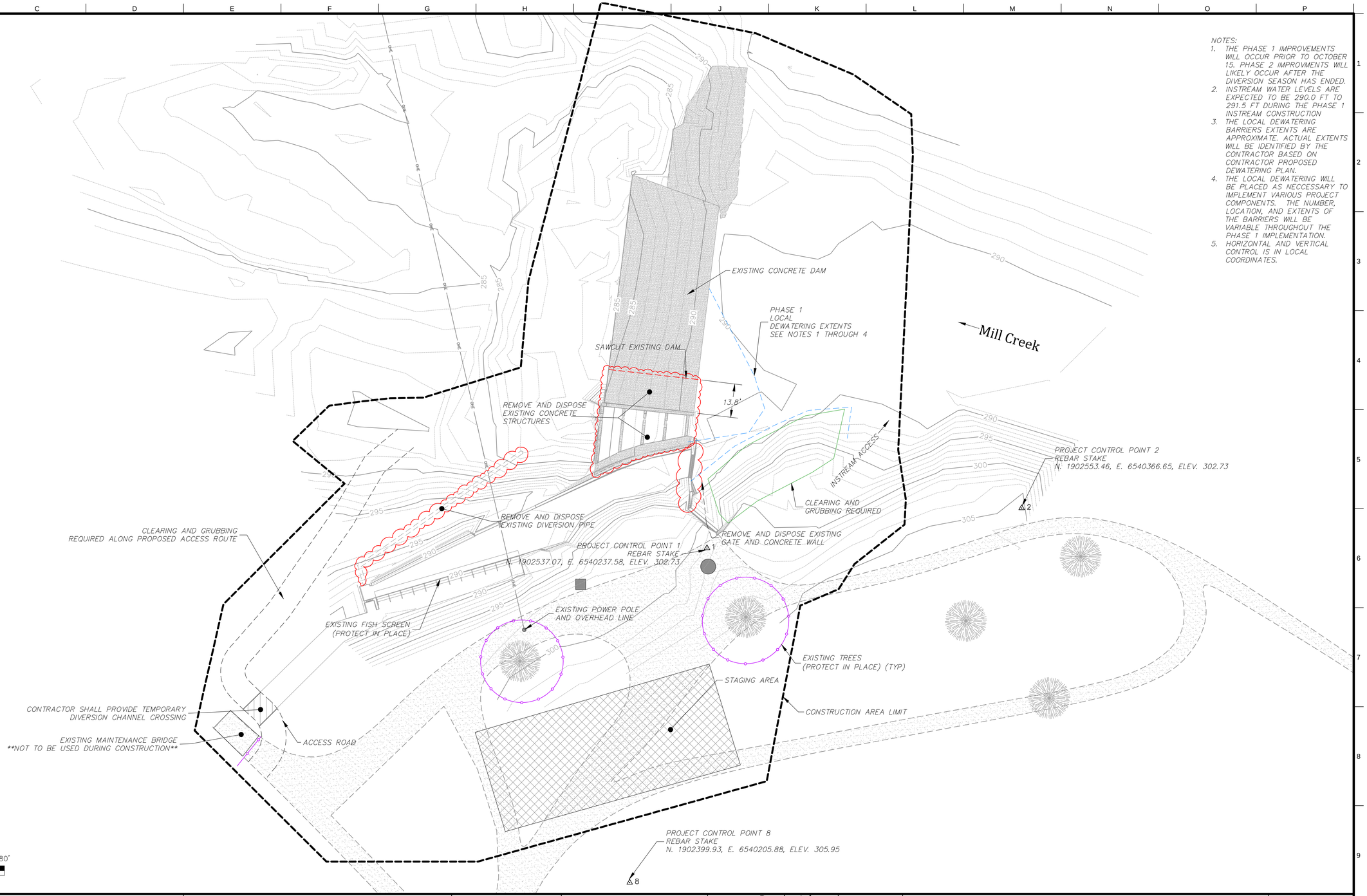

U.S. Fish & Wildlife Service
Red Bluff Fish & Wildlife Service
10950 Tyler Road
Red Bluff, California 96080
www.fws.gov/redbluff

nhc northwest hydraulic consultants
3950 industrial boulevard, suite 100c
west sacramento, california 95691
phone: (916) 371-7400
fax: (916) 371-7475
www.nhcweb.com

REGISTERED PROFESSIONAL ENGINEER BRIAN G. WARDMAN No. 74371 Exp: 06/30/15 CIVIL STATE OF CALIFORNIA

PRELIMINARY
NOT FOR CONSTRUCTION

Revisions		
No.	Date	Description

Drawing Information	
Date	1 February 2015 (07:19)
Status	95% Submittal
Designer	tvs
Drafter	tvs
Checked	bgw
File Name	WARD BASEMAP
Plotted Scale	0 1/2 1 (19:19:42)

P:\50655_Mill Creek Fish Passage Phase 1\C-50655dwg

Mill Creek Fish Passage Improvement Project
Ward Dam Facilities

Access & Demolition

Job Number 50655

Sheet Number

G2

Sheet 3 of 11

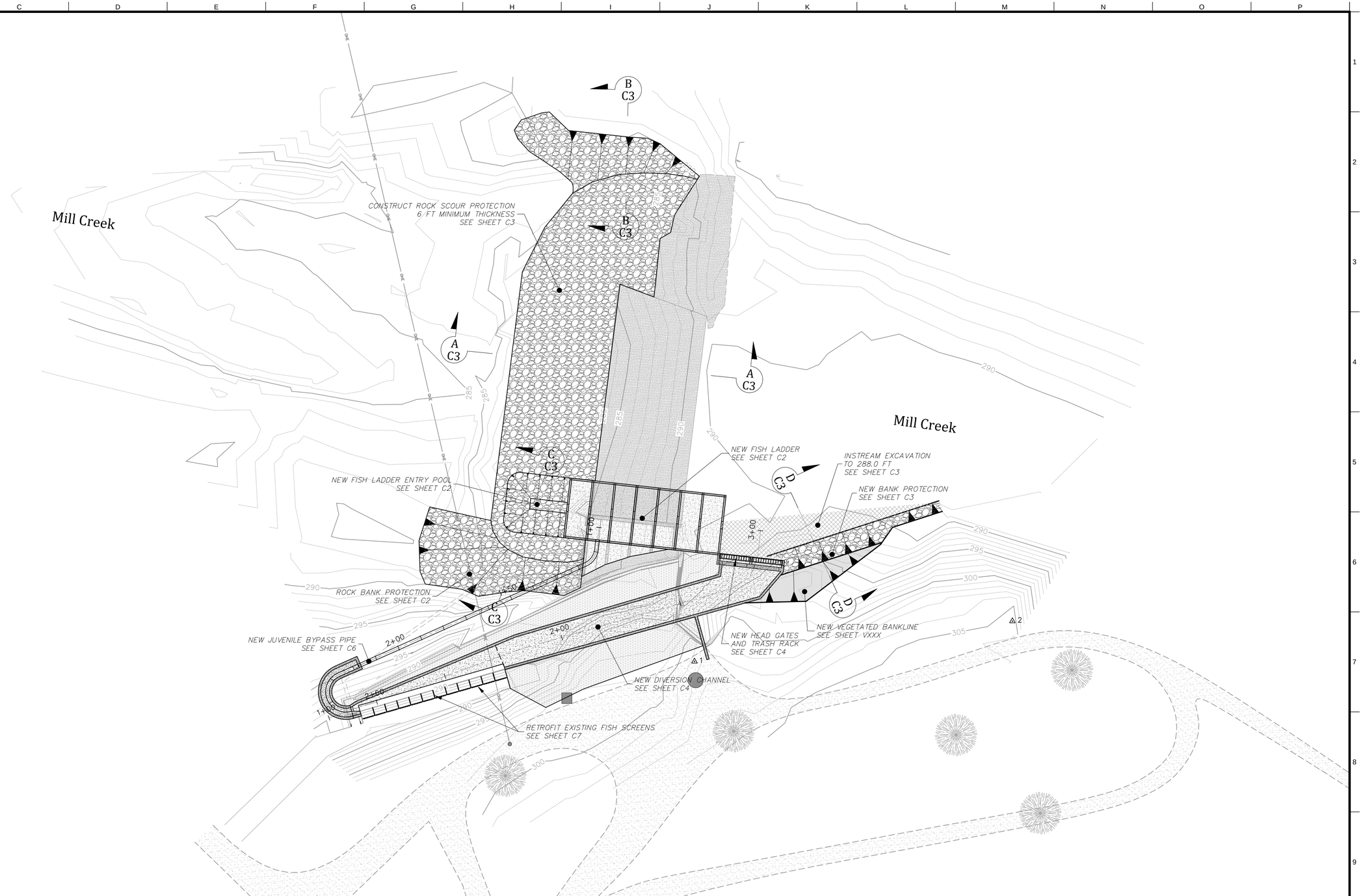

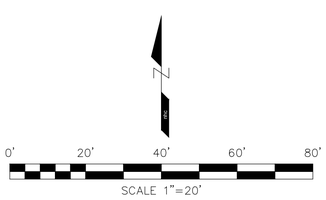

U.S. Fish & Wildlife Service
Red Bluff Fish & Wildlife Service
10950 Tyler Road
Red Bluff, California 96080
www.fws.gov/redbluff

nhc northwest hydraulic consultants
3950 industrial boulevard, suite 100c
west sacramento, california 95691
phone: (916) 371-7400
fax: (916) 371-7475
www.nhcweb.com

REGISTERED PROFESSIONAL ENGINEER
BRIAN G. WARDMAN
No. 74371
Exp: 06/30/15
CIVIL
STATE OF CALIFORNIA

PRELIMINARY
NOT FOR CONSTRUCTION

Revisions		
No.	Date	Description

Drawing Information	
Date	1 February 2015 (07:19)
Status	95% Submittal
Designer	tvs
Drafter	tvs
Checked	bgw
File Name	WARD BASEMAP
Plotted Scale	0 1/2 1 (10:19:43)

P:\50655_Mill_Creek_Fish_Passage_Ph_Rehab_FAR_2005\Dwg\

Mill Creek Fish Passage Improvement Project
Ward Dam Facilities

General Plan

Job Number
50655

Sheet Number
C1

Sheet 4 of 11

U.S. Fish & Wildlife Service
Red Bluff Fish & Wildlife Service
10950 Tyler Road
Red Bluff, California 96080
www.fws.gov/redbluff

nhc northwest hydraulic consultants
3950 industrial boulevard, suite 100c
west sacramento, california 95691
phone: (916) 371-7400
fax: (916) 371-7475
www.nhcweb.com

REGISTERED PROFESSIONAL ENGINEER BRIAN G. WARDMAN No. 74371 Exp: 06/30/15 CIVIL STATE OF CALIFORNIA

PRELIMINARY
NOT FOR CONSTRUCTION

Revisions		
No.	Date	Description

Drawing Information	
Date	1 February 2015 (07:19)
Status	95% Submittal
Designer	tvs
Drafter	tvs
Checked	bgw
File Name	WARD BASEMAP
Plotted Scale	0 1/2 1 (19:19:42)

P:\50655_Mill_Creek_Fish_Passage\Plans\50655dwg

Mill Creek Fish Passage Improvement Project
Ward Dam Facilities

Fish Ladder Plan

Job Number
50655

Sheet Number
C2

Sheet 5 of 11

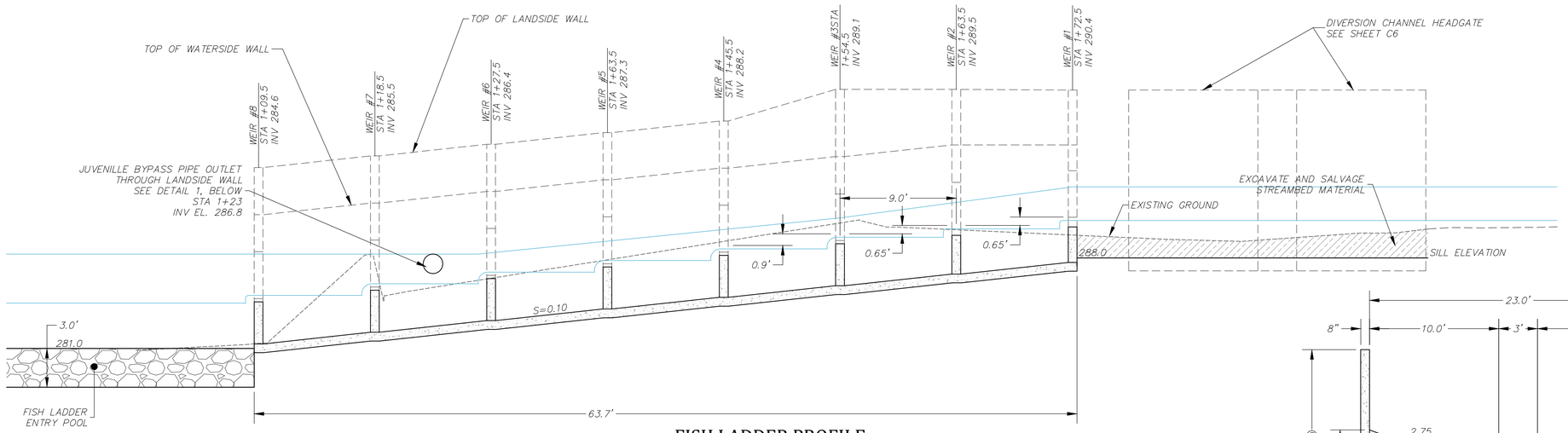

FISH LADDER PROFILE

H: 1"=5' V: 1"=5'

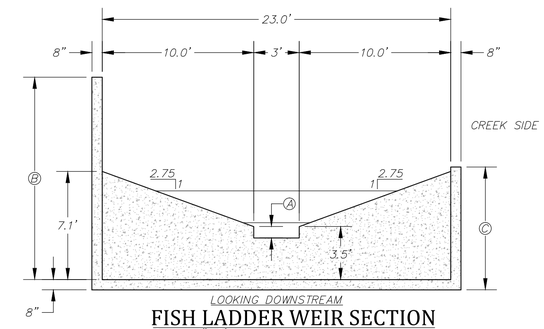

FISH LADDER WEIR SECTION

Scale: 1"=5'

WEIR DIMENSIONS			
WEIR	NOTCH HEIGHT, "A" (FT)	LANDSIDE WALL HEIGHT "B" (FT)	WATERSIDE WALL HEIGHT "C" (FT)
1	0.750	13.400	9.100
2	0.500	14.300	10
3	0.250	15.200	10
4	0.250	13.650	10
5	0.250	13.650	10
6	0.250	13.650	10
7	0.250	13.650	10
8	0.250	13.650	10

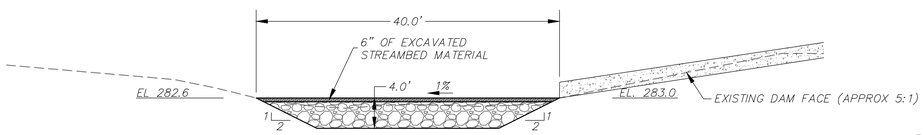

ROCK SCOUR PROTECTION (SECTION A-A)

Scale: 1"=10'

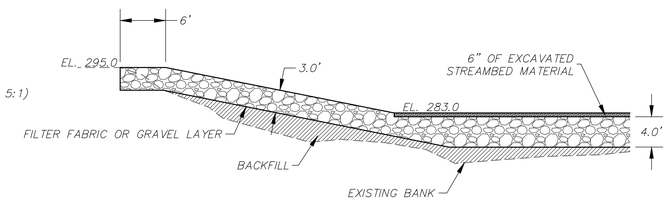

ROCK SCOUR PROTECTION (SECTION C-C)

Scale: 1"=10'

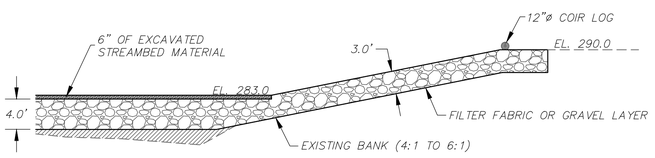

ROCK SCOUR PROTECTION (SECTION B-B)

Scale: 1"=10'

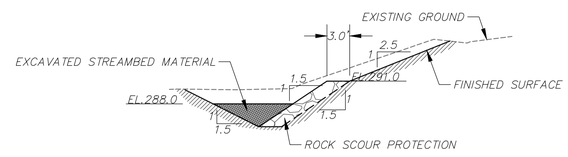

ROCK BANK PROTECTION (SECTION D-D)

Scale: 1"=10'

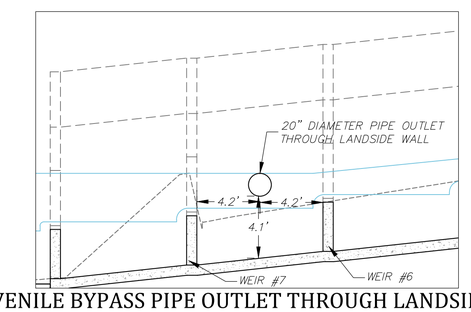

JUVENILE BYPASS PIPE OUTLET THROUGH LANDSIDE WALL

Scale: 1"=5'

U.S. Fish & Wildlife Service
Red Bluff Fish & Wildlife Service
10950 Tyler Road
Red Bluff, California 96080
www.fws.gov/redbluff

nhc northwest hydraulic consultants
3950 industrial boulevard, suite 100c
west sacramento, california 95691
phone: (916) 371-7400
fax: (916) 371-7475
www.nhcweb.com

REGISTERED PROFESSIONAL ENGINEER BRIAN G. WARDMAN No. 74371 Exp: 06/30/15 CIVIL STATE OF CALIFORNIA

PRELIMINARY NOT FOR CONSTRUCTION

Revisions		
No.	Date	Description

Drawing Information	
Date	1 February 2015 (07:19)
Status	95% Submittal
Designer	tvs
Drafter	tvs
Checked	bgw
File Name	WARD BASEMAP
Plotted Scale	0 1/2 1 (8.19:4)

P:\50655_Mill Creek Fish Passage Phase 1\50655dwg

Mill Creek Fish Passage Improvement Project
Ward Dam Facilities

Fish Ladder Details

Job Number 50655

Sheet Number

C3

Sheet 6 of 11

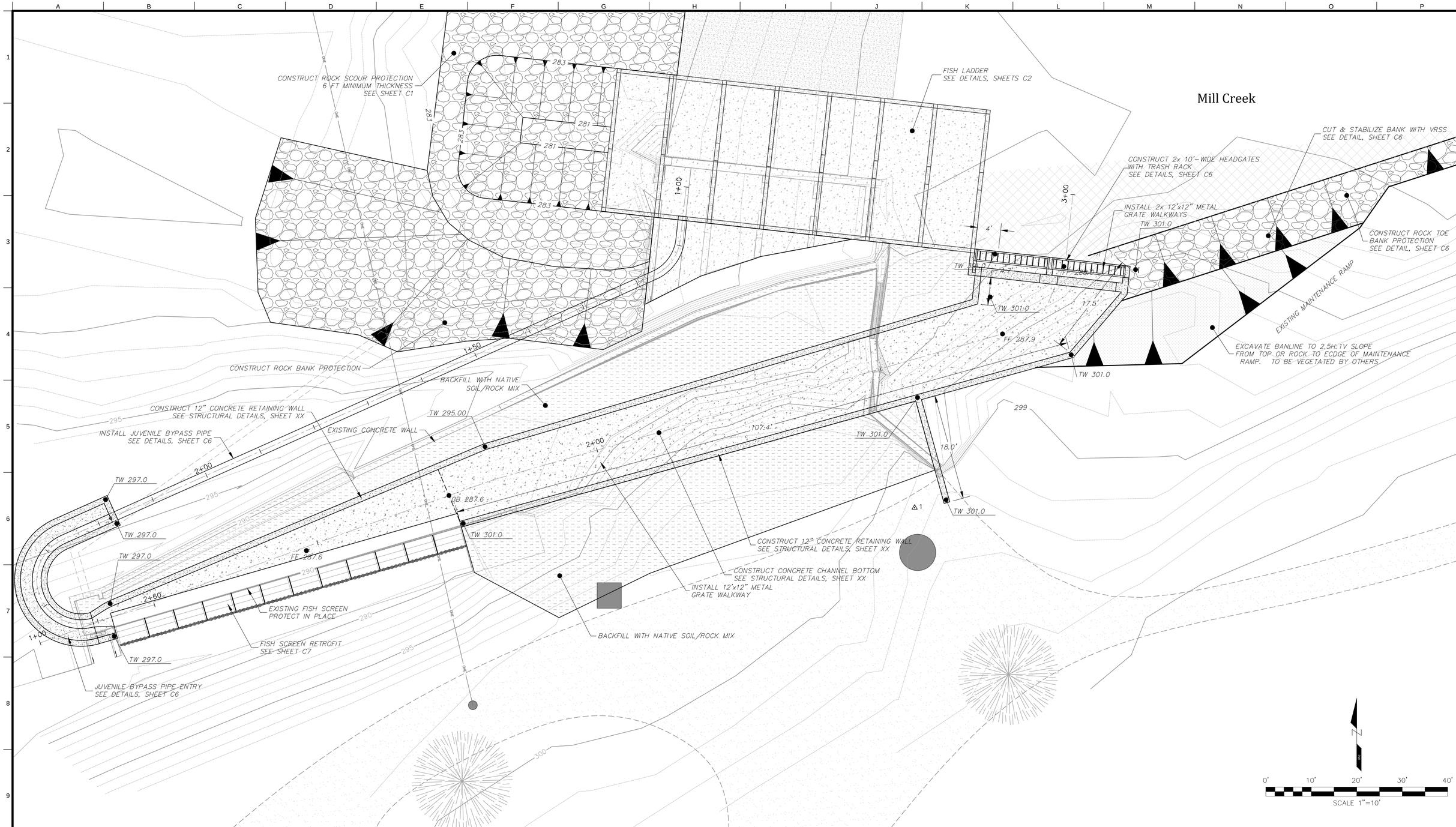

U.S. Fish & Wildlife Service
Red Bluff Fish & Wildlife Service
10950 Tyler Road
Red Bluff, California 96080
www.fws.gov/redbluff

nhc northwest hydraulic consultants
3950 industrial boulevard, suite 100c
west sacramento, california 95691
phone: (916) 371-7400
fax: (916) 371-7475
www.nhcweb.com

REGISTERED PROFESSIONAL ENGINEER BRIAN G. WARDMAN No. 74371 Exp: 06/30/15 CIVIL STATE OF CALIFORNIA

PRELIMINARY
NOT FOR CONSTRUCTION

Revisions		
No.	Date	Description

Drawing Information	
Date	1 February 2015 (07:19)
Status	95% Submittal
Designer	tvs
Drafter	tvs
Checked	bgw
File Name	WARD BASEMAP
Plotted Scale	0 1/2 1 (19:19:42)

P:\50655_Mill Creek Fish Passage_Phase_Fish\50655dwg

Mill Creek Fish Passage Improvement Project
Ward Dam Facilities

Diversion Inlet Plan

Job Number 50655

Sheet Number

C4

Sheet 7 of 11

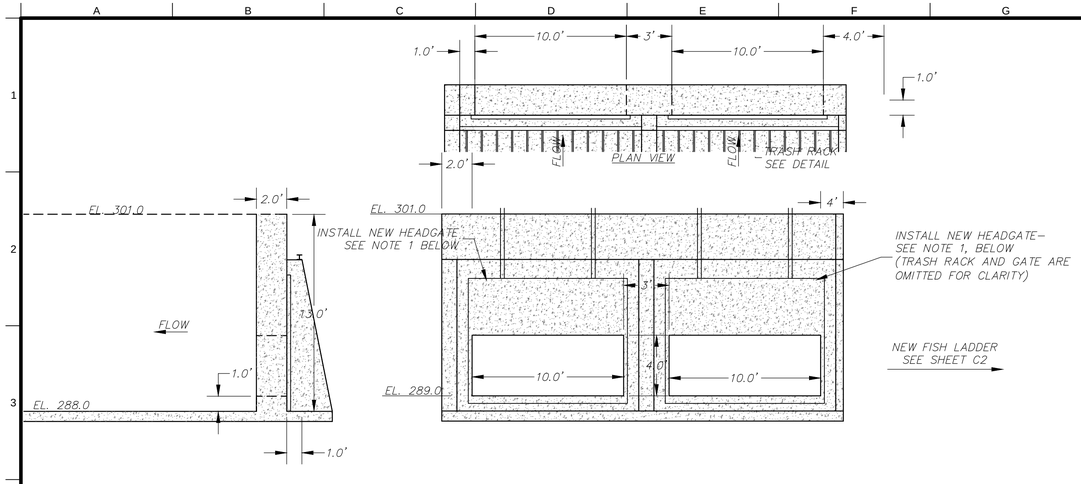

HEADGATE

Scale: 1"=5'

NOTE:
1. INSTALL TWO 120"W X 48"H GOLDEN HARVEST GH–46 STAINLESS STEEL SLIDE GATES OR EQUIVALENT

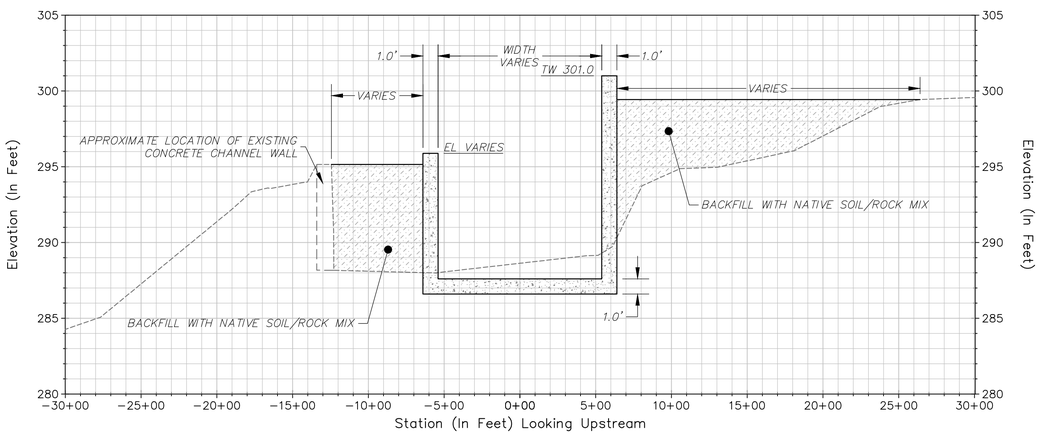

TYPICAL CHANNEL SECTION

Scale: 1"=5"

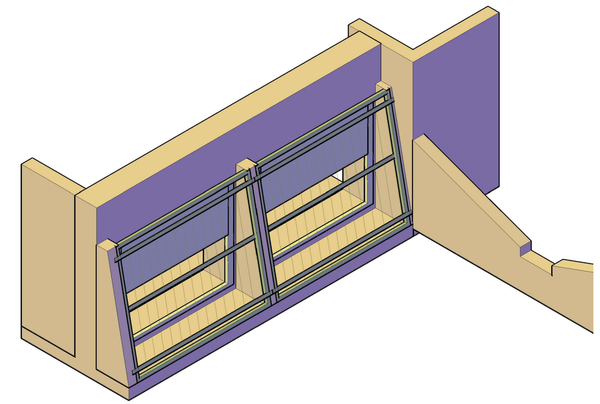

TRASH RACK AND HEADGATE ISOMETRIC VIEW

Scale: 1"=5"

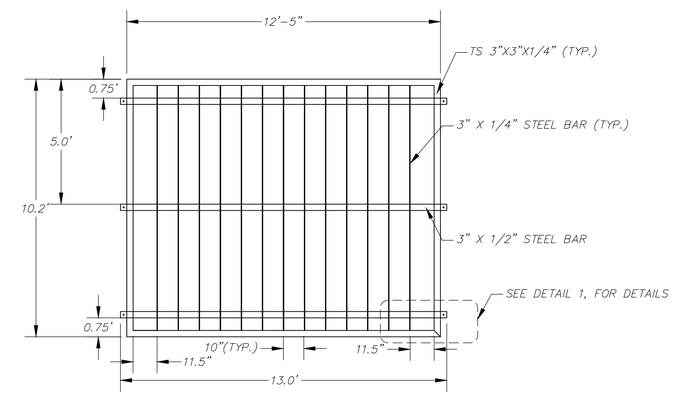

FRONT VIEW TRASH RACK

Scale: 1"=3'

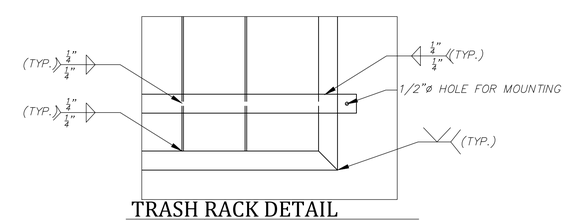

TRASH RACK DETAIL

Scale: 1"=1'

U.S. Fish & Wildlife Service
Red Bluff Fish & Wildlife Service
10950 Tyler Road
Red Bluff, California 96080
www.fws.gov/redbluff

nhc northwest hydraulic consultants
3950 industrial boulevard, suite 100c
west sacramento, california 95691
phone: (916) 371–7400
fax: (916) 371–7475
www.nhcweb.com

REGISTERED PROFESSIONAL ENGINEER
BRIAN G. WARDMAN
No. 74371
Exp: 06/30/15
CIVIL
STATE OF CALIFORNIA

PRELIMINARY
NOT FOR CONSTRUCTION

Revisions		
No.	Date	Description

Drawing Information	
Date	1 February 2015 (07:19)
Status	95% Submittal
Designer	tvs
Drafter	tvs
Checked	bgw
File Name	WARD BASEMAP
Plotted Scale	0 1/2 1 (10:19.43)

P:\50655_Mill Creek Fish Passage\Ward\WARD_2005\Dwgs

Mill Creek Fish Passage Improvement Project
Ward Dam Facilities

Diversion Inlet Details

Job Number 50655

Sheet Number

C5

Sheet 8 of 11

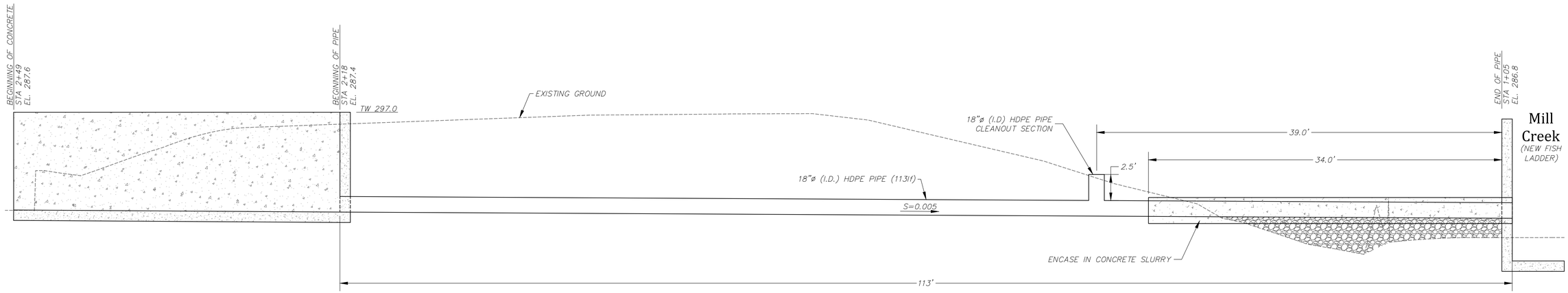

JUVENILE BYPASS PIPE PROFILE

Scale: 1"=5'

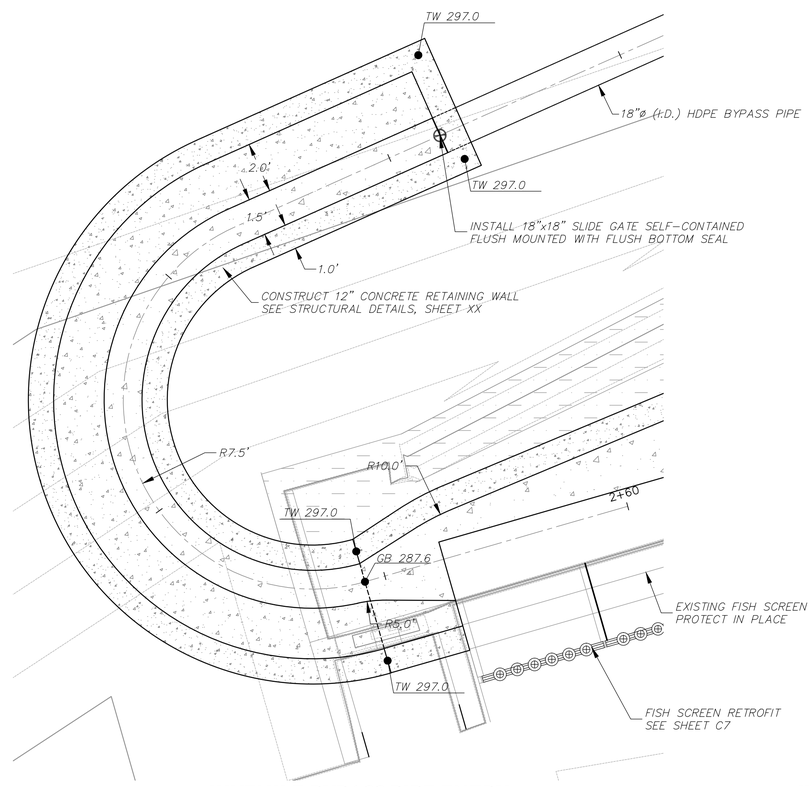

JUVENILE BYPASS PIPE ENTRY

Scale: 1"=3'

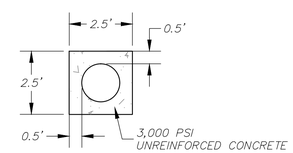

JUVENILE BYPASS PIPE CONCRETE PROTECTION TYPICAL SECTION

Scale: 1"=3'

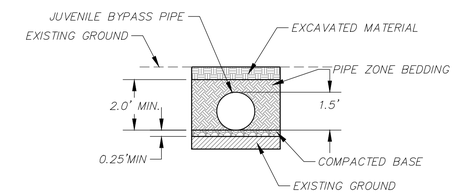

JUVENILE BYPASS PIPE TYPICAL SECTION

Scale: 1"=3'

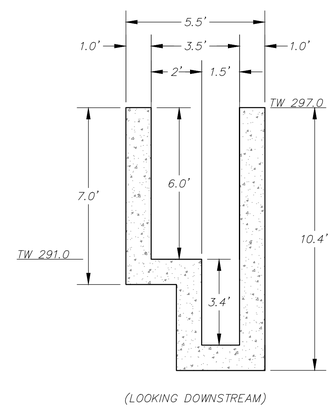

JUVENILE BYPASS PIPE ENTRY TYPICAL SECTION

Scale: 1"=3'

U.S. Fish & Wildlife Service
Red Bluff Fish & Wildlife Service
10950 Tyler Road
Red Bluff, California 96080
www.fws.gov/redbluff

nhc northwest hydraulic consultants
3950 industrial boulevard, suite 100c
west sacramento, california 95691
phone: (916) 371-7400
fax: (916) 371-7475
www.nhcweb.com

REGISTERED PROFESSIONAL ENGINEER BRIAN G. WARDMAN No. 74371 Exp: 06/30/15 CIVIL STATE OF CALIFORNIA

PRELIMINARY
NOT FOR CONSTRUCTION

Revisions		
No.	Date	Description

Drawing Information	
Date	1 February 2015 (07:19)
Status	95% Submittal
Designer	tvs
Drafter	tvs
Checked	bgw
File Name	WARD BASEMAP
Plotted Scale	0 1/2 1 (19.19:4)

P:\50655_Mill Creek Fish Passage_Phase_1\50655dwg

Mill Creek Fish Passage Improvement Project
Ward Dam Facilities

Juvenile Bypass Pipe Details

Job Number 50655

Sheet Number C6

Sheet 9 of 11

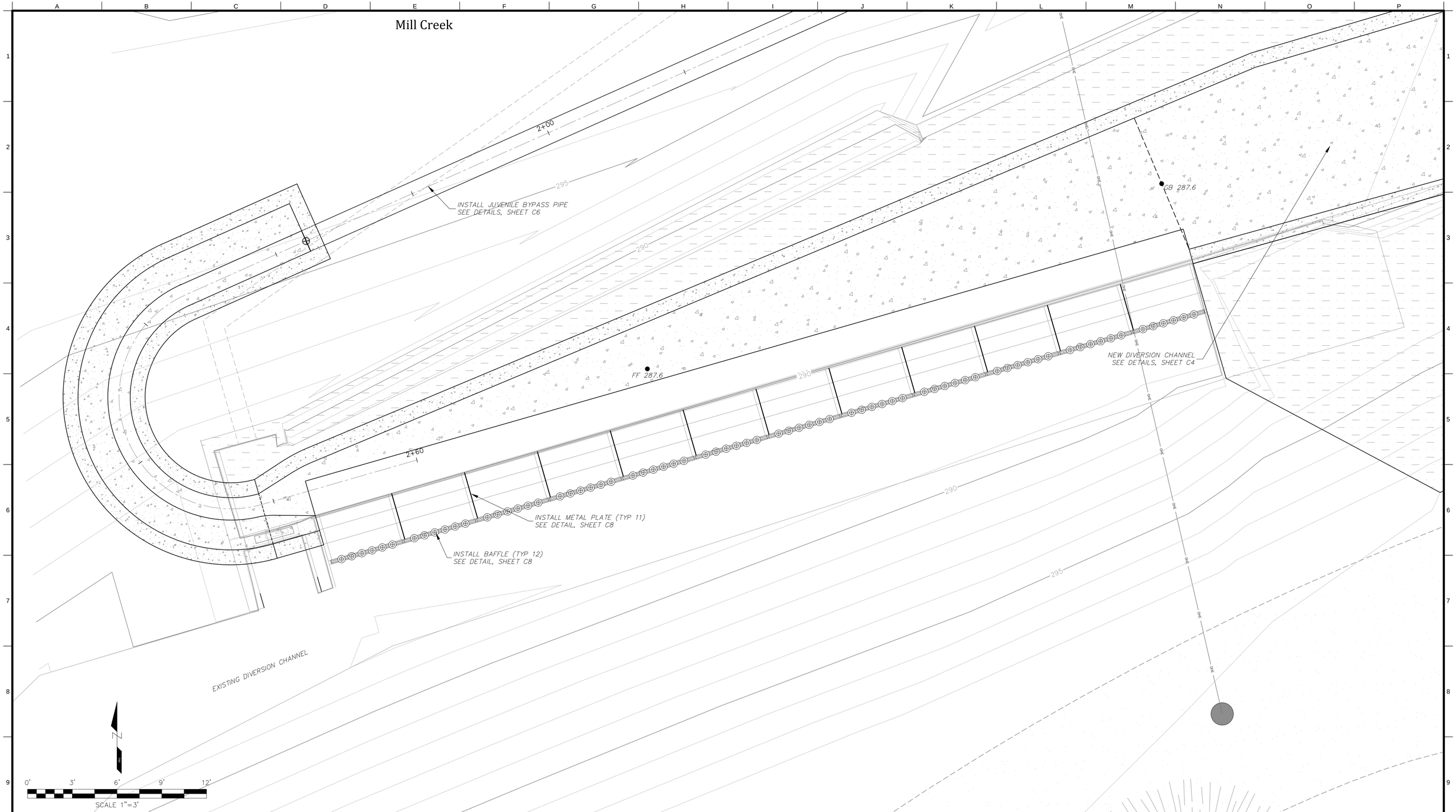

U.S. Fish & Wildlife Service
Red Bluff Fish & Wildlife Service
10950 Tyler Road
Red Bluff, California 96080
www.fws.gov/redbluff

nhc northwest hydraulic consultants
3950 industrial boulevard, suite 100c
west sacramento, california 95691
phone: (916) 371-7400
fax: (916) 371-7475
www.nhcweb.com

REGISTERED PROFESSIONAL ENGINEER
BRIAN G. WARDMAN
No. 74371
Exp: 06/30/15
CIVIL
STATE OF CALIFORNIA

PRELIMINARY
NOT FOR CONSTRUCTION

Revisions		
No.	Date	Description

Drawing Information	
Date	1 February 2015 (07:19)
Status	95% Submittal
Designer	tvs
Drafter	tvs
Checked	bgw
File Name	WARD BASEMAP
Plotted Scale	0 1/2 1 (10:19:43)

P:\50655_Mill_Creek_Fish_Passage_Project_FAC_2005\Dwgs

Mill Creek Fish Passage Improvement Project
Ward Dam Facilities

Fish Screen Retrofit Plan

Job Number
50655

Sheet Number
C7

Sheet 10 of 11

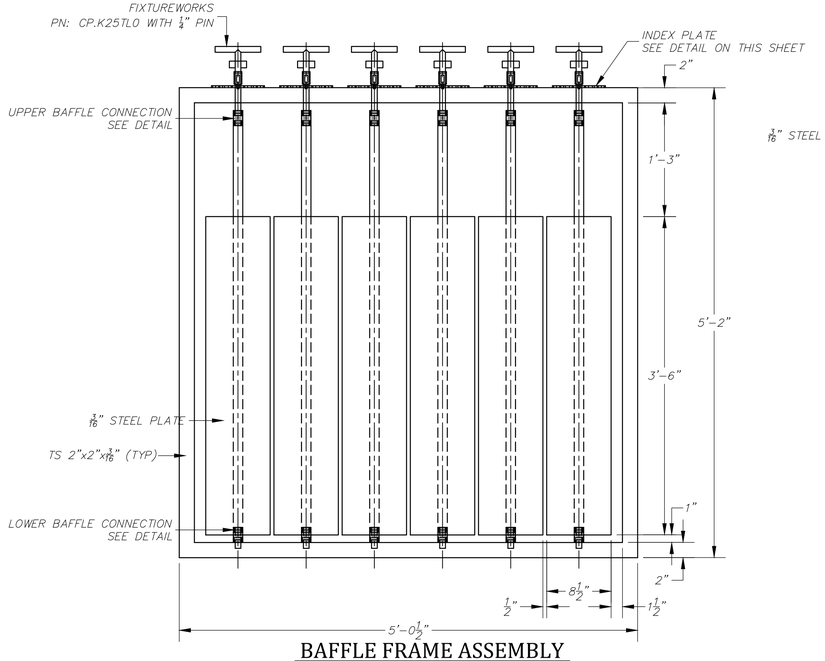

BAFFLE FRAME ASSEMBLY

Not to Scale

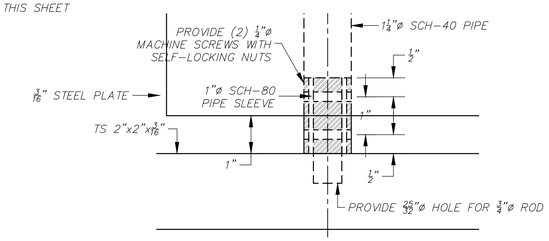

BOTTOM BAFFLE CONNECTION

Scale: 1"=6"

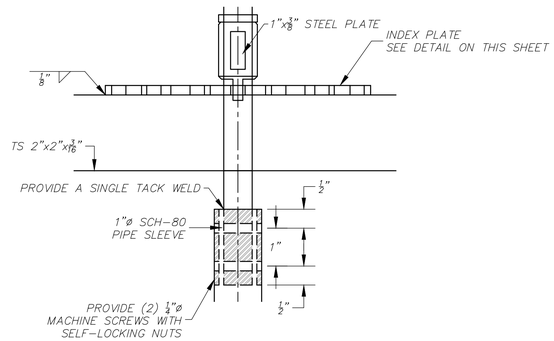

UPPER BAFFLE CONNECTION

Scale: 1"=6"

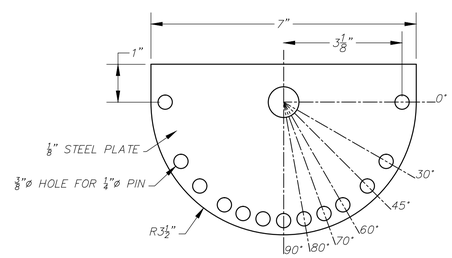

INDEX PLATE

Scale: 1"=6"

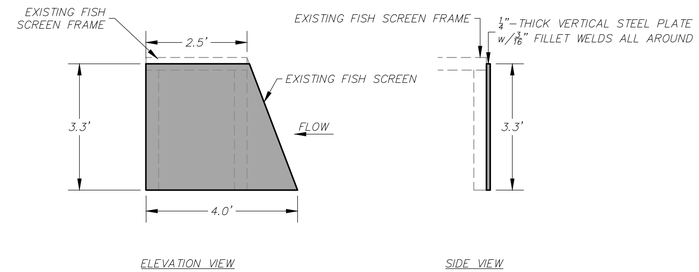

FISH SCREEN RETROFIT STEEL PLATE

Scale: 1"=6"

U.S. Fish & Wildlife Service
Red Bluff Fish & Wildlife Service
10950 Tyler Road
Red Bluff, California 96080
www.fws.gov/redbluff

nhc northwest hydraulic consultants
3950 industrial boulevard, suite 100c
west sacramento, california 95691
phone: (916) 371-7400
fax: (916) 371-7475
www.nhcweb.com

REGISTERED PROFESSIONAL ENGINEER BRIAN G. WARDMAN No. 74371 Exp: 06/30/15 CIVIL STATE OF CALIFORNIA

PRELIMINARY
NOT FOR CONSTRUCTION

Revisions		
No.	Date	Description

Drawing Information	
Date	1 February 2015 (07:19)
Status	95% Submittal
Designer	tvs
Drafter	tvs
Checked	bgw
File Name	WARD BASEMAP
Plotted Scale	0 1/2 1 (1:19.12)

P:\50655_Mill_Creek_Fish_Passage_Phase_1\50655dwg

Mill Creek Fish Passage Improvement Project
Ward Dam Facilities

Fish Screen Details

Job Number
50655

Sheet Number
C8

Sheet 11 of 11

GENERAL NOTES

1. REFER TO CIVIL IMPROVEMENTS PLAN SHEETS FOR INFORMATION NOT SHOWN.
2. THE NOTES PROVIDED ON THESE DRAWINGS DO NOT REPRESENT A COMPLETE DESCRIPTION OF THE WORK TO BE PERFORMED AND ARE INTENDED TO COMPLEMENT THE SPECIFICATIONS. TECHNICAL SPECIFICATIONS ASSOCIATED WITH THIS WORK ARE AS FOLLOWS:
   A. CALTRANS 2010 STANDARD SPECIFICATIONS SECTION 51-1 CONCRETE STRUCTURES.
   B. CALTRANS 2010 STANDARD SPECIFICATIONS SECTION 52 REINFORCEMENT.
   C. CALTRANS 2010 STANDARD SPECIFICATIONS SECTION 90-1 CONCRETE.
3. THE CONTRACTOR IS RESPONSIBLE FOR ALL CONSTRUCTION MEANS AND METHODS.
4. LOCATIONS AND DIMENSIONS OF EXISTING STRUCTURES AND FEATURES ARE APPROXIMATE AND FOR GENERAL REFERENCE ONLY. THE CONTRACTOR IS RESPONSIBLE FOR VERIFYING ALL CONTROLLING DIMENSIONS OF NEW AND EXISTING FEATURES PRIOR TO ORDERING OR FABRICATING MATERIAL OR CONSTRUCTING PROPOSED IMPROVEMENTS. THE CONTRACTOR SHALL REPORT ANY DISCREPANCIES TO THE ENGINEER PRIOR TO PROCEEDING WITH CONSTRUCTION OF THE FEATURE IN QUESTION.
5. PRIOR TO THE START OF CONSTRUCTION, LOCATE ALL EXISTING AND UNDERGROUND UTILITIES IN AND AROUND THE AREAS OF NEW CONSTRUCTION. VERIFY THAT THE PROPOSED CONSTRUCTION DOES NOT CONFLICT WITH EXISTING OR PROPOSED UTILITIES OR THAT APPROPRIATE MEANS ARE PROVIDED FOR REROUTING, SUPPORTING, PROTECTING, OR OTHERWISE INCORPORATING THE UTILITIES INTO THE CONSTRUCTION.
6. NOTIFY THE OWNER AND/OR ENGINEER WHERE A CONFLICT OR DISCREPANCY OCCURS BETWEEN THESE DRAWINGS AND ANY OTHER PORTION OF THE CONTRACT DOCUMENTS OR EXISTING FIELD CONDITIONS.
7. PRODUCTS REFERENCED ON THE DRAWINGS SHALL BE CONSTRUCTED, INSTALLED, AND/OR APPLIED IN ACCORDANCE WITH THE MANUFACTURER'S WRITTEN RECOMMENDATIONS UNLESS OTHERWISE NOTED.
8. DO NOT SCALE DRAWINGS. CONTACT THE ENGINEER FOR ANY DIMENSIONS OR SPECIFIC DETAIL NOT SHOWN..

DESIGN BASIS AND LOADING

1. THE DESIGNS DEPICTED IN THESE DRAWINGS ARE BASED ON INFORMATION PROVIDED IN THE FOLLOWING REFERENCES:
   A. TOPOGRAPHIC BASE MAP PROVIDED BY NORTHWEST HYDRAULIC CONSULTANTS (NHC), DATED APRIL 22, 2014.
   B. 90% DESIGN PLANS, MILL CREEK FISH PASSAGE, WARD DAM FISH LADDER, PREPARED BY NHC, DATED SEPTEMBER 10, 2014.
   C. GEOLOGIC RECONNAISSANCE LETTER, PREPARED BY SAGE ENGINEERS, INC., DATED DECEMBER 30, 2011.
2. DESIGN IS IN ACCORDANCE WITH THE FOLLOWING CODES AND STANDARDS:
   - ACI 318-11, BUILDING CODE REQUIREMENTS FOR STRUCTURAL CONCRETE
3. GEOTECHNICAL DESIGN PARAMETERS:
   - MOIST UNIT WEIGHT: 125 PCF
   - ACTIVE SOIL PRESSURE = 35 PCF
   - PASSIVE SOIL PRESSURE = 150 PCF (SATURATED)
   - ALLOWABLE BEARING: 5-FOOT WIDTH = 3,290 PSF >8-FOOT WIDTH = 4,520 PSF
   - FRICTION COEFFICIENT = 0.38

EXCAVATION

1. NOTIFY UNDERGROUND SERVICE ALERT (USA NORTH) TO IDENTIFY THE LOCATION OF EXISTING UTILITIES AT LEAST 48 HOURS (TWO WORKING DAYS) PRIOR TO ANY EXCAVATION WORK: (800)-227-2600 OR WWW.USANORTH.ORG.
2. STABILITY AND SHORING OF TEMPORARY CUT SLOPES AND TRENCHES SHALL CONFORM TO THE REQUIREMENTS OF CAL-OSHA.
3. EXCAVATIONS SHALL BE KEPT CLEAN AND DRY FOR THE DURATION OF THE WORK PERFORMED.

CONCRETE

1. CONCRETE STRENGTH AND MIX REQUIREMENTS:
   - MINIMUM 28-DAY COMPRESSIVE STRENGTH (f'c) = 3,000 PSI
   - MAXIMUM WATER/CEMENT RATIO = 0.45
   - MAXIMUM AGGREGATE SIZE = 1 ½"
   - CEMENT = ASTM C150 TYPE II
   - EXPOSURE CLASSES:
     FREEZING AND THAWING = F0
     SULFATE = S1
     PERMEABILITY = P0
     CORROSION = C1
2. EXPOSED CONCRETE EDGES SHALL HAVE A ¾" CHAMFER
3. REINFORCING STEEL:
   - DEFORMED REBAR = ASTM A615, GRADE 60 (fy = 60 KSI)
4. REINFORCEMENT SPACING SHOWN IS CENTER TO CENTER OF BARS
5. SECURELY POSITION REINFORCEMENT, EMBEDS, AND DOWELS PRIOR TO PLACING CONCRETE.
6. UNLESS OTHERWISE NOTED, MAINTAIN COVERAGE TO THE FACE OF REBAR AS FOLLOWS:
   - CONCRETE CAST AGAINST EARTH = 3"
   - CONCRETE EXPOSED TO EARTH OR WEATHER:
     #6 THROUGH #18 = 2"
     #5 AND SMALLER = 1 ½"
   - OTHER SURFACES = 1 ½"
7. MINIMUM LAP LENGTHS SHALL CONFORM TO TABLE 1, THIS SHEET.
8. CONSTRUCT CONTROL JOINTS IN VERTICAL CONCRETE RETAINING WALL STEM AT 20' OC.

CONCRETE FOOTING NOTES

1. FOOTING SUBGRADE: USE NATIVE SOIL OR ENGINEERED FILL COMPACTED TO A MINIMUM OF 90% RELITIVE COMPACTION BASED ON ASTM D-1557.
2. IF ENCOUNTERED SUBGRADE CONDITIONS DIFFER FROM THOSE SHOWN IN THE GEOTECHNICAL REPORT, NOTIFY SAGE IMMEDIATELY.
3. CAST TOE FACE OF FOOTING AND KEYWAYS DIRECTLY AGAINST COMPETENT EARTH. OR EXISTING CONCRETE STRUCTURES.

TABLE 1 – TYPICAL DEVELOPMENT/LAP LENGTHS [1]

BAR SIZE	f'c = 3,000 PSI		fy = 60,000 PSI		
	TOP BARS [2]		OTHER BARS		STD HOOKS
	DEV LENGTH Ld (IN)	CLASS B LAP SPLICE (IN)	DEV LENGTH Ld (IN)	CLASS B LAP SPLICE (IN)	DEV LENGTH Ldh (IN)
#3	22	28	17	22	5
#4	29	38	22	29	7
#5	36	47	28	36	8
#6	43	56	33	43	9
#7	63	81	48	63	11
#8	72	93	55	72	12
#9	81	105	62	81	14
#10	91	118	70	91	16
#11	101	131	78	101	17

FOOTNOTES
1. BASED ON ACI 318-11 SECTIONS 12.2.2 AND 12.5.2.
2. TOP BARS SHALL BE DEFINED AS ANY HORIZONTAL BAR PLACED SUCH THAT MORE THAN 12" OF FRESH CONCRETE IS CAST IN THE MEMBER BELOW THE BAR IN ANY SINGLE POUR. HORIZONTAL WALL BARS ARE CONSIDERED TOP BARS.

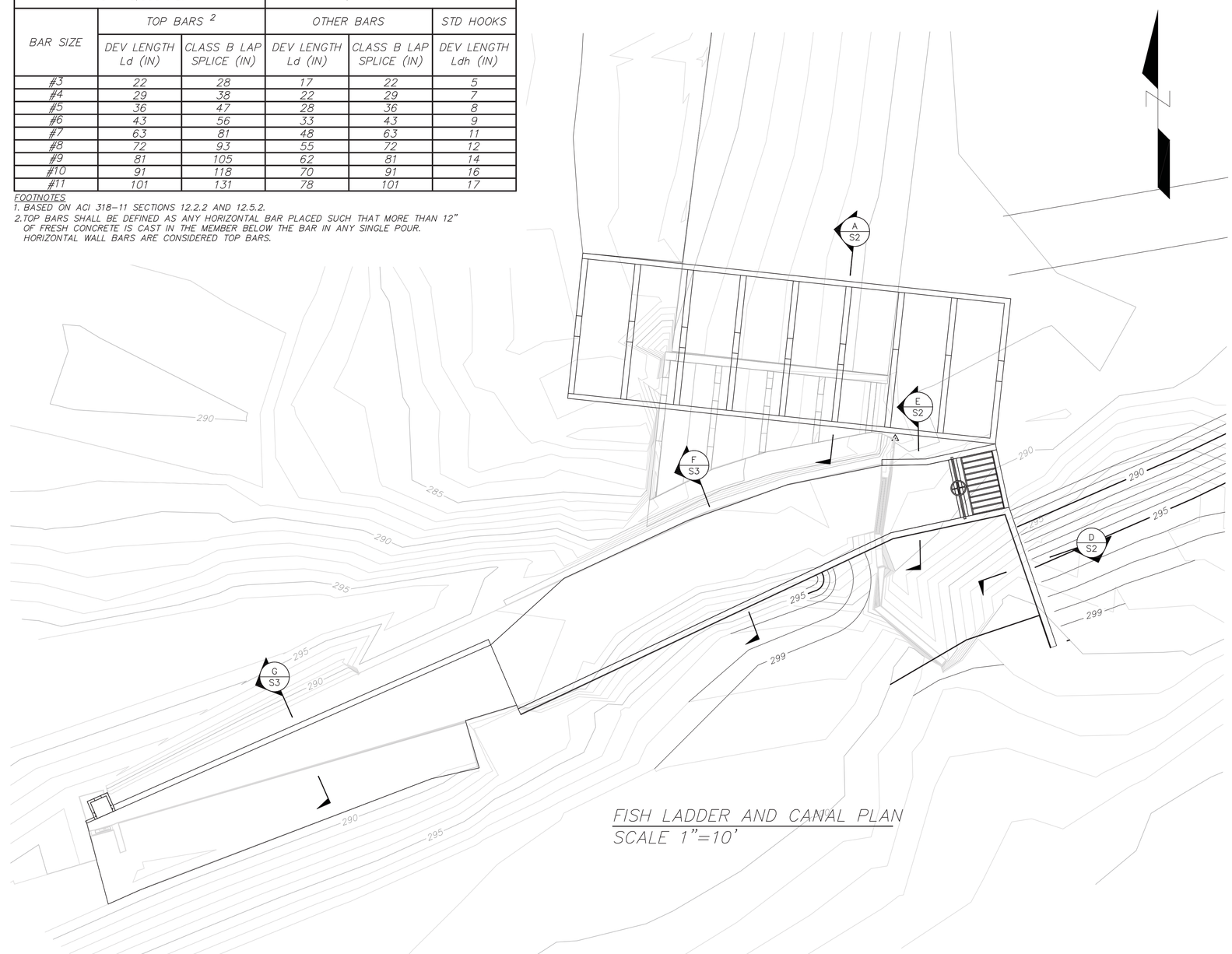

FISH LADDER AND CANAL PLAN
SCALE 1"=10'

90% SUBMITTAL

Client / Agency
U.S. Fish and Wildlife Service
Red Bluff Fish and Wildlife Service
10950 Tyler Road
Red Bluff, California 96080

SAGE ENGINEERS
EARTH • WATER • ENERGY
2251 Douglas Blvd., Ste. 200
Roseville, CA 95661
(916) 677-4800
www.SAGEengineers.com

REGISTERED PROFESSIONAL ENGINEER TRAVIS W. KOCH No. 75422 Exp. 12/31 CIVIL STATE OF CALIFORNIA

PRELIMINARY
NOT FOR CONSTRUCTION

Revisions		
No.	Date	Description

Drawing Information	
Date	28 September 2014 (21:51)
Designer	S. MOOSE
Drafter	L. CHAPMAN
Checked	T. KOCH
File Name	11-018.00-WARD.dwg
Plotted Scale	0 ½ 1

WARD DAM FISH PASSAGE IMPROVEMENT

STRUCTURAL NOTES AND PROPOSED PLAN

Job Number 11-018.00

Sheet Number S1

Sheet 11 of 13

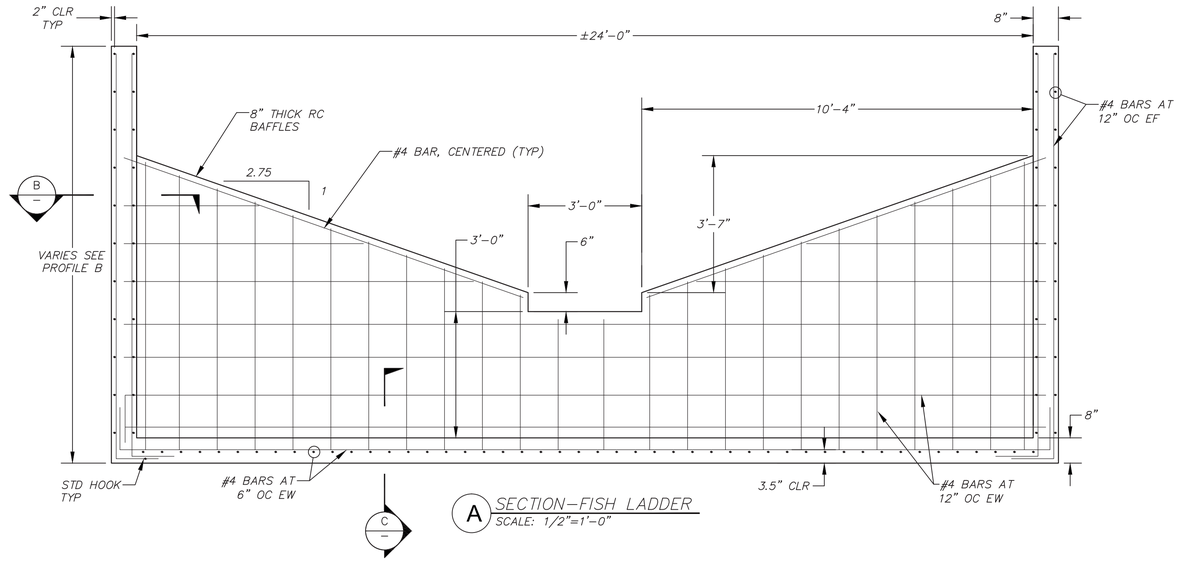

A SECTION–FISH LADDER
SCALE: 1/2"=1'-0"

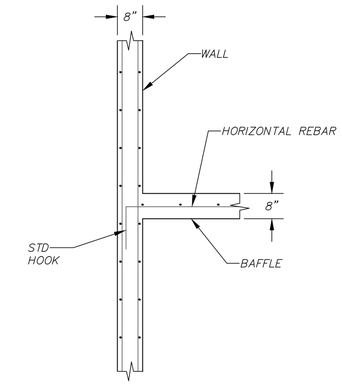

B FISH LADDER CROSS SECTION
SCALE: 1/2"=1'-0"

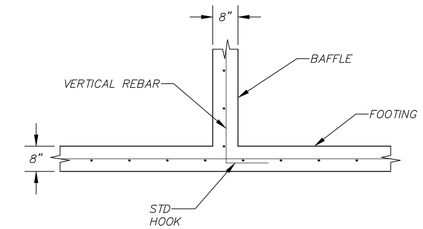

C FISH LADDER CROSS SECTION
SCALE: 1/2"=1'-0"

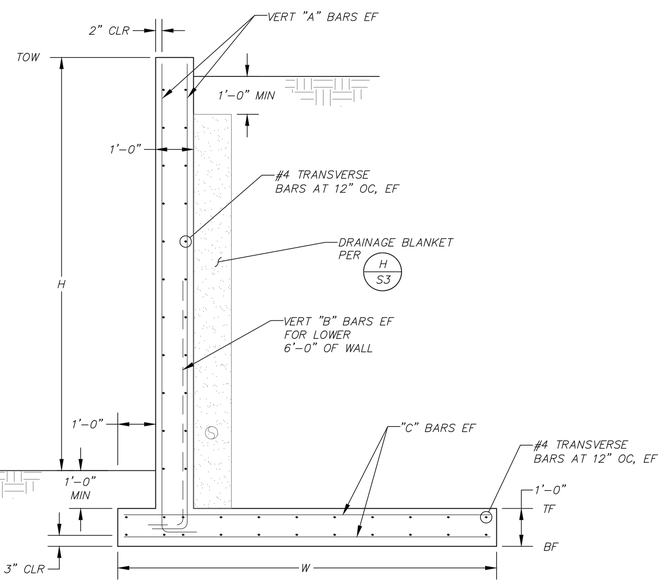

MAX H	STEM		FOOTING	
	"A" BARS	"B" BARS	W	"C" BARS
6'-0"	#4@12"	N/A	5'-0"	#4@12"
11'-11"	#6@12"	#6@12"	10'-0"	#5@6"

D SECTION–CANAL INTAKE RETURN WALL
SCALE: 1/2"=1'-0"

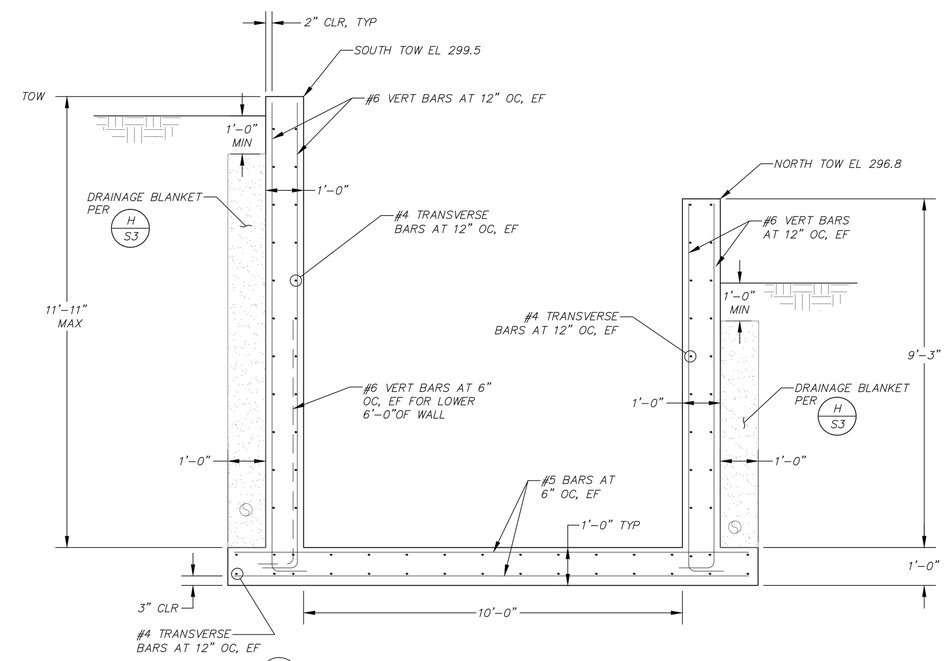

E SECTION – DIVERSION CANAL STA 1+52 TO 1+72
SCALE: 1/2"=1'-0"

90% SUBMITTAL

Client / Agency

U.S. Fish and Wildlife Service
Red Bluff Fish and Wildlife Service
10950 Tyler Road
Red Bluff, California 96080

SAGE ENGINEERS
EARTH • WATER • ENERGY

2251 Douglas Blvd., Ste. 200
Roseville, CA 95661
(916) 677-4800
www.SAGEengineers.com

REGISTERED PROFESSIONAL ENGINEER TRAVIS W. KOCH No. 75422 Exp. 12/31/15 CIVIL STATE OF CALIFORNIA

PRELIMINARY NOT FOR CONSTRUCTION

Revisions		
No.	Date	Description

Drawing Information	
Date	28 September 2014 (21:51)
Designer	S. MOOSE
Drafter	L. CHAPMAN
Checked	T. KOCH
File Name	11-018.00-WARD.dwg
Plotted Scale	0 ½ 1

WARD DAM FISH PASSAGE IMPROVEMENT

STRUCTURAL SECTIONS AND DETAILS

Job Number 11-018.00

Sheet Number S2

Sheet 12 of 13

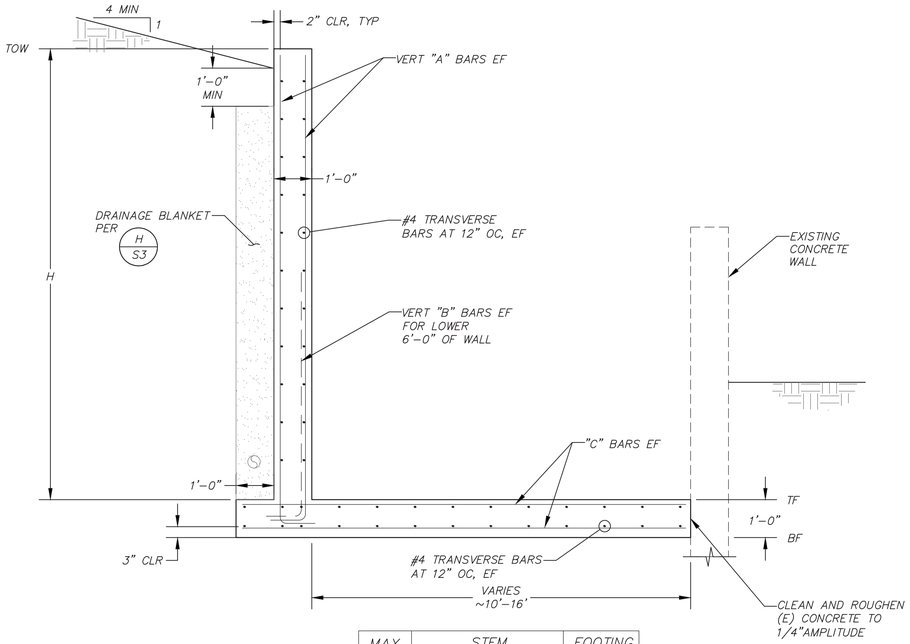

MAX H	STEM		FOOTING
	"A" BARS	"B" BARS	"C" BARS
7'-5"	#4@12"	N/A	#4@12"
11'-11"	#6@12"	#6@12"	#5@6"

F SECTION – DIVERSION CANAL STA 0+80 AND 1+52
SCALE: 1/2"=1'-0"

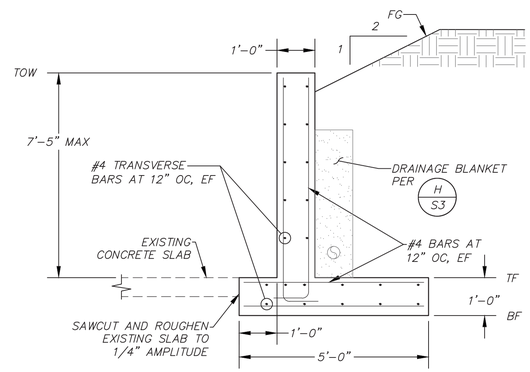

G SECTION – DIVERSION CANAL STA 0+05 TO 0+96
SCALE: 1/2"=1'-0"

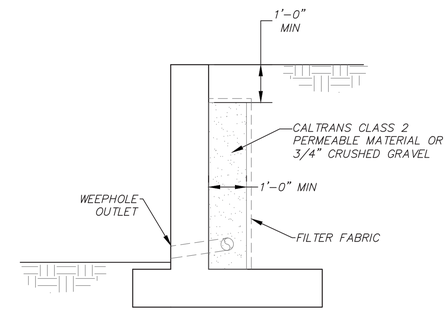

NOTES:
1. PROVIDE 4"ø OUTLETS AT LOW POINTS AND EVERY 50' MIN. LOCATE OUTLETS 12" ABOUVE FINISHED GRADE.
2. SUBDRAIN: 4"ø SDR35 PVC PERFORATED PVC WITH PERFORATIONS FACING DOWNWARD.
3. USE MIRAFI 160N FILTER FABRIC (OR EQUIVALENT) WHEN 3/4 " CRUSHED ROCK IS USED.

H DRAINAGE DETAIL
SCALE: 1/2"=1'-0"

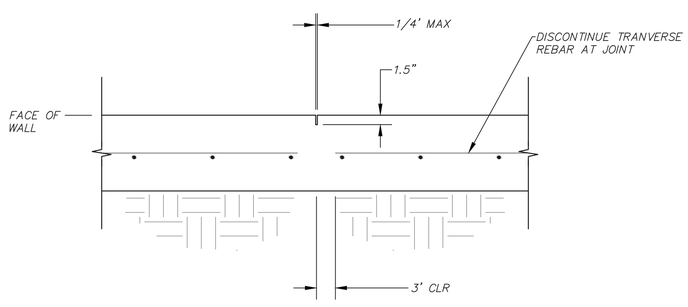

J CONTROL JOINT
NTS

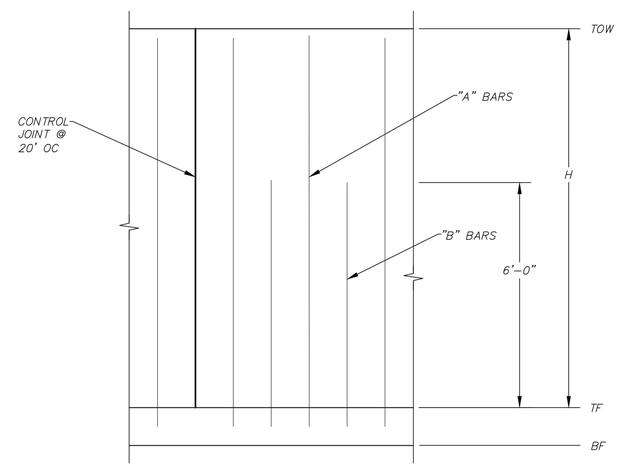

NOTE: WALL HORIZONAL REINFORCEMENT AND FOOTING REINFORCEMENT NOT SHOWN.

K PARTIAL WALL ELEVATION
SCALE: 1/2" = 1'-0"

90% SUBMITTAL

Client / Agency

U.S. Fish and Wildlife Service
Red Bluff Fish and Wildlife Service
10950 Tyler Road
Red Bluff, California 96080

SAGE ENGINEERS
EARTH • WATER • ENERGY

2251 Douglas Blvd., Ste. 200
Roseville, CA 95661
(916) 677-4800
www.SAGEngineers.com

REGISTERED PROFESSIONAL ENGINEER TRAVIS W. KOCH No. 75422 Exp. 12/31 CIVIL STATE OF CALIFORNIA

PRELIMINARY
NOT FOR CONSTRUCTION

Revisions		
No.	Date	Description

Drawing Information	
Date	29 September 2014 (12:11)
Designer	S. MOOSE
Drafter	L. CHAPMAN
Checked	T. KOCH
File Name	11-018.00-WARD.dwg
Plotted Scale	0 ½ 1

WARD DAM FISH PASSAGE IMPROVEMENT

STRUCTURAL SECTIONS AND DETAILS

Job Number 11-018.00

Sheet Number

S3

Sheet 13 of 13

Appendix B: CDFW Fish Passage Improvement Design Checklist

Project Specific Information Requirements
DFG Fisheries Engineering Review
Updated: 8/13/2014

Introduction

The following lists provide guidance on the type of information required for DFG fisheries engineering staff to complete reviews of project designs for fish passage and screening projects at water diversions. The lists are developed almost entirely using published DFG (2000 and 2001) and NMFS (1997 and 2001) criteria and new DFG guidance on fish passage design (2009). Using these lists will streamline the engineering review process as well as ensure the projects provide sustainable fish protection and passage. If a required item is thought to be unnecessary, please provide the rationale for not including it. Conversely, while these lists attempt to cover the key parameters for most projects, they are not comprehensive as there may be site-specific opportunities to provide better fish passage and some guidance cannot be easily translated into a simple checklist (e.g avoidance of predation habitat). Furthermore, this is the first iteration of these checklists; future editions will no doubt be more complete. There are lists for the following types of structures/diversions: fish screens, fish ladders, boulder weirs, rock chutes, roughened channels, and at grade diversions.

Fish Screens

(See current DFG and NMFS screening criteria, California Salmonid Stream Habitat Restoration Manual, 3rd edition, California Department of Fish and Game
http://www.dfg.ca.gov/fish/Resources/Projects/Engin/Engin_ScreenCriteria.asp
http://swr.nmfs.noaa.gov/hcd/fishscrn.pdf
http://www.dfg.ca.gov/fish/REsources/HabitatManual.asp)

1. Target species and life stages to be protected at proposed screening site (e.g. will steelhead rainbow trout fry be present?) (NMFS pg. 4-5)
   Juvenile Chinook Salmon.
2. Fish screen structure placement (e.g. on-stream, in-canal, in-reservoir, or pumped)(NMFS pg. 3)
   In-canal, retrofit existing fish screen with louvers, and relocate bypass pipes.
3. Records of diversion flows **and** stream flows, including maximums and minimums, during irrigation season (NMFS pg. 2)
   Maximum diversion water right is 70 cfs, although LMMWC has agreed that 50 cfs is the maximum diversion flow at this facility. No minimum.

Comments on
Mill Creek Fish Passage Assessment and Restoration Project, Phase 1 Ward Dam Site 90% Basis of Design and Plans, September 16, 2014

Steven Thomas

General

The proposed design allows for the diversion to take LMMWC's water right (50 cfs) before water can pass through the fish ladder. While we respect the status of Los Molinos Mutual Water Company's senior water right, sufficient flow downstream must be maintained to keep aquatic life alive per CDFG code. Is a minimum of 2.5 cfs (fish screen bypass flow) acceptable to CDFW for maintaining life in Mill Creek, including the lives of fish passing through the fish return pipe? Does a stream bypass agreement exist?

Fish Ladder

The fish ladder as proposed has a break in slope in the fish ladder with a milder slope for the uppermost two weirs (Design B below). Per the design guidelines, only the crest elevation of the chute is supposed to be lowered on the uppermost two weirs to allow for increasing velocity head (Design A, below). By dropping only the chute crest elevation the sloping sides on all weirs should begin to overtop at approximately the same flow. The slope of the ladder floor and the crest of the sloping sides can remain constant for the entire length of the fish ladder.
Plan was revised to have constant ladder floor gradient, and just the chute crests are lowered.

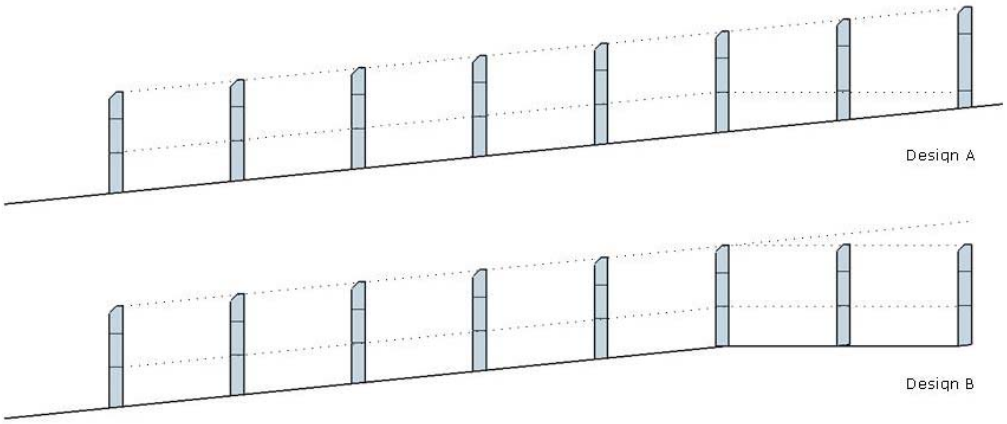

Fish Screen

The fish return pipe is proposed to be operated at 2.5 cfs. The return pipe is capable of carrying more flow. Higher bypass flows will aid in keeping the screen clean by increasing sweeping velocity near the end of the screen. I recommend operating the fish return pipe at flows of 5 to 10 cfs, whenever possible.

Agreed. The 95% drawings include an 18" diameter pipe that will be capable of carrying higher bypass flows. They amount of bypass flow is an issue that should be resolved between LMMWC and the regulatory agencies.

The flashboard weir controlling flow into the fish return pipe should be notched to provide a minimum of 6 inches of depth over the weir. The notch should be towards the fish screen side of the weir to create sweeping flows to the end of the screen.
The fish screens and juvenile bypass pipe are backwatered by a Parshall Flume located just downstream from the screens. The invert of the pipe is 287.4, while the invert of the flume is 288.6. The bypass pipe should have adequate depth on the upstream edge whenever the diversion is in operation.

A 30 ft long extension to the fish return pipe is removable for when the diversion is not operating. That section of pipe will be very heavy, perhaps over 700 pounds. How will that extension pipe be handled (installed and removed) seasonally and how will it be supported once installed?
The 95% designs have re-routed the juvenile bypass pipe into the second pool of the fish ladder. This design should limit the exposure of the pipe to potentially damaging high flows, while also dropping the salmonids in an environment that ideally will be unsuitable to predators.

The junction between the permanent pipeline and the extension section must be smooth with no lip that may cause injury or allow debris to become stuck inside the pipe. Please provide details of the extension coupler.
The 95% designs no longer have the pipe extension.

The bypass return pipe outfall should be located in an area with swift flows and adequate depth. I would like the opportunity be on site when siting the line for the bypass return pipe.
The 95% proposes locating the outfall in the second pool of the fish ladder. The pool will have adequate depth, and should move the juvenile swiftly downstream.

On Drawings Sheet C7, Detail 5, there are two ½ inch dimensions noted but I cannot determine what they refer to.
The ½ inch dimensions was intended to show spacing between baffle and floor. This was fixed.

Details for how the baffle assemblies will be installed behind the fish screen are not included in the 90% design submittal. The BOD report (page 19) states the contractor is to design and manufacture retrofit pieces to install the baffle assemblies. The BOD report states, "the contractor will be required to submit shop drawings for approval by the project engineer and CDFW engineer." Please change "CDFW engineer" to "NMFS engineer."
The louver designs are intended to slide into the existing flash board brackets behind the existing fish screens. The 95% plans show the designs in place.

The dimensions of the baffles are stated as 4 inches wide by 3.5 feet high in the BOD report (page 19) but the drawings show them as 8 inches wide by 3.3 feet high. I believe wider baffles will be more effective in balancing flows.

The louvers will be built in individual racks that are about 5 feet wide and 5 feet tall. Each rack will have 6 louvers and will fit into the existing flashboard slots behind the screens. The louvers extend about 3.5 feet high, and each louver is 8.5 inches wide with 0.5" of clearance laterally between baffles. Steel plate will be installed perpendicular to the screen face onto the existing fish screen structure to isolate flow coming through each 5 foot length of fish screen, and routing the flow through the louvers. The louver rack design is based on an ODFW design. Ideally more louvers will allow for more flexibility in balancing each individual bank of screens.

The BOD report states on page 13, "During low flow periods, flash boards will be installed at the downstream rice box to ensure there is sufficient flow depth in front of the fish screen to meet approach velocity criteria." Sufficient depth of water on the screen should be provided at all times, not just at low flows. The paragraph goes on to say the water master will need to "make some iterative adjustment to the flash boards and the slide gate to achieve equilibrium between stream flow and canal flow." Ideally, the head gate (slide gate) will remain fully open when diverting water and diversion flows will be controlled by the flash boards in the rice box. This will allow maximum submergence of the fish screen which means lower approach velocities, as long as the screen is not overtopped.
The Parshall Flume provides adequate depth at the screens. The rice box has been removed from the design.

--- end comments ---

Tricia Bratcher

Page 11: in the middle of a paragraph are the words, "s. Error! Reference source not found." This needs to be corrected (removed or insert reference).
The report has been corrected.
Question: How will future cleaning of the ladder be handled (e.g., if sediment becomes deposited in the ladder)?
It is my understanding that the responsibility is being resolved in the MOU. The ladder could be cleaned of sediment (likely by hand) during the summer. The chute and pool design should limit the amount of sediment deposition.
Does nhc feel that the data used in developing the flow duration analysis is robust enough to support the subsequent flow predictions (e.g. 1 year, 2 year, 50 year events, etc.)?
The 85-year gage record at the USGS is long enough to provide a good understanding of more frequent return intervals. Based on the 5% and 95% confidence intervals output from the HEC-SSP software, the 2 year flow has an uncertainty of about +/- 600 cfs, the 50 year about +/-5,000 cfs.
Sequence of events section: Please identify if any road work is required in terms of needing to improve access.
We have updated this section.
I'm also curious about how you foresee routing of coarse woody debris (big logs), esp. at the outer wall of the ladder (the wall that is in the channel). I could not quite figure out the height of the outer wall at the outlet…the Antelope Creek/Edwards Dam ladder wall is pretty high (sticking up out of the channel, relatively speaking), and there has concern raised on the part of the landowner about LWD hanging up on it.
The wall will be about 5.5 feet above the dam crest. The wall needs to be high enough to keep upmigrating adults from jumping out of the ladder, as well as to ensure that during high fish

passage flow, overflow from the stream doesn't pour into the ladder from over the wall. The wall will be submerged during high flow events (the 10-year will submerge the wall by about 1.5'.

Burt Bundy:

Brenda, my only comment is that I thought that the canal intake was to be about 20 feet upstream of the ladder intake. I'm concerned about fish exiting the ladder, then wandering back into the canal and flushed down the by-pass.

This was a design concern as well, however there is limited room to move the diversion intake where it won't be silted in requiring instream maintenance or significant excavation. The current design includes a trash rack with tightly spaced bars (about 10" O.C) about 3 feet in front of the intake. This should help keep fish away from the velocity barrier where they may be entrained.

---end comments---

Kevin Gale

BOD

Page 5- Paragraph 7. Sluice gate intake and diversion channel were not built or rebuilt in 1997.

We have updated the text.

Page 12-Paragraph 2. This statement seems to convey that LMMWC's water right supersedes providing flow through the fish ladder until the right is met. This is not the case and providing for fish passage is codified in Fish and Game Code 5901 and 5935, CESA and ESA. Fish passage must be provided concurrent with diversion flows whether or not the invert of the diversion is set lower or higher than the invert of the fish ladder. An operational plan should be developed and accepted by CDFW and NOAA which shows that passage will be provided when required, absent the LMMWC right being met. This would be implemented by regulating the diversion control gate to route flow through the ladder.

The intent was to ensure there was flow control to determine how flow was distributed, and for the system to operate under the current operational framework.

Page 15-Paragraph 3. Is the extension of the dam crest required based upon channel capacity reductions as a result of the ladder being plugged at the u/s end or just as a result of the ladder somehow inhibiting flow (ladder wall/us weir)? Would the model change if the invert/us weir of the fish ladder were lower? Could the fish ladder invert and u/s walls be lowered enough to eliminate channel capacity concerns without extending the dam? How much would the 100yr wse increase and where would it converge with pre-project wse if the ladder invert were lowered to the elevation of the diversion or lower?

The extension of the dam crest has been removed from the design. Further modeling showed it was not necessary to address flood conveyance issues.

Plan:

C2: suggest making the extension 20', this is normally the length which is available and would eliminate the potential need for an extra joint.

This has been removed from the design.

C3: how will ladder be accessed for maintenance during migration flows?

Access will be from maintenance walkways along the landside wall. Unfortunately, any large maintenance issues will likely require low flow conditions to address.

Although there is very little detail regarding the bypass entrance reconfiguration, it appears as though there will be dead zones between the terminus of the screen and the bypass entrance control. Suggest modifying layout of rice box to eliminate expanded cross section and corners. A smooth transition from screen to pipe should be the goal.
The entrance has been reconfigured to reduce slack areas.

Suggest replacing flash boards with slide gate at bypass inlet to allow for ease of maintenance and better fish/sediment routing.
The bypass pipe will be controlled with a slide gate.

C4: this does not show foundations or cutoff walls for ladder
Suggest reducing freeboard or reconfiguring ladder walls at u/s end to allow for better debris routing during high flow events.
The 95% SAGE structural sheets include foundations and cutoff walls.

C5: There is no detail regarding the ladder foundation which will probably need to be extensive since the ladder projects downstream from the existing ladder footprint.
The 95% SAGE structural sheets include this information.

4. Stream flow vs. depth rating curve at diversion intake (NMFS pg. 2)
   Diversion intake invert elevation: 287.6'.

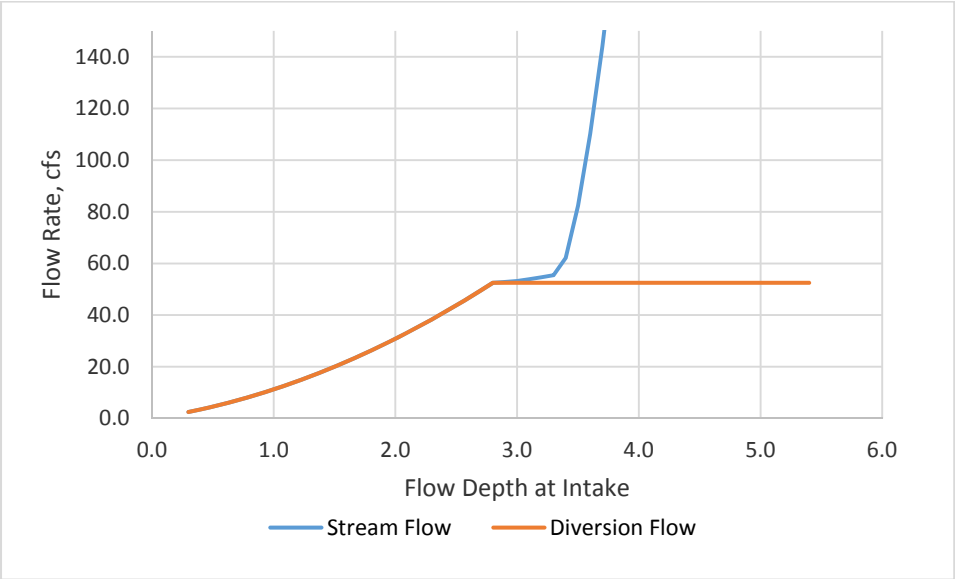

Figure 1. Stream flow vs depth at diversion intake rating curve.

5. Description of fish screen openings, including porosity and dimensions of round, square, or slotted openings (NMFS pg. 5-6)
   Retrofit existing fish screen, reuse existing 3/32" round opening stainless steel perforated plate. Meet criteria.
6. Applicable approach velocity and sweeping velocity criteria (NMFS pg. 4-5)
   In canal fish screen, maximum approach velocity is 0.4 fps. Sweeping velocity should be greater than approach velocity. Optimal range for sweeping velocity is 0.8 to 3.0 fps.
7. Fish screen area calculation performed in accordance with DFG Fish Screening Criteria

Table 1. Fish screen area calculation table.

Max diversion flow	50	cfs
Approach velocity	0.4	fps
Screen Area Design Calc		
flow area	125	sq ft
flow depth in front of screen	2.5	ft
screen length	50	ft
20% oversized screen	60	ft
screen floor elev	287.6	

8. Water depth and approach velocity calculations in front of the fish screen throughout range of diversion flows (NMFS pg 3-4)
   Flow through the diversion is controlled by a 6 foot wide Parshall Flume with invert elevation of 288.6 just downstream of the existing fish screens. The screens extend from about 287.6 up to about 291.5. Table 2 shows the submerged screen area and approach velocity for diversion flows from 5 to 50 cfs. 50 cfs is the high design diversion flow at

Ward Dam. The screen area is the total exposed screen area, the effective screen area assumes 20% of the screen is blocked by structural components, and the effective approach velocity is the diversion flow divided by the effective screen area.

Table 2: Ward Dam Screen Velocity

Stage (ft)	Diversion Flow (cfs)	Screen Depth (ft)	Screen Area (sq.ft)	Effective Screen Area (sq. ft)	Effective Approach Velocity (ft/s)
289	5.2	1.4	85.4	71.17	0.07
289.25	11.5	1.65	100.65	83.87	0.14
289.5	19.6	1.9	115.9	96.58	0.20
289.75	29.1	2.15	131.15	109.29	0.27
290	40.1	2.4	146.4	122.00	0.33
290.25	50.0	2.65	161.65	134.71	0.37

9. Evidence that flow uniformity criterion will be met (NMFS pg. 5)
   The fish screens will be retrofitted to isolate each five foot length of the screen. Louvers will be installed downstream of the fish screens and will help regulate the amount of flow through each five foot length of screen to increase flow uniformity through the screens.

10. Sweeping velocity calculations at several locations along the length of the screen throughout range of diversion and bypass flows (NMFS pg. 5)
    The following table shows the sweeping velocity in front of screen at 3 locations (US, mid, and DS). The table assumes the diversion flow is evenly distributed across the screen face. The sweeping velocity is greater than the approach velocity.

Table 2. Sweeping velocity at US, mid and DS end of screen.

Diversion Flow (cfs)	Upstream Edge of Screens (Channel Width=9.1ft)				Mid-point of Screens (Channel Width=5.6 ft)				Downstream Edge of Screens Channel Width=1.5'			
	Flow (cfs)	Flow Depth (ft)	Flow Area (sq. ft)	Sweeping Velocity	Flow (cfs)	Flow Depth (ft)	Flow Area (sq. ft)	Sweeping Velocity	Flow (cfs)	Flow Depth (ft)	Flow Area (sq. ft)	Sweeping Velocity
5	7.5	0.4	3.4	2.2	5	1.4	7.7	0.7	2.5	1.4	2.1	1.2
10	12.5	0.6	5.2	2.4	7.5	1.5	8.3	0.9	2.5	1.6	2.4	1.1
15	17.5	0.7	6.8	2.6	10	1.6	8.8	1.1	2.5	1.7	2.6	1.0
20	22.5	0.9	8.1	2.8	12.5	1.7	9.3	1.3	2.5	1.9	2.8	0.9
25	27.5	1.0	9.3	2.9	15	1.7	9.8	1.5	2.5	2.0	3.0	0.8
30	32.5	1.2	10.5	3.1	17.5	1.8	10.2	1.7	2.5	2.2	3.2	0.8
35	37.5	1.3	11.5	3.3	20	1.9	10.6	1.9	2.5	2.3	3.4	0.7
40	42.5	1.4	12.5	3.4	22.5	2.0	11.0	2.0	2.5	2.4	3.6	0.7

45	47.5	1.5	13.5	3.5	25	2.0	11.3	2.2	2.5	2.5	3.7	0.7
50	52.5	1.6	14.4	3.6	27.5	2.1	11.7	2.4	2.5	2.6	3.9	0.6

11. Screen exposure time calculation (NMFS pg. 7)
    CDFW Criteria: Screen exposure time < 60 seconds. For the existing condition, the maximum exposure time is about 85 seconds (1.4 mins). The 95% design proposes to narrow the canal width to 9feet and 1.5 feet at the upstream and downstream end of fish screen, respectively. The narrower channel creates higher average channel velocity and sweeping velocity. Thus meeting the 60 second screen exposure time criteria.

Table 3. Sweeping velocity and exposure time calculation.

Diversion Flow, cfs	average sweeping vel, fps	exposure time with narrower canal, sec
5	1.4	44
10	1.4	41
15	1.6	39
20	1.7	36
25	1.8	34
30	1.9	32
35	2.0	31
40	2.0	29
45	2.1	28
50	2.2	27

12. Velocity calculations between end of screen and bypass entrance (NMFS pg. 7)
    The bypass flow will flow through a narrow 1.5 foot wide section into the bypass pipe. The channel has a slope of about 0.005 ft/ft.

Table 4. End of screen to bypass entrance velocity calculation.

Bypass Flow, cfs	Flow Vel into Bypass Pipe, fps	Flow depth at bypass inlet, ft
2.5	3.7	0.45
5.0	4.5	0.74
7.5	5.0	1.0
10	5.3	1.3

13. Flow depth calculations within bypass conduit **and** in stream at bypass outlet at minimum bypass flow (NMFS pg. 8-9)

The 95% design proposes using HDPE pipe at a 0.005 ft/ft slope. Table 6 provides velocity and depth in the conduit for a range of lower bypass flows. The outlet of the bypass pipe will be into the second to bottom pool of the proposed chute and pool fish ladder. The pool depth will be at

least 3.5 feet to about 5.5 feet at high stream flows. The pipe will not become submerged until stream flows exceed about 2,000 cfs (flow is exceeded less than 1% of the year.) Velocities in the pool are variable between 0 cfs (in low flow conditions with now flow through the ladder), to about 10 ft/s when stream flow is 2,000 cfs.

Table 5. Flow in bypass conduit

Bypass Flow, cfs	Depth (ft)	Ratio of Flow Depth to Pipe Diameter	Velocity (ft/s)
2.5	0.5	0.33	4.8
3	0.55	0.37	5.1
3.5	0.60	0.4	5.3
4	0.65	0.43	5.5
4.5	0.69	0.46	5.7
5	0.73	0.49	5.8
5.25	0.75	0.5	5.9

14. Estimated bypass flow needed to meet fish screen criteria (cfs).(NMFS pgs. 5, 7, and 8)
    The minimum bypass flow to meet conduit flow criteria for a depth of 0.75 ft is 5.25 cfs. Using the Northwest criteria for a depth/diameter greater than 0.4, 3 cfs is required. The Northwest criteria may be more applicable here as the design uses an 18” diameter rather than 24” diameter bypass pipe.

15. Velocity calculations in stream at bypass outlet (NMFS pg. 8)
    See tables for 13.

16. Drop height and impact velocity calculation at bypass outlet, if applicable (NMFS pg. 9)
    The critical design would be for a bypass flow of 3.5 cfs without any flow through the fish ladder. The pool depth would be 3.75 feet. The drop height would be 0.8 feet.

17. For paddle wheel driven cleaning systems, fish screen area calculations showing passive screening criteria are met when paddle wheel driven wipers no longer operate
    The cleaning system for this screen is electric power. The existing cleaning will be kept in place.
18. Description of fish screen cleaning mechanism, including proposed frequency of cleaning
    Ganged brush system powered by electricity will clean the screen surface
19. Assessment of sediment transport/scour conditions at fish screen for on channel installations (NMFS pg. 2)
    Sediment deposition is a noted issue with the existing screens. The diversion intake has been adjusted to help reduce sediment ingestions, and the diversion layout has been adjusted to better route sediment through the system.
20. Specific information describing the type of corrosion-resistant screening material, bypass control/pipe and other materials that will directly affect fish. (NMFS pg. 6-8)
    Stainless steel screen panels, and corrosion resistance coated fish screen support. The structure has performed well. No issues.

21. Design drawings showing site topography, and dimensions of fish screen structure in plan, elevation, longitudinal profile, and cross-sectional views along with important component details.
    See 95% plan set.
22. Any additional information which may be required to show that screen will meet current DFG/NMFS screening criteria.
    No additional information.
23. Operation and maintenance plan which includes preventive and corrective maintenance procedures, inspection and reporting requirements, maintenance logs, etc.
    CDFW and LMMWC are working on a Memorandum of Understanding.
24. Post construction evaluation and monitoring plan.
    To be coordinated with Agencies and Operator.

Fish Ladders

(See Parts IX, and XII, California Salmonid Stream Habitat Restoration Manual, 3rd edition, California Department of Fish and Game
http://www.dfg.ca.gov/fish/REsources/HabitatManual.asp)

1. Explanation as to why the specific fish passage design was selected, including a discussion of the elements considered when designing the fish ladder entrance.
   The Mill Creek TAC discussed the following alternatives:
   W1. Remove existing dam, re-grade stream bed and construct pump station
   W2. Remove existing dam, construct roughened channel
   W3. Remove a portion of existing dam, reconstruct fish ladder
   Alternative W1 was not selected due to high operation cost (i.e. electricity and maintenance for pump station)
   Alternative W2 was not selected because Los Molinos Mutual Water Company is concerned the removal of existing dam will destabilize the stream channel
   Alternative W3 was selected to proceed

2. Target species, life stages and migration timing at project site.
   Fall and Spring Run Adult Chinook Salmon. Upstream juvenile migration is not required.

3. Calculation of lower and upper fish passage stream flows for each lifestage and species

Table 6. Upper and lower limit fish passage flows for Mill Creek at Ward Dam.

Species/Lifestage	Upper Limit	Lower Limit
Adult Anadromous Salmonids	1920	3
Juvenile Salmonids	587	1

The upper limit flow is based on flow duration analysis at the Mill Creek near Los Molinos gage (USGS 11381500). Alternative minimum flows were used for the lower limit passage flows at Ward Dam because of the significant diversion flow that occurs

between the Los Molinos gage and Ward Dam. See NHC Mill Creek pre-design report (2001) for details. CDFW has agree design only need to meet criteria for Adult Salmonids passage flows.

4. Calculation showing attraction flow rates are appropriate
   At lower limit flow (Qstream = 3 cfs), all flow through fish ladder. 100% attraction flow rate.
   At upper limit flow (Qstream = 1920 cfs), 165 cfs flow through fish ladder, approximately 8.5% of total stream flow.

5. Rating curves for headwater and tailwater conditions:

Tailwater rating curves are computed in HEC-RAS model based on 2011 NHC Ward Dam survey data. Headwater curves are computed assuming critical depth at the dam crest and fish ladder exit weir.

Table 7. Summary of fish ladder operation flows at upper and lower limit passage flows.

	Upper Limit	Lower Limit
Fish Ladder Flow, cfs	165	3
Stream Flow, cfs	1920	3
Attraction Flow %	8.3%	100%
Stream WSE at Entrance, ft	288.4	284.5
Stream WSE at Exit, ft	294.4	290.9
Total Drop, ft	6	6.4

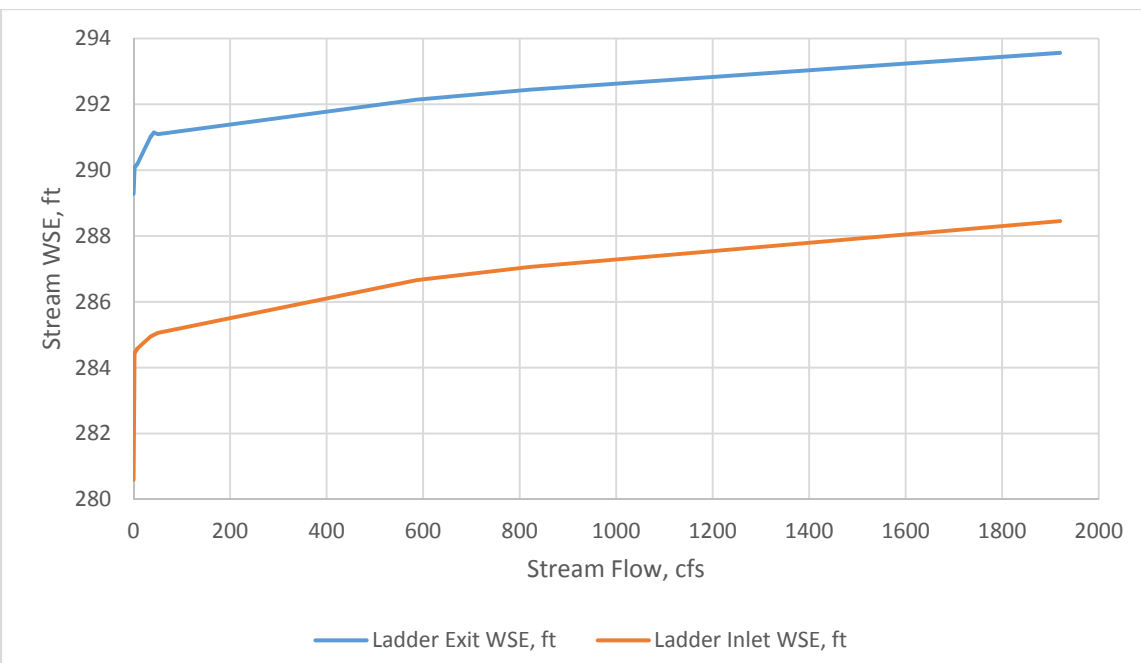

Figure 2. Stream flow vs stage rating curve at fish ladder entrance and exit.

6. Hydraulic analysis of flow through the fish ladder demonstrating that the ladder functions properly over the anticipated range of stream and ladder flows. (This should include an assessment of the flow rate and depth over each weir and through each orifice, and an assessment of the threshold between plunging flow and streaming flow)

   The drop between each weir is 0.9 ft, less than the 1.0 foot for adult passage in criteria. The invert of the chute was lowered on the upstream two most weirs to allow for increased drop heights due to flow acceleration in streaming flow. The drop heights over these two weirs is 0.65 ft.

   Flow is assumed to be critical over the exit weir, and fully streaming by the third weir downstream from the exit. Critical flow calculations are used to compute flow over the exit weir. The Chezy Equation, assuming a C=30, is used to compute the streaming flow conditions downstream.

   Using the Ead relationships, streaming flow will begin to occur when the ladder flow begins to exceed about 10 cfs. With a 3 foot wide chute, this will begin to occur when flow depth is about 1.1 feet. The chute height was set to 0.75 feet to ensure the sloping weir section was inundated when streaming flow began to occur. The normal depth for 10 cfs in streaming flow is 0.5 feet in a rectangular 3 foot wide notch. The notch height for the downstream weirs is set to 0.25 feet to ensure concentrated streaming flow does not occur. The weir just downstream of the exit weir has a notch height of 0.5 feet to help transistion.

   At the high flow conditions, the depth over the upstream weir is about 4.3 feet. The normal flow depth is 2.4 feet. Over the first two weirs, an additional 1.95 feet of drop occurs. The total drop height over these weirs is about 1.6 feet. This is greater than the recommended maximum drop height, but the sloping shoulders should provide a number of passage options.

   Flow is expected to be plunging over the sloping weir sections where they are not submerged. With drop heights of 0.9 feet, and a 2.75H:1V slope, this provides a plunging passage corridor about 2.5 feet wide. The weir flow over this section of weir is expected to be about 2.5 cfs. The effective pool area is expected to be about 8.4 feet with at least 3.5 feet of depth. This pool volume is adequate to dissipate the energy from 2.5 cfs without exceeding the EDF criteria.

7. Energy dissipation factor calculations at maximum design flow in fish ladder pools
   See Pool and Chute work sheet.
   Up to the transition to streaming flow (Qladder = 9.4 cfs), the EDF is 0.7 ft-lb/s/ft^3. This meets the 4.0 ft-lb/s/ft^3 criteria. From 10.7 to 111 cfs, center chute is in transition flow regime. The EDF in this area is not used to qualify for EDF criteria. The EDF on the outer edge of shoulder weir crest will remain in plunging flow and less than 4.0 ft-lb/s/ft^3.

8. Water stage calculations showing fishway has 3 ft freeboard to keep leaping fish in ladder
   See fish ladder profile on sheet C3. Fish ladder wall is set at about the 2-year instream WSE, which is about 3 feet higher than the Upper Limit WSE in fish ladder.

9. Flow patterns and in-stream velocities at entrance to fishway
   Fish ladder entrance has straight jet that extend about 10 to 15 feet downstream at upper limit flow. Rock apron at downstream edge of dam will also help guide fish into fish ladder entrance.

10. Geotechnical information may be necessary to ensure project design is structurally appropriate.
    See geotechnical report prepared by SAGE. SAGE will investigate the integrity of existing dam, conduct foundation study for new structures.

11. Design drawings showing site topography, and structural dimensions in plan, elevation, longitudinal profile, and cross-sectional views along with important component details.
    See 95% design plan set.

12. Maintenance plan which includes preventative and corrective measures, assignment of personnel for maintenance during/after storms, inspection and reporting requirements, maintenance logs, etc.
    This is currently being resolved through a Memorandum of Understanding between the fisheries agencies and LMMWC.

13. If the ladder contains operational components, such as adjustable weirs, multiple entrances, etc., the plans should include an Operations Manual and 1 page operations guide that will be kept on site.
    Fish ladder exit is uncontrolled.

14. Post construction evaluation and monitoring plan.
    To be coordinated with Agencies and Operator.

Appendix C: Responses to 90% TAC Team Comments

Comments on
Mill Creek Fish Passage Assessment and Restoration Project, Phase 1 Ward Dam Site 90% Basis of Design and Plans, September 16, 2014

Steven Thomas

General

The proposed design allows for the diversion to take LMMWC's water right (50 cfs) before water can pass through the fish ladder. While we respect the status of Los Molinos Mutual Water Company's senior water right, sufficient flow downstream must be maintained to keep aquatic life alive per CDFG code. Is a minimum of 2.5 cfs (fish screen bypass flow) acceptable to CDFW for maintaining life in Mill Creek, including the lives of fish passing through the fish return pipe? Does a stream bypass agreement exist?

Fish Ladder

The fish ladder as proposed has a break in slope in the fish ladder with a milder slope for the uppermost two weirs (Design B below). Per the design guidelines, only the crest elevation of the chute is supposed to be lowered on the uppermost two weirs to allow for increasing velocity head (Design A, below). By dropping only the chute crest elevation the sloping sides on all weirs should begin to overtop at approximately the same flow. The slope of the ladder floor and the crest of the sloping sides can remain constant for the entire length of the fish ladder.
Plan was revised to have constant ladder floor gradient, and just the chute crests are lowered.

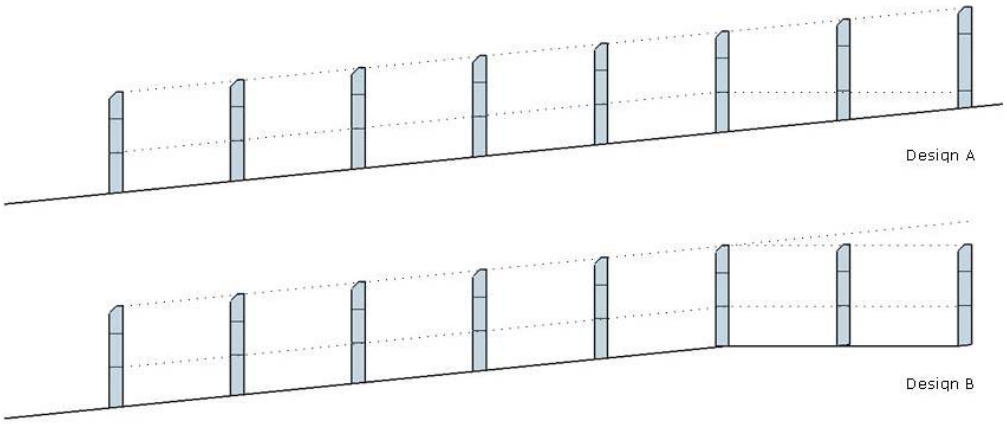

Fish Screen

The fish return pipe is proposed to be operated at 2.5 cfs. The return pipe is capable of carrying more flow. Higher bypass flows will aid in keeping the screen clean by increasing sweeping velocity near the end of the screen. I recommend operating the fish return pipe at flows of 5 to 10 cfs, whenever possible.

Agreed. The 95% drawings include an 18" diameter pipe that will be capable of carrying higher bypass flows. They amount of bypass flow is an issue that should be resolved between LMMWC and the regulatory agencies.

The flashboard weir controlling flow into the fish return pipe should be notched to provide a minimum of 6 inches of depth over the weir. The notch should be towards the fish screen side of the weir to create sweeping flows to the end of the screen.
The fish screens and juvenile bypass pipe are backwatered by a Parshall Flume located just downstream from the screens. The invert of the pipe is 287.4, while the invert of the flume is 288.6. The bypass pipe should have adequate depth on the upstream edge whenever the diversion is in operation.

A 30 ft long extension to the fish return pipe is removable for when the diversion is not operating. That section of pipe will be very heavy, perhaps over 700 pounds. How will that extension pipe be handled (installed and removed) seasonally and how will it be supported once installed?
The 95% designs have re-routed the juvenile bypass pipe into the second pool of the fish ladder. This design should limit the exposure of the pipe to potentially damaging high flows, while also dropping the salmonids in an environment that ideally will be unsuitable to predators.

The junction between the permanent pipeline and the extension section must be smooth with no lip that may cause injury or allow debris to become stuck inside the pipe. Please provide details of the extension coupler.
The 95% designs no longer have the pipe extension.

The bypass return pipe outfall should be located in an area with swift flows and adequate depth. I would like the opportunity be on site when siting the line for the bypass return pipe.
The 95% proposes locating the outfall in the second pool of the fish ladder. The pool will have adequate depth, and should move the juvenile swiftly downstream.

On Drawings Sheet C7, Detail 5, there are two ½ inch dimensions noted but I cannot determine what they refer to.
The ½ inch dimensions was intended to show spacing between baffle and floor. This was fixed.

Details for how the baffle assemblies will be installed behind the fish screen are not included in the 90% design submittal. The BOD report (page 19) states the contractor is to design and manufacture retrofit pieces to install the baffle assemblies. The BOD report states, "the contractor will be required to submit shop drawings for approval by the project engineer and CDFW engineer." Please change "CDFW engineer" to "NMFS engineer."
The louver designs are intended to slide into the existing flash board brackets behind the existing fish screens. The 95% plans show the designs in place.

The dimensions of the baffles are stated as 4 inches wide by 3.5 feet high in the BOD report (page 19) but the drawings show them as 8 inches wide by 3.3 feet high. I believe wider baffles will be more effective in balancing flows.

The louvers will be built in individual racks that are about 5 feet wide and 5 feet tall. Each rack will have 6 louvers and will fit into the existing flashboard slots behind the screens. The louvers extend about 3.5 feet high, and each louver is 8.5 inches wide with 0.5" of clearance laterally between baffles. Steel plate will be installed perpendicular to the screen face onto the existing fish screen structure to isolate flow coming through each 5 foot length of fish screen, and routing the flow through the louvers. The louver rack design is based on an ODFW design. Ideally more louvers will allow for more flexibility in balancing each individual bank of screens.

The BOD report states on page 13, "During low flow periods, flash boards will be installed at the downstream rice box to ensure there is sufficient flow depth in front of the fish screen to meet approach velocity criteria." Sufficient depth of water on the screen should be provided at all times, not just at low flows. The paragraph goes on to say the water master will need to "make some iterative adjustment to the flash boards and the slide gate to achieve equilibrium between stream flow and canal flow." Ideally, the head gate (slide gate) will remain fully open when diverting water and diversion flows will be controlled by the flash boards in the rice box. This will allow maximum submergence of the fish screen which means lower approach velocities, as long as the screen is not overtopped.
The Parshall Flume provides adequate depth at the screens. The rice box has been removed from the design.

--- end comments ---

Tricia Bratcher

Page 11: in the middle of a paragraph are the words, "s. Error! Reference source not found." This needs to be corrected (removed or insert reference).
The report has been corrected.
Question: How will future cleaning of the ladder be handled (e.g., if sediment becomes deposited in the ladder)?
It is my understanding that the responsibility is being resolved in the MOU. The ladder could be cleaned of sediment (likely by hand) during the summer. The chute and pool design should limit the amount of sediment deposition.
Does nhc feel that the data used in developing the flow duration analysis is robust enough to support the subsequent flow predictions (e.g. 1 year, 2 year, 50 year events, etc.)?
The 85-year gage record at the USGS is long enough to provide a good understanding of more frequent return intervals. Based on the 5% and 95% confidence intervals output from the HEC-SSP software, the 2 year flow has an uncertainty of about +/- 600 cfs, the 50 year about +/-5,000 cfs.
Sequence of events section: Please identify if any road work is required in terms of needing to improve access.
We have updated this section.
I'm also curious about how you foresee routing of coarse woody debris (big logs), esp. at the outer wall of the ladder (the wall that is in the channel). I could not quite figure out the height of the outer wall at the outlet…the Antelope Creek/Edwards Dam ladder wall is pretty high (sticking up out of the channel, relatively speaking), and there has concern raised on the part of the landowner about LWD hanging up on it.
The wall will be about 5.5 feet above the dam crest. The wall needs to be high enough to keep upmigrating adults from jumping out of the ladder, as well as to ensure that during high fish

passage flow, overflow from the stream doesn't pour into the ladder from over the wall. The wall will be submerged during high flow events (the 10-year will submerge the wall by about 1.5'.

Burt Bundy:

Brenda, my only comment is that I thought that the canal intake was to be about 20 feet upstream of the ladder intake. I'm concerned about fish exiting the ladder, then wandering back into the canal and flushed down the by-pass.

This was a design concern as well, however there is limited room to move the diversion intake where it won't be silted in requiring instream maintenance or significant excavation. The current design includes a trash rack with tightly spaced bars (about 10" O.C) about 3 feet in front of the intake. This should help keep fish away from the velocity barrier where they may be entrained.

---end comments---

Kevin Gale

BOD

Page 5- Paragraph 7. Sluice gate intake and diversion channel were not built or rebuilt in 1997.

We have updated the text.

Page 12-Paragraph 2. This statement seems to convey that LMMWC's water right supersedes providing flow through the fish ladder until the right is met. This is not the case and providing for fish passage is codified in Fish and Game Code 5901 and 5935, CESA and ESA. Fish passage must be provided concurrent with diversion flows whether or not the invert of the diversion is set lower or higher than the invert of the fish ladder. An operational plan should be developed and accepted by CDFW and NOAA which shows that passage will be provided when required, absent the LMMWC right being met. This would be implemented by regulating the diversion control gate to route flow through the ladder.

The intent was to ensure there was flow control to determine how flow was distributed, and for the system to operate under the current operational framework.

Page 15-Paragraph 3. Is the extension of the dam crest required based upon channel capacity reductions as a result of the ladder being plugged at the u/s end or just as a result of the ladder somehow inhibiting flow (ladder wall/us weir)? Would the model change if the invert/us weir of the fish ladder were lower? Could the fish ladder invert and u/s walls be lowered enough to eliminate channel capacity concerns without extending the dam? How much would the 100yr wse increase and where would it converge with pre-project wse if the ladder invert were lowered to the elevation of the diversion or lower?

The extension of the dam crest has been removed from the design. Further modeling showed it was not necessary to address flood conveyance issues.

Plan:

C2: suggest making the extension 20', this is normally the length which is available and would eliminate the potential need for an extra joint.

This has been removed from the design.

C3: how will ladder be accessed for maintenance during migration flows?

Access will be from maintenance walkways along the landside wall. Unfortunately, any large maintenance issues will likely require low flow conditions to address.

Although there is very little detail regarding the bypass entrance reconfiguration, it appears as though there will be dead zones between the terminus of the screen and the bypass entrance control. Suggest modifying layout of rice box to eliminate expanded cross section and corners. A smooth transition from screen to pipe should be the goal.
The entrance has been reconfigured to reduce slack areas.

Suggest replacing flash boards with slide gate at bypass inlet to allow for ease of maintenance and better fish/sediment routing.
The bypass pipe will be controlled with a slide gate.

C4: this does not show foundations or cutoff walls for ladder
Suggest reducing freeboard or reconfiguring ladder walls at u/s end to allow for better debris routing during high flow events.
The 95% SAGE structural sheets include foundations and cutoff walls.

C5: There is no detail regarding the ladder foundation which will probably need to be extensive since the ladder projects downstream from the existing ladder footprint.
The 95% SAGE structural sheets include this information.

APPENDIX D

Wetland Delineation Map

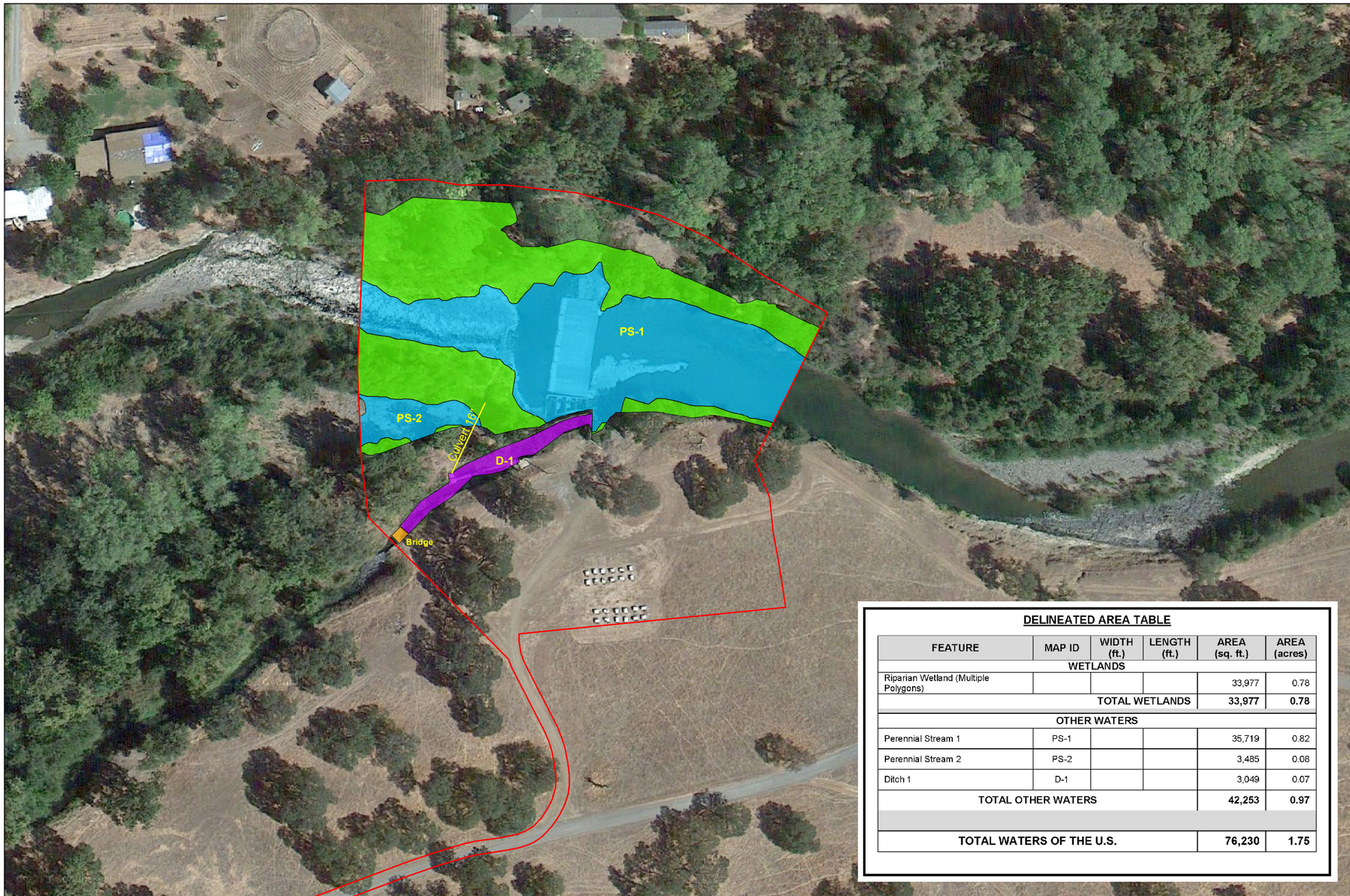

Legend

- Study Area
- Perennial Stream
- Riparian Wetland
- Ditch
- Bridge
- Culvert

FIGURE 6

Preliminary Delineation Map

DELINEATED AREA TABLE

FEATURE	MAP ID	WIDTH (ft.)	LENGTH (ft.)	AREA (sq. ft.)	AREA (acres)
WETLANDS					
Riparian Wetland (Multiple Polygons)				33,977	0.78
TOTAL WETLANDS				**33,977**	**0.78**
OTHER WATERS					
Perennial Stream 1	PS-1			35,719	0.82
Perennial Stream 2	PS-2			3,485	0.08
Ditch 1	D-1			3,049	0.07
TOTAL OTHER WATERS				**42,253**	**0.97**
TOTAL WATERS OF THE U.S.				**76,230**	**1.75**

DELINEATION/GPS SURVEY

Jeff Souza
Ben Myhre
Tehama Environmental Solutions, Inc.
&
John Dittes
Dittes & Guardino Consulting

CLIENT

nhc northwest hydraulic consultants

3950 Industrial Blvd, Ste 100c
West Sacramento, CA 95691

TEHAMA
ENVIRONMENTAL SOLUTIONS, INC.
910 Main Street, Suite D, Red Bluff, CA 96080
(530) 528-8272
www.tehamaenvironmental.com

Delineation of Waters of the U.S.

Mill Creek Fish Passage Restoration Project - Ward Dam

Tehama County, California

N W E S

SCALE

0 100 200 Feet

1 in = 100 ft (11" X 17" paper)

February 2015

NOTE: DELINEATION SHOULD BE CONSIDERED PRELIMINARY UNTIL VERIFIED BY THE U.S. ARMY CORPS OF ENGINEERS

PHOTO SOURCE: Google Earth, August, 2013

APPENDIX E

Site Photos

Photo 1. View of Ward Dam fish ladder, a portion of the dam and canal wall and riparian habitat, on Mill Creek, looking east. Photo date: June 30, 2014.

Photo 2. View of Ward Dam fish screen, canal and riparian habitat, on Mill Creek, looking northwest. Photo date: June 30, 2014.

Photo 3. View of the lower portion of the Ward Dam, looking downstream where the rock scour apron will be installed at the base of the dam, on Mill Creek, looking west. Photo date: June 30, 2014.

Photo 4. View of diversion canal flowing from the headgates to the fish screen and bypass pipe at the Ward Dam, on Mill Creek, looking west. Photo date: June 30, 2014.

Photo 5. View of Ward Dam and canal wall on Mill Creek, looking north. Photo date: June 30, 2014.

Photo 6. View of the fish bypass pipe inlet in the canal, showing debris and sediment accumulating in front of the screen and the bypass pipe inlet at the Ward Dam on Mill Creek, looking west. Photo date: June 30, 2014.