Appendix A

100% Design Plan Drawings

U.S. Department of Interior
Fish & Wildlife Services

CONSTRUCTION PLANS FOR

Deer Creek DCID Dam Fish Passage Project

SEPTEMBER 2017

U.S. Fish & Wildlife Service
Red Bluff Fish & Wildlife Service
10950 Tyler Road
Red Bluff, California 96080
www.fws.gov/redbluff

northwest hydraulic consultants
2600 capitol avenue, suite 140
sacramento, california 95816–5928
phone: (916) 371–7400 fax: (916) 371–7475
www.nhcweb.com

REGISTERED PROFESSIONAL ENGINEER BRIAN G. WARDMAN No. 74371 Exp: 06/30/19 CIVIL STATE OF CALIFORNIA

9/27/2017
BRIAN G. WARDMAN (date)
CALIFORNIA REGISTERED
PROFESSIONAL ENGINEER NO. #74371
northwest hydraulic consultants

SHEET INDEX

COVER SHEET	T1
ACCESS & CONTROL OF WATER SHEET	G1
DEMOLITION SHEET	G2
GENERAL PLAN SHEET	G3
ROCK RAMP PLAN SHEET	C1
ROCK RAMP PROFILE & SECTION SHEET	C2
DIVERSION INTAKE PLAN SHEET	C3
DIVERSION INTAKE PROFILE & DETAILS SHEET	C4
FISH SCREEN PLAN SHEET	C5
FISH SCREEN PROFILE SHEET	C6
JUVENILE BYPASS PLAN & PROFILE SHEET	C7
DIVERSION DITCH PLAN SHEET	C8
DIVERSION DITCH PROFILE & SECTIONS SHEET	C9
STRUCTURAL PLAN SHEET	S1
FISH SCREEN BAY STRUCTURAL DETAIL SHEET	S2
TRASH RACK STRUCTURAL DETAIL SHEET	S3
PADDLEWHEEL ASSEMBLY	M1
BRUSH DRIVE ASSEMBLY	M2
FISH SCREEN ASSEMBLY	M3–M5
ADJUSTABLE ORIFICE PLATE ASSEMBLY	M6–M7
SCREEN STRUCTURE ASSEMBLY	M8
BRUSH SYSTEM ASSEMBLY	M9

GENERAL NOTES

1. THE CONTRACTOR SHALL FURNISH ALL LABOR, MATERIAL, EQUIPMENT, AND INCIDENTALS TO COMPLETE ALL WORK IN ACCORDANCE WITH THESE PLANS AND SPECIFICATIONS.
2. THE CONTRACTOR SHALL BE RESPONSIBLE FOR IDENTIFYING AND AVOIDING DAMAGE TO UNDERGROUND UTILITIES. THE CONTRACTOR SHALL LOCATE EXISTING UTILITIES AT LEAST 48 HOURS PRIOR TO EXCAVATION. ANY RELOCATIONS OR TEMPORARY OUTAGES SHALL BE COORDINATED WITH THE ENGINEER. IF UTILITY CONFLICTS ARE IDENTIFIED, THE CONTRACTOR SHALL HALT ALL WORK IN THE AREA AFFECTED BY THE UTILITY CONFLICT AND SHALL IMMEDIATELY NOTIFY THE ENGINEER.
3. THIS PROJECT IS SUBJECT TO REQUIREMENTS OF PERMITS ISSUED BY VARIOUS REGULATORY AGENCIES. THE CONTRACTOR IS RESPONSIBLE TO UNDERSTAND AND PERFORM ALL WORK IN ACCORDANCE WITH THE REQUIREMENTS OF THE PERMITS. COPIES OF THE PERMITS HAVE BEEN PROVIDED TO THE CONTRACTOR ALONG WITH THESE PLANS AND SHALL BE KEPT ONSITE AT ALL TIMES. PRIOR TO COMMENCING WORK THE CONTRACTOR SHALL COORDINATE WITH THE ENGINEER TO VERIFY THE MOST RECENT COPY OF ALL APPLICABLE PERMITS HAVE BEEN PROVIDED.
4. HORIZONTAL COORDINATES AND ELEVATIONS ARE BASED ON NAD 1983 COORDINATES AND NAVD 1988 VERTICAL DATUM, RESPECTIVELY.
5. WHEN CONDITIONS IN THE FIELD DO NOT CONFORM WITH THE INFORMATION IN THESE PLANS AND/OR WHEN UNUSUAL CIRCUMSTANCES ARISE DURING CONSTRUCTION, THE CONTRACTOR SHALL IMMEDIATELY NOTIFY THE ENGINEER.
6. IF ANY ARTIFACTS OR OTHER MATERIALS ARE FOUND INDICATING POTENTIAL ARCHAEOLOGICAL OR HISTORICAL RESOURCES, WORK SHALL BE HALTED IMMEDIATELY AND THE CONTRACTOR SHALL NOTIFY THE ENGINEER.

811 Know what's below. Call before you dig.

LEGEND

EXISTING TREES
EXISTING PAVED ROAD
EXISTING GRAVEL ROAD
EXISTING CONTOURS (MAJOR) — 60
EXISTING CONTOURS (MINOR) — 61
EXISTING FENCE
EXISTING BUILDINGS & STRUCTURES
PROPOSED EARTHWORK
CONSTRUCTION BASELINE — 1+00
CONSTRUCTION AREA LIMITS
PROPOSED CONCRETE
PROPOSED NATIVE/SOIL MIX FILL
PROPOSED STAGING AREAS
PROPOSED ROCK PROTECTION
PROPOSED METAL GRATING
TREE PROTECTION FENCING

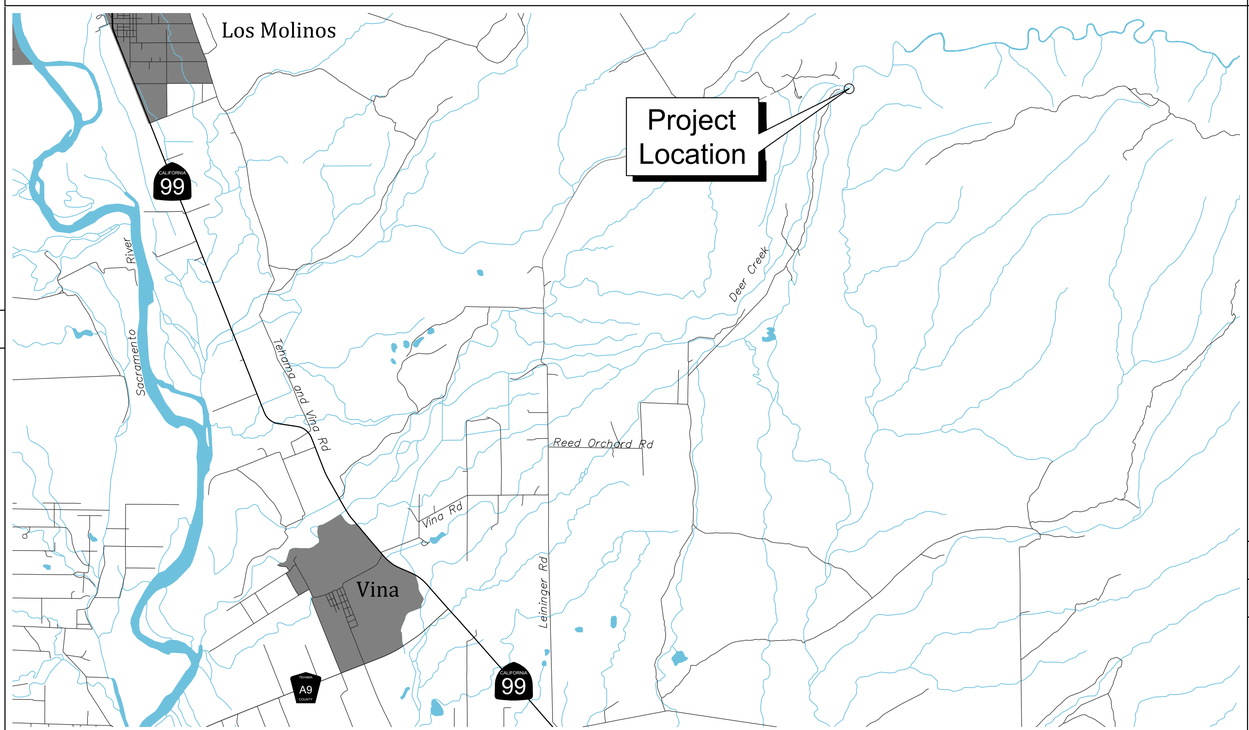

Vicinity Map

Project Location Map

Drawing Name				
DCID COVER				Date: 27 September 2017 08:34
P:\500100_Deer_Creek_DCID_Diversion\AC-500100.dwg				
Drawing Status: 100% Submittal	Designer: tvs	Drafter: tvs	Checked: bgw	Job Number: 50655

Sheet 1 of 25

Sheet Number: T1

SURVEY CONTROL POINT				
##	NORTHING	EASTING	ELEVATION	DESCRIPTION
105	1887630.959	6574578.712	483.2	HUB
106	1887666.177	6574388.078	483.7	HUB
107	1887707.162	6574145.771	477.1	HUB
112	1887313.615	6574153.971	472.7	REBAR
114	1887496.476	6573046.085	465.3	HUB
115	1887569.805	6573009.072	458.2	HUB
116	1887574.438	6573197.051	463.3	HUB
10000	1887166.145	6574166.730	495.3	REBAR

DEWATERING NOTES:

1. THE PROJECT SITE IS LOCATED WITHIN THE DEER CREEK STREAMBED AND DCID DIVERSION DITCH. THE CONTRACTOR WILL BE REQUIRED TO CONTROL WATER AT THE SITE. THE WORK AREA WILL NEED TO BE TEMPORARILY DEWATERED DURING CONSTRUCTION. THE CONTRACTOR WILL BE REQUIRED TO WORK WITH REGULATORY AGENCIES TO REMOVE AQUATIC SPECIES FROM THE DEWATERED AREA PRIOR TO, DURING, AND AFTER SITE DEWATERING. FLOWS AT THE SITE ARE LIKELY TO BE BETWEEN 50 CFS AND 350 CFS DURING CONSTRUCTION. THE CONTRACTOR WILL BE REQUIRED TO MAINTAIN A DIVERSION FLOW BETWEEN 22 AND 30 CFS TO THE DCID DITCH AND CONVEY THE REMAINING FLOW DOWNSTREAM OF THE SITE.
2. USGS MEASURES STREAMFLOW JUST UPSTREAM OF THE PROJECT SITE. USGS GAGE 11383500 DEER CREEK NEAR VINA CA PROVIDES BOTH CURRENT AND HISTORIC STREAMFLOW AT THE SITE.
3. TEMPORARY DITCHES AND CANALS SHALL BE LINED WITH 20 MIL PLASTIC SHEETING ACROSS THE ENTIRE WIDTH OF CHANNEL.
4. TEMPORARY BERMS OR DITCHES USED FOR DEWATERING THE SITE WILL BE COMPLETELY REMOVED AND THE GROUND RESTORED TO EXISTING ELEVATIONS AS APPROVED BY THE ENGINEER PRIOR TO DEMOBILIZATION FROM THE CONSTRUCTION SITE. TEMPORARY DITCHES SHALL BE FILLED WITH 12" STREAMBED COBBLE OVER 20 FOOT SECTIONS EVERY 200 FEET ALONG THE DITCH ALIGNMENT AS PART OF THE DEMOBILIZATION PROCESS. POLE CUTTING FENCES (SEE SHEET C4) SHALL BE CONSTRUCTED ACROSS THE TEMPORARY DITCH FOOTPRINT AT EVERY 200 FEET, AND AT LEAST 50 FEET AWAY FROM THE STREAMBED COBBLE FILL.
5. ALL DEWATERING AND REWATERING ACTIVITIES WILL BE CONDUCTED SLOWLY IN ORDER TO MINIMIZE DISTURBANCE TO FISH AND LOCAL SEDIMENT.
6. DIVERSION DAMS SHALL BE COMPLETELY REMOVED AFTER COMPLETION OF CONSTRUCTION AND AREAS RESTORED. TEMPORARY DIVERSION PIPES AND DITCHES SHALL BE BACKFILLED TO ORIGINAL GRADE OR HIGHER, WITH EROSION CONTROL INSTALLED AS SHOWN.

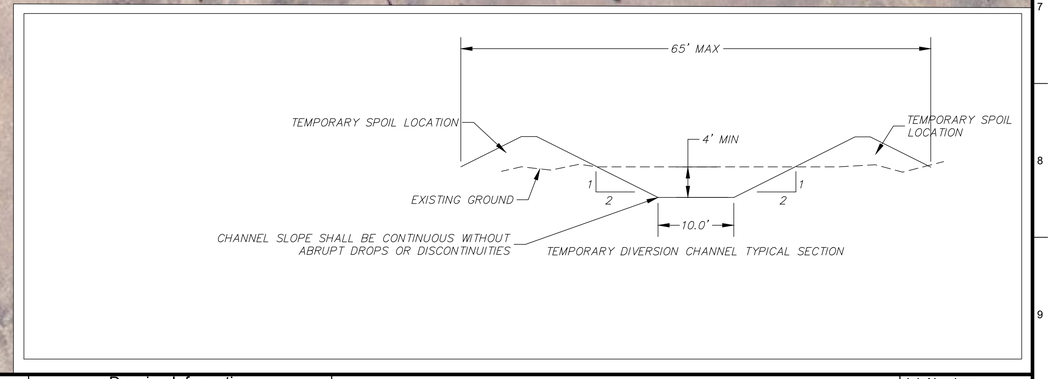

U.S. Fish & Wildlife Service
Red Bluff Fish & Wildlife Service
10950 Tyler Road
Red Bluff, California 96080
www.fws.gov/redbluff

nhc
northwest hydraulic consultants
2600 capitol avenue, suite 140
sacramento, california 95816–5928
phone: (916) 371–7400
fax: (916) 371–7475
www.nhcweb.com

REGISTERED PROFESSIONAL ENGINEER
BRIAN G. WARDMAN
No. 74371
Exp: 06/30/19
CIVIL
STATE OF CALIFORNIA

Revisions		
No.	Date	Description

Drawing Information	
Date	27 September 2017 08:34
Status	100% Submittal
Designer	bgw
Drafter	tvs
Checked	bgw
File Name	DCID
Plotted Scale	0 1/2 1

Deer Creek DCID Dam Fish Passage Project

Access & Control of Water Sheet

Job Number 500100

Sheet Number G1

DEER CREEK

EXISTING DAM
PROTECT IN PLACE

EXISTING DITCH WALL
PROTECT IN PLACE

REMOVE EXISTING CONCRETE
BANK PROTECTION

REMOVE EXISTING CONCRETE CHANNEL FLOOR

REMOVE EXISTING CONCRETE WALL

EXISTING CONCRETE WALL
PROTECT IN PLACE

465

470

REMOVE AND DISPOSE EXISTING BYPASS PIPE

REMOVE AND DISPOSE
EXISTING CONCRETE WALLS

EXISTING DIVERSION DITCH

112

EXISTING CONCRETE WALL
PROTECT IN PLACE

REMOVE AND SALVAGE EXISTING FISH SCREEN

EXISTING DIVERSION DITCH

480

485

490

495

500

N

0' 20' 40' 60' 80'

SCALE 1"=20'

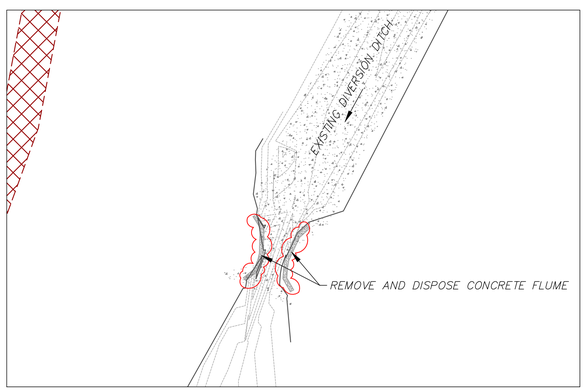

U.S. Fish & Wildlife Service
Red Bluff Fish & Wildlife Service
10950 Tyler Road
Red Bluff, California 96080
www.fws.gov/redbluff

nhc
northwest hydraulic consultants
2600 capitol avenue, suite 140
sacramento, california 95816-5928
phone: (916) 371-7400
fax: (916) 371-7475
www.nhcweb.com

REGISTERED PROFESSIONAL ENGINEER
BRIAN G. WARDMAN
No. 74371
Exp: 06/30/19
CIVIL
STATE OF CALIFORNIA

Revisions		
No.	Date	Description

Drawing Information	
Date	27 September 2017 08:34
Status	100% Submittal
Designer	bgw
Drafter	tvs
Checked	bgw
File Name	DCID
Plotted Scale	0 1/2 1 (08:34:14) P:\500100 Deer Creek DCID Passage\500100\data

Deer Creek DCID Dam
Fish Passage Project

Demolition Sheet

Job Number
500100

Sheet Number
G2

Sheet 3 of 25

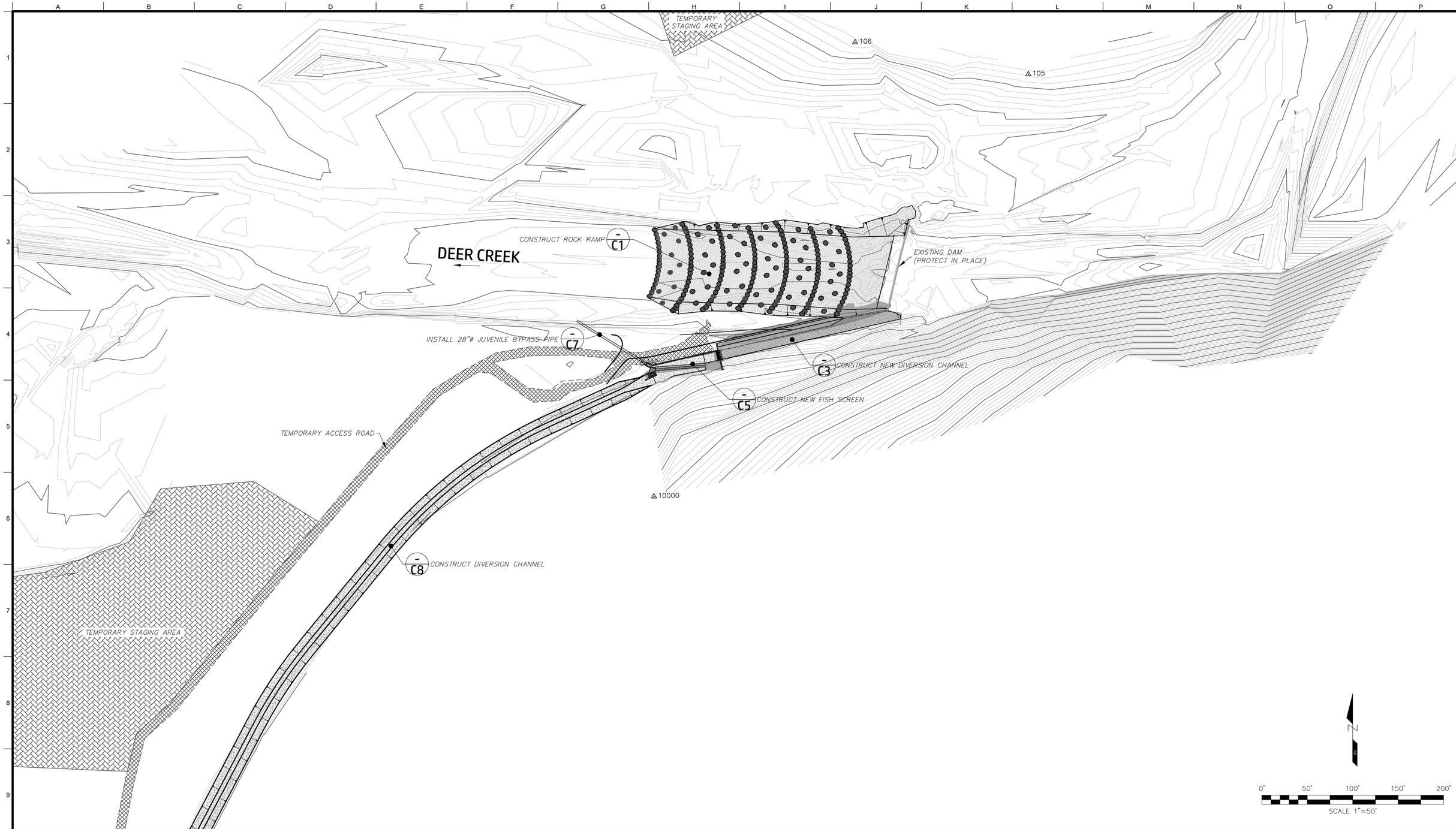

U.S. Fish & Wildlife Service
Red Bluff Fish & Wildlife Service
10950 Tyler Road
Red Bluff, California 96080
www.fws.gov/redbluff

nhc
northwest hydraulic consultants
2600 capitol avenue, suite 140
sacramento, california 95816-5928
phone: (916) 371-7400
fax: (916) 371-7475
www.nhcweb.com

REGISTERED PROFESSIONAL ENGINEER BRIAN G. WARDMAN No. 74371 Exp: 06/30/19 CIVIL STATE OF CALIFORNIA

Revisions		
No.	Date	Description

Drawing Information	
Date	27 September 2017 08:34
Status	100% Submittal
Designer	bgw
Drafter	tvs
Checked	bgw
File Name	DCID
Plotted Scale	0 1/2 1 (@ 34 in)

P:\500100_Deer_Creek_DCID_Diversion\dc-500100.dwg

Deer Creek DCID Dam Fish Passage Project

General Plan Sheet

Job Number
500100

Sheet Number
G3

Sheet 4 of 25

NOTES:
1. STREAMBED MATERIAL SHALL CONSIST OF 30% SEDIMENT, 45% 12" COBBLE, AND 25% ONE MAN BOULDERS.
2. ROCK WEIRS AND BOULDER CLUSTERS SHALL COMPRISE OF 5'ø STREAMBED BOULDERS AND 3'ø STREAMBED BOULDERS. SEE SHEET C2 FOR DETAILS.
3. A MINIMUM OF 9 BOULDER CLUSTERS WILL BE PLACED BETWEEN EACH ROCK WEIR. THE BOULDER CLUSTERS WILL BE PLACED IN AN IRREGULAR PATTER WITH NO LESS THAN 10 FEET AND NO MORE THAN 15 FEET SPACING ACROSS THE CHANNEL, WITH THE STATIONS VARYING BETWEEN 15 FEET TO 20 FEET FOR EACH CLUSTER.

DEER CREEK CENTERLINE		
STA	NORTHING	EASTING
6+00	1887402.235	6574512.013
1+00	1887439.535	6574013.405

STREAMBED SEDIMENT	
SIEVE SIZE	% PASSING^
2½"	99–100
2"	65–95
1"	50–85
#4	26–44
#40	16 (MAX)
#200	5.0–9.0

^–MEASURED BY WEIGHT
*–MEASURED BY SIZE

12" STREAMBED COBBLE	
APROX SIZE	% PASSING*
12"	99–100
10"	70–90
5"	30–60
¾"	10 (MAX)

STREAMBED BOULDERS	
ROCK	APROX SIZE
1 MAN	12"–18"

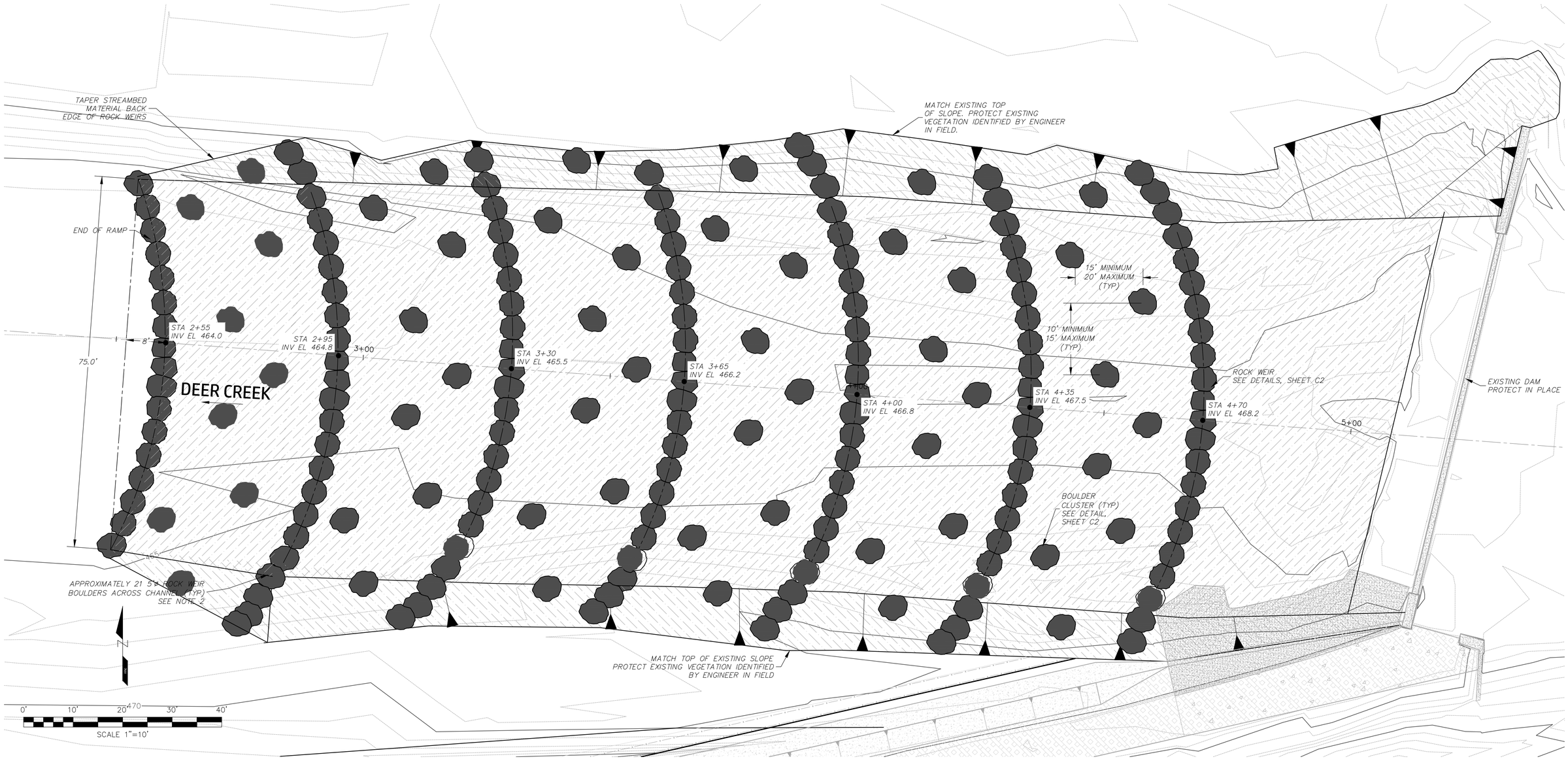

U.S. Fish & Wildlife Service
Red Bluff Fish & Wildlife Service
10950 Tyler Road
Red Bluff, California 96080
www.fws.gov/redbluff

nhc
northwest hydraulic consultants
2600 capitol avenue, suite 140
sacramento, california 95816–5928
phone: (916) 371–7400
fax: (916) 371–7475
www.nhcweb.com

REGISTERED PROFESSIONAL ENGINEER
BRIAN G. WARDMAN
No. 74371
Exp: 06/30/19
CIVIL
STATE OF CALIFORNIA

Revisions		
No.	Date	Description

Drawing Information	
Date	27 September 2017 08:34
Status	100% Submittal
Designer	
Drafter	
Checked	
File Name	DCID
Plotted Scale	0 1/2 1

Deer Creek DCID Dam Fish Passage Project

Rock Ramp Plan Sheet

Job Number
500100

Sheet Number
C1

Sheet 5 of 25

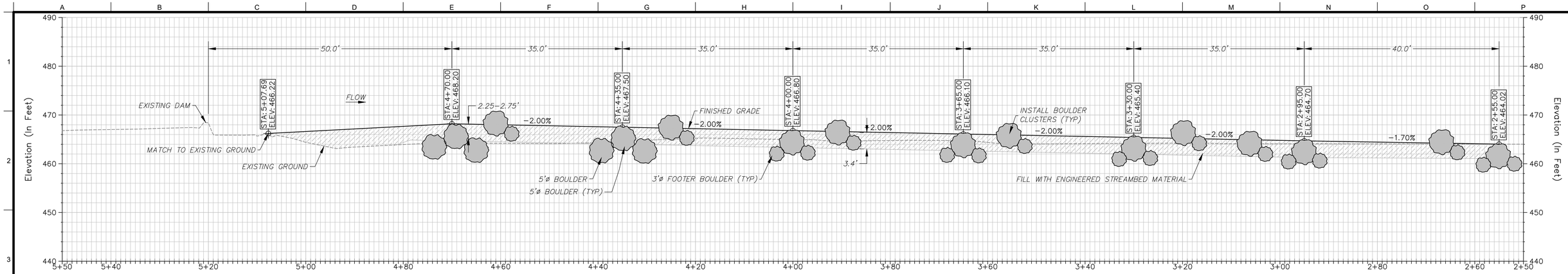

ROCK RAMP PROFILE
Scale: 1"=10'

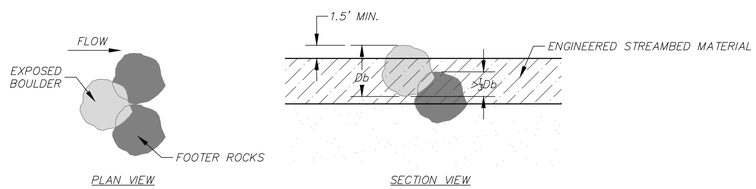

BOULDER CLUSTER
Not to Scale

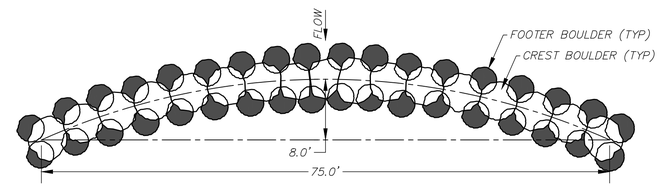

ROCK WEIR PLAN VIEW
Scale: 1"=10'

ROCK WEIR NOTES
1. ROCK WEIRS WILL SET GRADE THROUGHOUT THE ROUGHENED ROCK RAMP.
2. ROCK WEIRS WILL BE CONSTRUCTED USING MACHINE PLACED BOULDERS. CONTRACTOR SHALL INDIVIDUALLY SELECT BOULDERS BASED ON SIZE AND SHAPE TO FORM A STABLE STRUCTURE. CONTRACTOR TO FILL INTERSTITIAL SPACE WITH STREAMBED AGGREGATE.
3. BOULDERS WILL BE PLACED WITHIN 0.25 FEET IF DESIGN GRADE.
4. WITH THE EXCEPTION STATIONS 4+70 AND 4+35, 3 FOOT BOULDERS WILL BE USED AS FOOTER BOULDERS. 5 FOOT BOULDERS WILL BE USED AS FOOTER BOULDERS ON THE UPSTREAM 2 WEIRS.
5. FIVE FOOT BOULDERS WILL BE USED AS CREST BOULDERS AT STATION 4+70 AND 4+35.

TYPICAL SECTIONS

	ELEVATIONS			OFFSETS	
STATION	'A' (EL)	'B' (EL)	'C' (EL)	'X' (DIST)	'Y' (DIST)
4+70	469.0	468.7	468.2	25.0	25.0
4+35	468.3	468.0	467.5	25.0	25.0
4+00	467.6	467.3	466.8	25.0	25.0
3+65	466.9	466.6	466.1	26.5	23.5
3+30	466.2	465.9	465.4	28.5	21.5
3+20	465.9	465.6	465.1	28.9	21.0
2+95	465.5	465.2	464.7	30.0	20.0
2+55	464.8	464.5	464.0	30	20

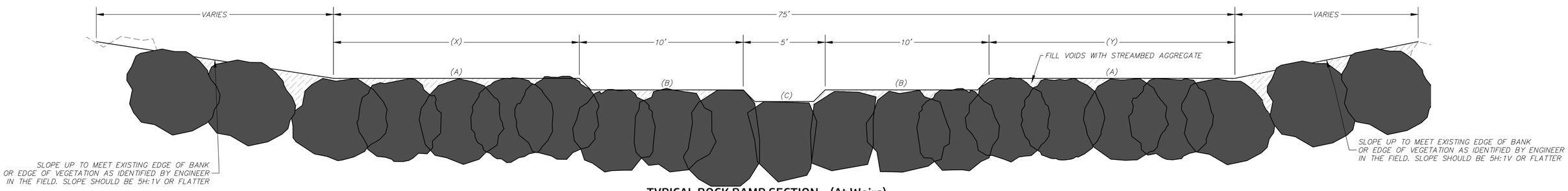

TYPICAL ROCK RAMP SECTION - (At Weirs)
Scale: 1"=3'

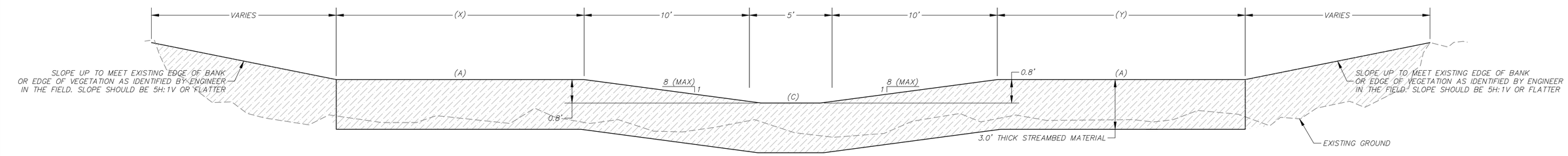

TYPICAL ROCK RAMP SECTION - (Between Weirs)
Scale: 1"=3'

U.S. Fish & Wildlife Service
Red Bluff Fish & Wildlife Service
10950 Tyler Road
Red Bluff, California 96080
www.fws.gov/redbluff

northwest hydraulic consultants
2600 capitol avenue, suite 140
sacramento, california 95816-5928
phone: (916) 371-7400
fax: (916) 371-7475
www.nhcweb.com

REGISTERED PROFESSIONAL ENGINEER BRIAN G. WARDMAN No. 74371 Exp: 06/30/19 CIVIL STATE OF CALIFORNIA

Revisions		
No.	Date	Description

Drawing Information	
Date	27 September 2017 08:34
Status	100% Submittal
Designer	bgw
Drafter	tvs
Checked	bgw
File Name	DCID
Plotted Scale	0 1/2 1 (@ 34 1/2")

P:\500100 Deer Creek DCID Dam\Models\500100.dwg

Deer Creek DCID Dam
Fish Passage Project

Rock Ramp Profile & Section Sheet

Job Number 500100

Sheet Number

C2

Sheet 6 of 25

DEER CREEK

3+00

4+00

5+00

1+00

465

470

473

480

485

490

495

500

ROCK RAMP (-/C1)

PLANT TWO ROWS OF POLE CUTTING FENCES 4 FEET APART (A/C4)

4.0' WIDE SLAB

FF 466.2

BEGIN CONCRETE CHANNEL STA 123+8

1+50

2+00

2+50

3+00

3+50

CONCRETE LINED CHANNEL

WALKWAY PLATFORM EL 474.0 (D/S3)

TW 477.0

4.0'

FC 465.9

FISH SCREEN (-/C5)

112

(A/S3) INSTALL TRASHRACK

INSTALL LADDER FSI INDUSTRIES D6WT

TW 477.0

HEADGATE STA 3+22.5

N

0' 10' 20' 30' 40'

SCALE 1"=10'

U.S. Fish & Wildlife Service
Red Bluff Fish & Wildlife Service
10950 Tyler Road
Red Bluff, California 96080
www.fws.gov/redbluff

nhc
northwest hydraulic consultants
2600 capitol avenue, suite 140
sacramento, california 95816-5928
phone: (916) 371-7400
fax: (916) 371-7475
www.nhcweb.com

REGISTERED PROFESSIONAL ENGINEER BRIAN G. WARDMAN No. 74371 Exp: 06/30/19 CIVIL STATE OF CALIFORNIA

Revisions		
No.	Date	Description

Drawing Information	
Date	27 September 2017 08:34
Status	100% Submittal
Designer	
Drafter	
Checked	
File Name	DCID
Plotted Scale	0 1/2 1 (08:34:14)

P:\500100 Deer Creek DCID Rehabilitation\500100.dwg

Deer Creek DCID Dam
Fish Passage Project

Diversion Intake Plan Sheet

Job Number 500100

Sheet Number

C3

Sheet 7 of 25

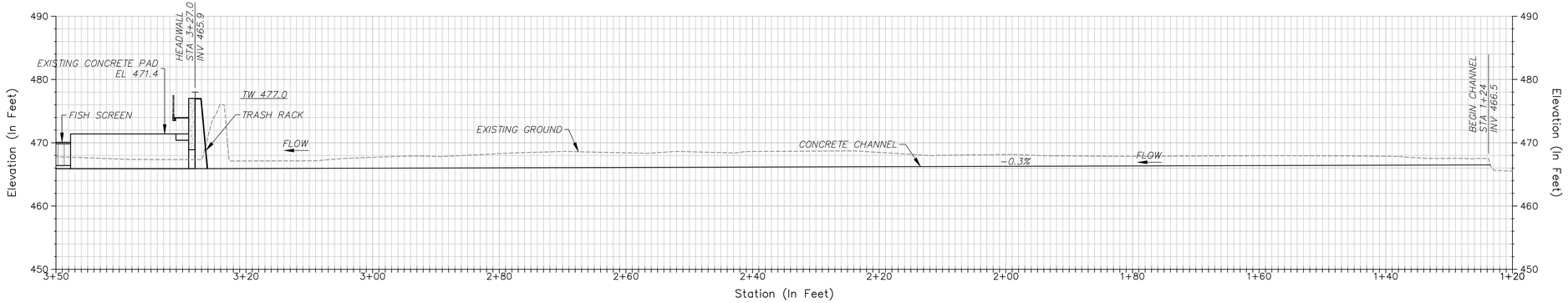

CONCRETE DIVERSION CHANNEL PROFILE

Scale: 1"=10'

HEADGATE NOTES:

1. WATERMAN GATES SHALL BE INSTALLED PER MANUFACTURER RECOMMENDATIONS.
2. WATERMAN SS-250 GATES TO BE SELF-CONTAINED WITH MANUAL HANDWHEEL HOIST.
3. WATERMAN SS-250 GATES SHALL BE INSTALLED WITH THE BOTTOM OF THE GATE MOUNTED FLUSH TO THE FLOOR.
4. WATERMAN SS-250 GATES SHALL BE CAPABLE OF OPERATING UNDER A 10 FOOT SEATING HEAD, AND A 7 FOOT UNSEATING HEAD.

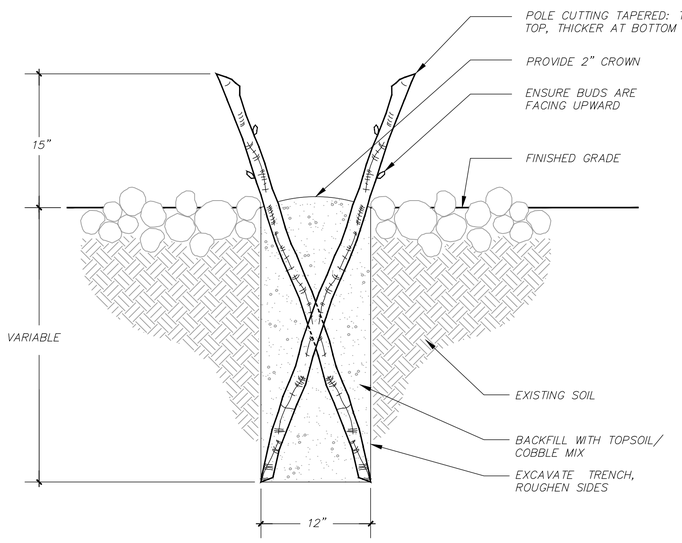

NOTES:

1. INSTALL 4 POLE CUTTINGS PER LINEAR FOOT, ALTERNATING SIDES EACH CUTTING
2. USE 48" POLE CUTTINGS ALONG DIVERSION DITCH; USE 72" POLE CUTTINGS ALONG TEMPORARY DIVERSION CHANNEL
3. EMBEDMENT DEPTH SHALL BE 30" FOR 48" POLE CUTTINGS
4. EMBEDMENT DEPTH SHALL BE 54" FOR 72" POLE CUTTINGS
5. POLE CUTTINGS SHALL BE EITHER SALIX LASIOLEPIS (ARROYO WILLOW) OR SALIX EXIGUA (SANDBAR WILLOW), A MIXTURE OF THE TWO, OR APPROVED EQUIVALENT

A/C4 POLE CUTTING FENCE

Not to Scale

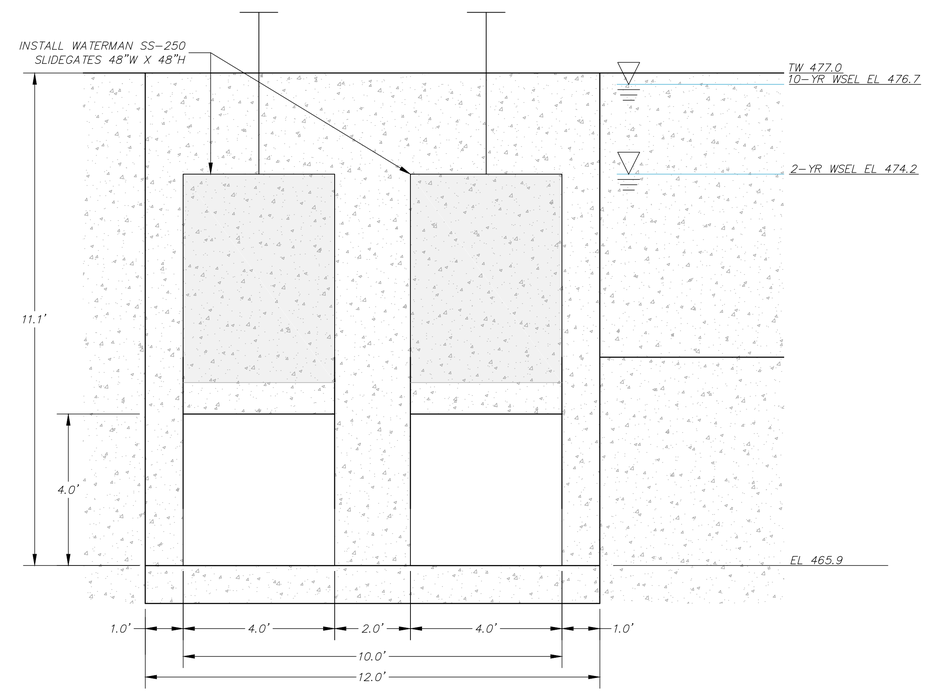

HEADGATE

Scale: 1"=2'

U.S. Fish & Wildlife Service
Red Bluff Fish & Wildlife Service
10950 Tyler Road
Red Bluff, California 96080
www.fws.gov/redbluff

nhc northwest hydraulic consultants
2600 capitol avenue, suite 140
sacramento, california 95816-5928
phone: (916) 371-7400
fax: (916) 371-7475
www.nhcweb.com

REGISTERED PROFESSIONAL ENGINEER BRIAN G. WARDMAN No. 74371 Exp: 06/30/19 CIVIL STATE OF CALIFORNIA

Revisions		
No.	Date	Description

Drawing Information	
Date	27 September 2017 08:34
Status	100% Submittal
Designer	
Drafter	
Checked	
File Name	DCID
Plotted Scale	0 1/2 1

P:\500100 Deer Creek DCID Dam\500100.dwg

Deer Creek DCID Dam
Fish Passage Project

Diversion Intake Profile & Details Sheet

Job Number 500100

Sheet Number C4

Sheet 8 of 25

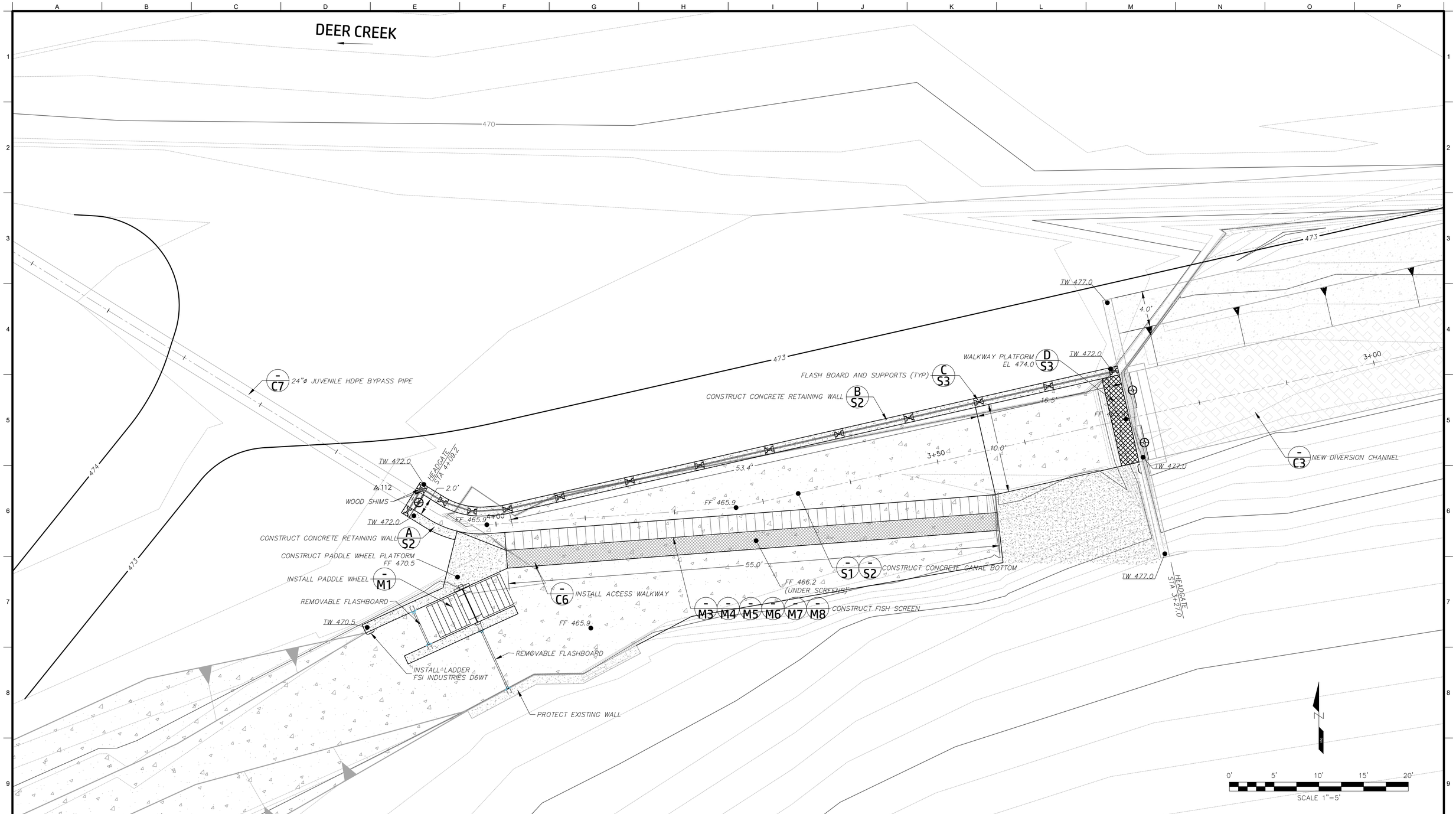

U.S. Fish & Wildlife Service
Red Bluff Fish & Wildlife Service
10950 Tyler Road
Red Bluff, California 96080
www.fws.gov/redbluff

nhc
northwest hydraulic consultants
2600 capitol avenue, suite 140
sacramento, california 95816–5928
phone: (916) 371–7400
fax: (916) 371–7475
www.nhcweb.com

REGISTERED PROFESSIONAL ENGINEER
BRIAN G. WARDMAN
No. 74371
Exp: 06/30/19
CIVIL
STATE OF CALIFORNIA

Revisions		
No.	Date	Description

Drawing Information	
Date	27 September 2017 08:34
Status	100% Submittal
Designer	
Drafter	
Checked	
File Name	DCID
Plotted Scale	0 1/2 1

Deer Creek DCID Dam Fish Passage Project

Fish Screen Plan Sheet

Job Number
500100

Sheet Number
C5

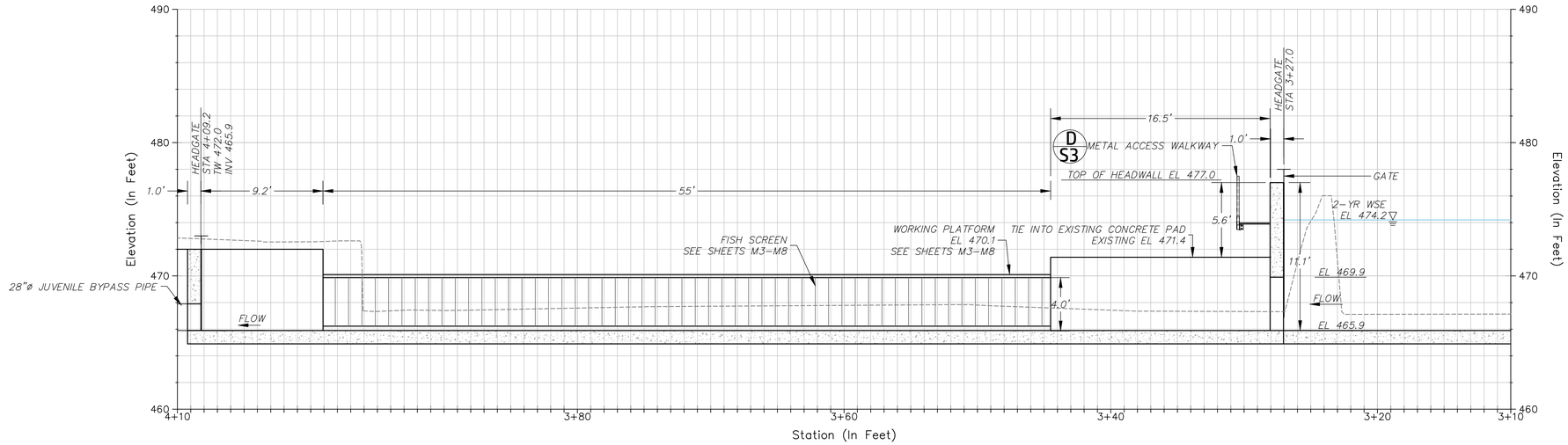

FISH SCREEN PROFILE

Scale: 1"=5'

U.S. Fish & Wildlife Service
Red Bluff Fish & Wildlife Service
10950 Tyler Road
Red Bluff, California 96080
www.fws.gov/redbluff

northwest hydraulic consultants
2600 capitol avenue, suite 140
sacramento, california 95816-5928
phone: (916) 371-7400
fax: (916) 371-7475
www.nhcweb.com

REGISTERED PROFESSIONAL ENGINEER
BRIAN G. WARDMAN
No. 74371
Exp: 06/30/19
CIVIL
STATE OF CALIFORNIA

Revisions		
No.	Date	Description

Drawing Information	
Date	27 September 2017 08:34
Status	100% Submittal
Designer	
Drafter	
Checked	
File Name	DCID
Plotted Scale	0 1/2 1

Deer Creek DCID Dam
Fish Passage Project

Fish Screen Profile Sheet

Job Number
500100

Sheet Number
C6

Sheet 10 of 25

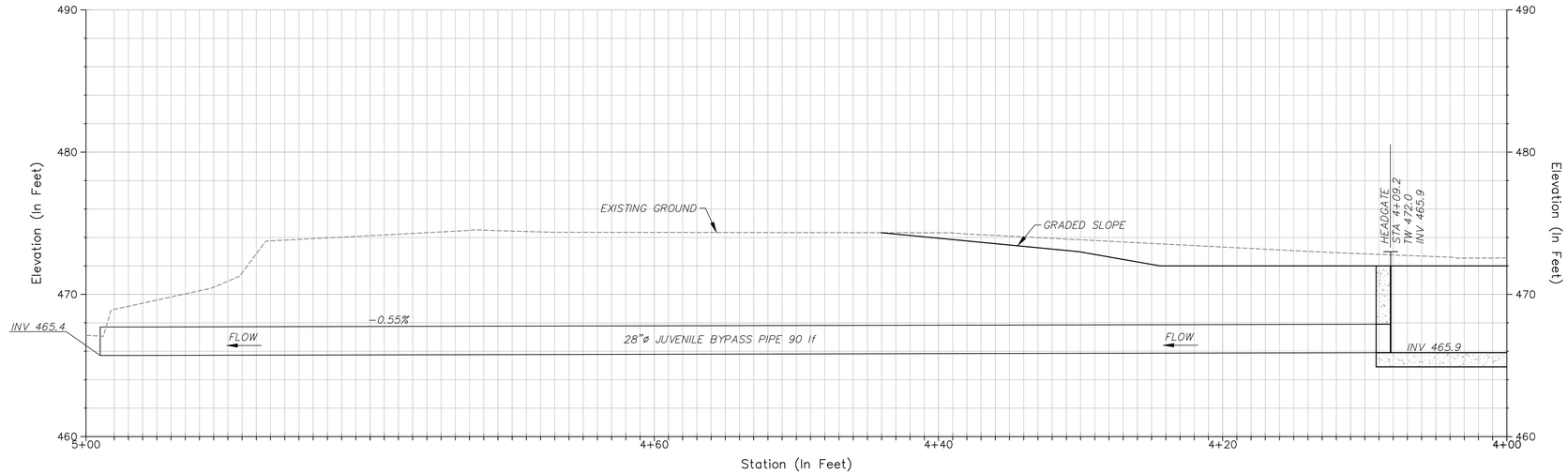

JUVENILE BYPASS PIPE PROFILE

Scale: 1"=5'

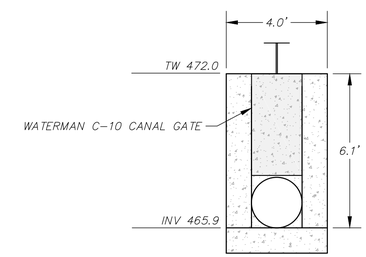

JUVENILE BYPASS HEADGATE

Scale: 1"=3'

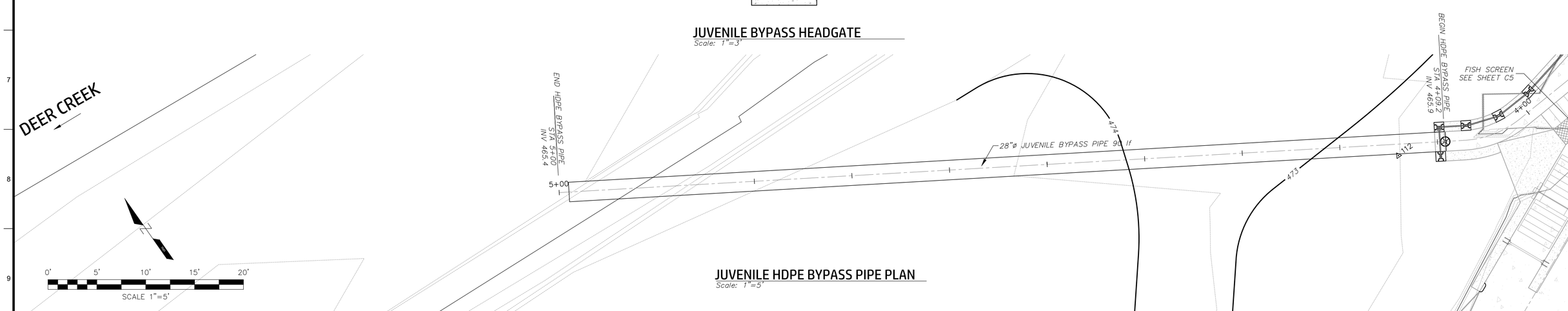

JUVENILE HDPE BYPASS PIPE PLAN

Scale: 1"=5'

U.S. Fish & Wildlife Service
Red Bluff Fish & Wildlife Service
10950 Tyler Road
Red Bluff, California 96080
www.fws.gov/redbluff

nhc
northwest hydraulic consultants
2600 capitol avenue, suite 140
sacramento, california 95816-5928
phone: (916) 371-7400
fax: (916) 371-7475
www.nhcweb.com

REGISTERED PROFESSIONAL ENGINEER
BRIAN G. WARNOCK
No. 74371
Exp: 06/30/19
CIVIL
STATE OF CALIFORNIA

Revisions		
No.	Date	Description

Drawing Information	
Date	27 September 2017 08:34
Status	100% Submittal
Designer	
Drafter	
Checked	
File Name	DCID
Plotted Scale	0 1/2 1 (08:34:14)

P:\500100 Deer Creek DCID Rehabilitation\500100.dwg

Deer Creek DCID Dam Fish Passage Project

Juvenile Bypass Plan & Profile Sheet

Job Number
500100

Sheet Number
C7

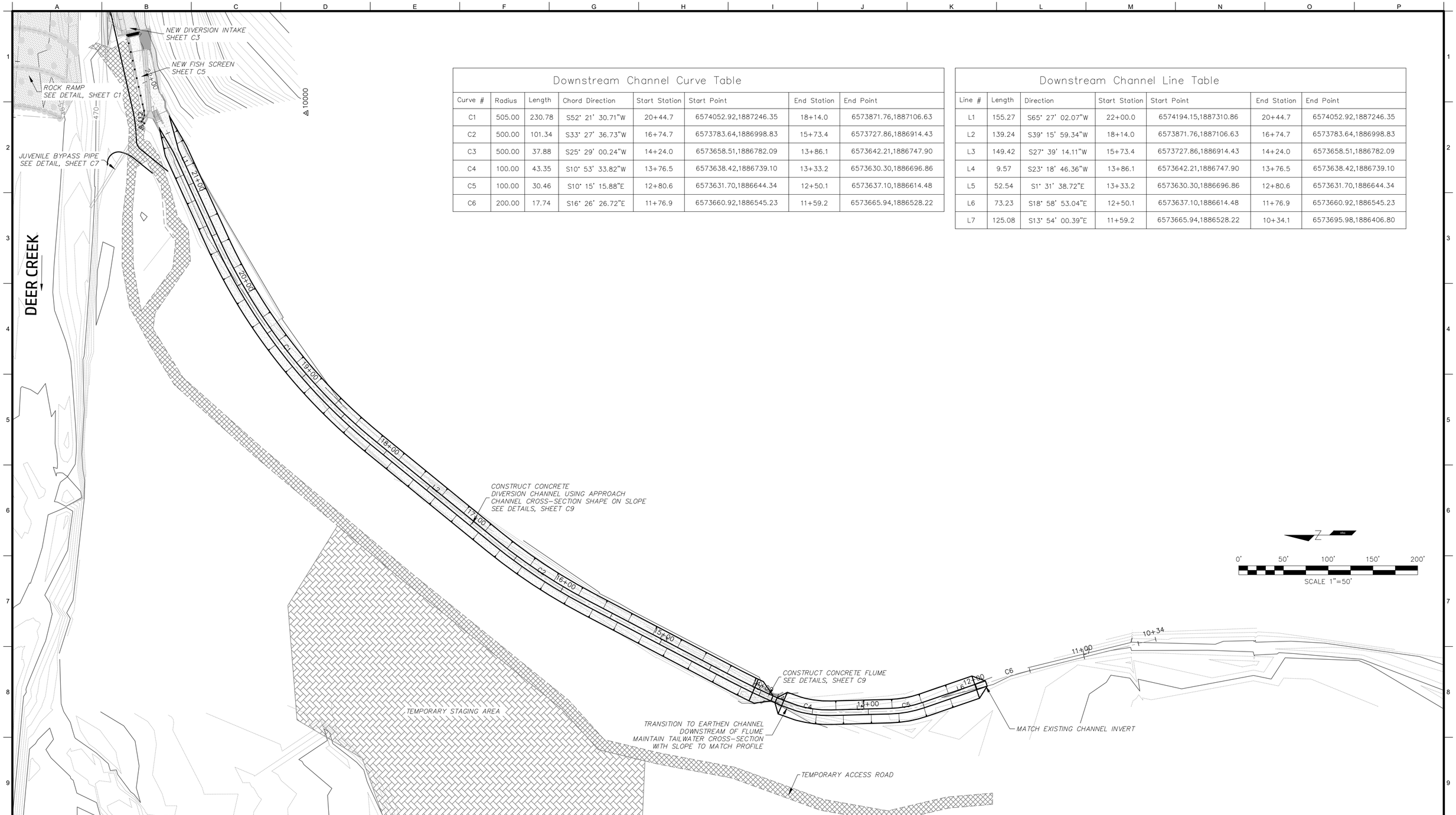

Downstream Channel Curve Table

Curve #	Radius	Length	Chord Direction	Start Station	Start Point	End Station	End Point
C1	505.00	230.78	S52° 21' 30.71"W	20+44.7	6574052.92,1887246.35	18+14.0	6573871.76,1887106.63
C2	500.00	101.34	S33° 27' 36.73"W	16+74.7	6573783.64,1886998.83	15+73.4	6573727.86,1886914.43
C3	500.00	37.88	S25° 29' 00.24"W	14+24.0	6573658.51,1886782.09	13+86.1	6573642.21,1886747.90
C4	100.00	43.35	S10° 53' 33.82"W	13+76.5	6573638.42,1886739.10	13+33.2	6573630.30,1886696.86
C5	100.00	30.46	S10° 15' 15.88"E	12+80.6	6573631.70,1886644.34	12+50.1	6573637.10,1886614.48
C6	200.00	17.74	S16° 26' 26.72"E	11+76.9	6573660.92,1886545.23	11+59.2	6573665.94,1886528.22

Downstream Channel Line Table

Line #	Length	Direction	Start Station	Start Point	End Station	End Point
L1	155.27	S65° 27' 02.07"W	22+00.0	6574194.15,1887310.86	20+44.7	6574052.92,1887246.35
L2	139.24	S39° 15' 59.34"W	18+14.0	6573871.76,1887106.63	16+74.7	6573783.64,1886998.83
L3	149.42	S27° 39' 14.11"W	15+73.4	6573727.86,1886914.43	14+24.0	6573658.51,1886782.09
L4	9.57	S23° 18' 46.36"W	13+86.1	6573642.21,1886747.90	13+76.5	6573638.42,1886739.10
L5	52.54	S1° 31' 38.72"E	13+33.2	6573630.30,1886696.86	12+80.6	6573631.70,1886644.34
L6	73.23	S18° 58' 53.04"E	12+50.1	6573637.10,1886614.48	11+76.9	6573660.92,1886545.23
L7	125.08	S13° 54' 00.39"E	11+59.2	6573665.94,1886528.22	10+34.1	6573695.98,1886406.80

U.S. Fish & Wildlife Service
Red Bluff Fish & Wildlife Service
10950 Tyler Road
Red Bluff, California 96080
www.fws.gov/redbluff

nhc
northwest hydraulic consultants
2600 capitol avenue, suite 140
sacramento, california 95816-5928
phone: (916) 371-7400
fax: (916) 371-7475
www.nhcweb.com

REGISTERED PROFESSIONAL ENGINEER
BRIAN G. WARDMAN
No. 74371
Exp: 06/30/19
CIVIL
STATE OF CALIFORNIA

Revisions		
No.	Date	Description

Drawing Information	
Date	27 September 2017 08:34
Status	100% Submittal
Designer	
Drafter	
Checked	
File Name	DCID
Plotted Scale	0 1/2 1 (0.34 in)

P:\500100_Deer_Creek_DCID_Diversion\dc500100.dwg

Deer Creek DCID Dam
Fish Passage Project

Diversion Ditch Plan Sheet

Job Number
500100

Sheet Number
C8

Sheet 12 of 25

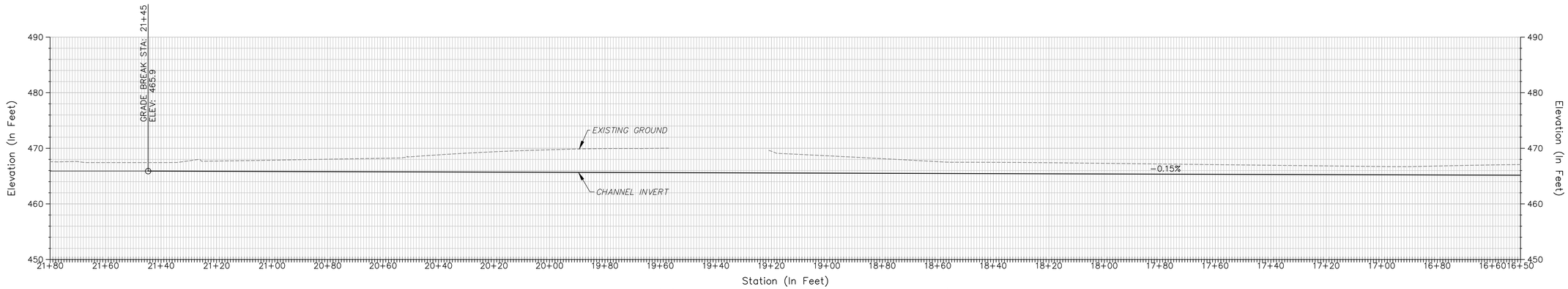

DIVERSION CHANNEL PROFILE (STA 21+80 - 16+50)

Scale: H: 1"=10' V: 1"=20'

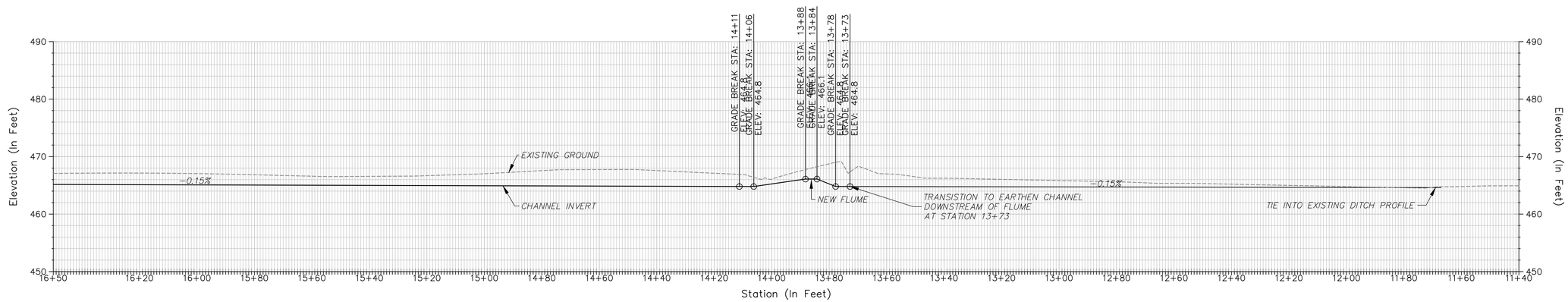

DIVERSION CHANNEL PROFILE (STA 16+50 - 11+40)

Scale: H: 1"=10' V: 1"=20'

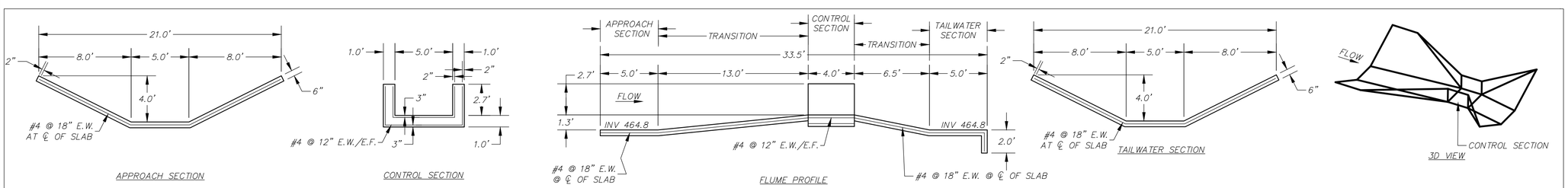

FLUME SECTIONS

Scale: 1"=5'

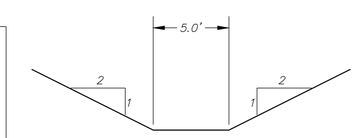

EARTH LINE CHANNEL SECTION

Scale: 1"=5'

U.S. Fish & Wildlife Service
Red Bluff Fish & Wildlife Service
10950 Tyler Road
Red Bluff, California 96080
www.fws.gov/redbluff

nhc northwest hydraulic consultants
2600 capitol avenue, suite 140
sacramento, california 95816-5928
phone: (916) 371-7400
fax: (916) 371-7475
www.nhcweb.com

REGISTERED PROFESSIONAL ENGINEER BRIAN G. WARDMAN No. 74371 Exp: 06/30/19 CIVIL STATE OF CALIFORNIA

Revisions		
No.	Date	Description

Drawing Information	
Date	27 September 2017 08:34
Status	100% Submittal
Designer	
Drafter	
Checked	
File Name	DCID
Plotted Scale	0 1/2 1

Deer Creek DCID Dam
Fish Passage Project

Diversion Ditch Profile & Sections Sheet

Job Number 500100

Sheet Number C9

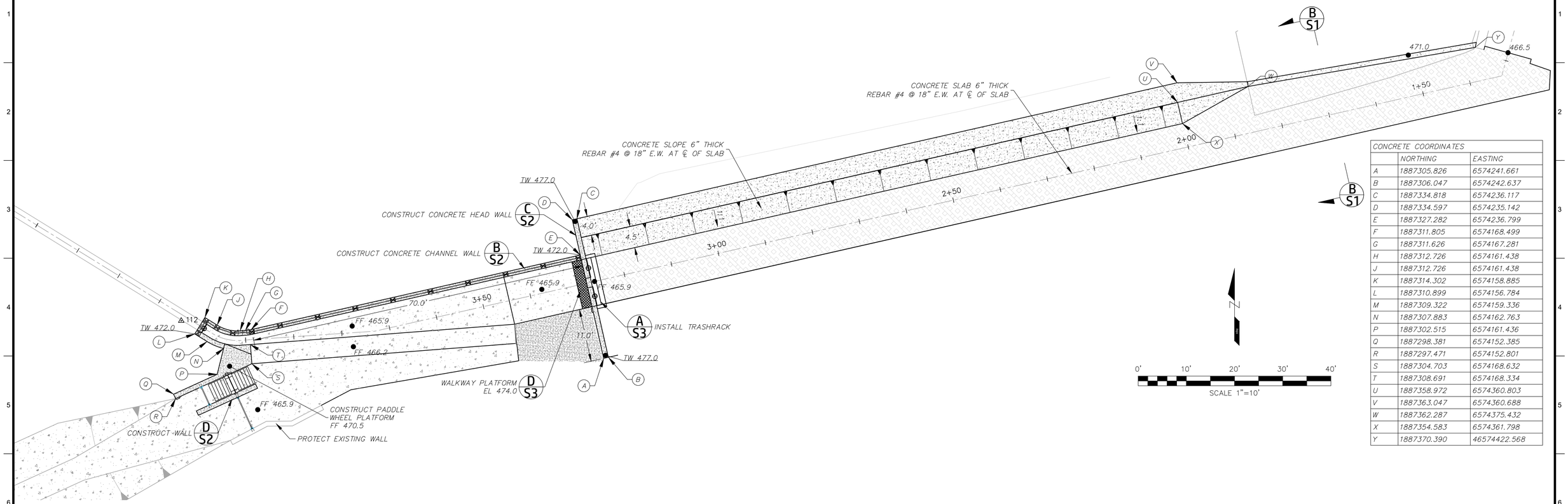

CONCRETE COORDINATES		
	NORTHING	EASTING
A	1887305.826	6574241.661
B	1887306.047	6574242.637
C	1887334.818	6574236.117
D	1887334.597	6574235.142
E	1887327.282	6574236.799
F	1887311.805	6574168.499
G	1887311.626	6574167.281
H	1887312.726	6574161.438
J	1887312.726	6574161.438
K	1887314.302	6574158.885
L	1887310.899	6574156.784
M	1887309.322	6574159.336
N	1887307.883	6574162.763
P	1887302.515	6574161.436
Q	1887298.381	6574152.385
R	1887297.471	6574152.801
S	1887304.703	6574168.632
T	1887308.691	6574168.334
U	1887358.972	6574360.803
V	1887363.047	6574360.688
W	1887362.287	6574375.432
X	1887354.583	6574361.798
Y	1887370.390	46574422.568

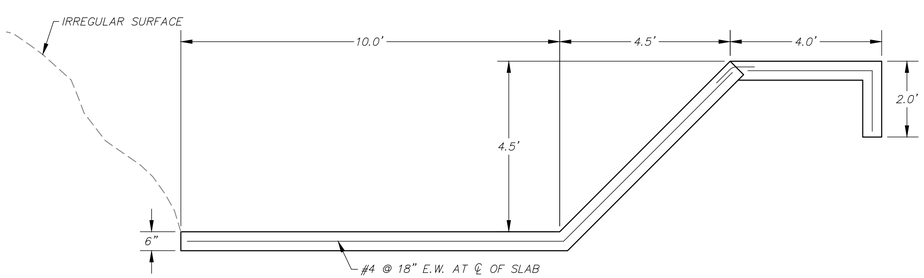

A S1 SECTION
Not to Scale

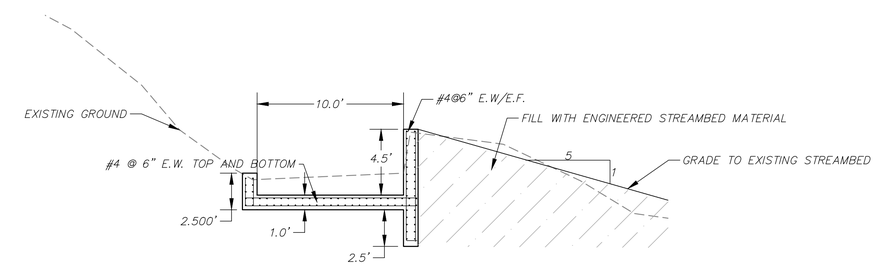

B S1 CONCRETE SLAB CONNECTION
Not to Scale

U.S. Fish & Wildlife Service
Red Bluff Fish & Wildlife Service
10950 Tyler Road
Red Bluff, California 96080
www.fws.gov/redbluff

nhc
northwest hydraulic consultants
2600 capitol avenue, suite 140
sacramento, california 95816–5928
phone: (916) 371–7400
fax: (916) 371–7475
www.nhcweb.com

REGISTERED PROFESSIONAL ENGINEER
BRIAN G. WARDMAN
No. 74371
Exp: 06/30/19
CIVIL
STATE OF CALIFORNIA

Revisions		
No.	Date	Description

Drawing Information	
Date	27 September 2017 08:34
Status	100% Submittal
Designer	
Drafter	
Checked	
File Name	DCID
Plotted Scale	0 1/2 1

Deer Creek DCID Dam Fish Passage Project

Structural Plan Sheet

Job Number 500100

Sheet Number

S1

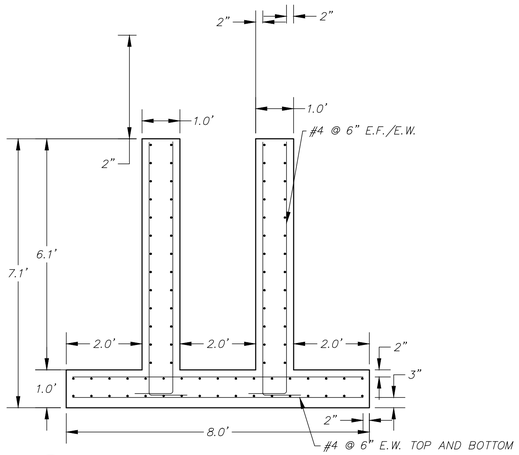

A S2 BYPASS CHANNEL WALL SECTION
Scale: 1"=2'

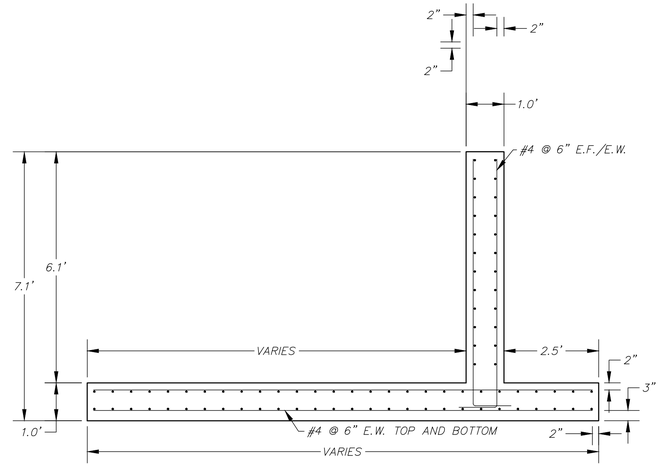

B S2 WIDE CHANNEL WALL SECTION
Scale: 1"=2'

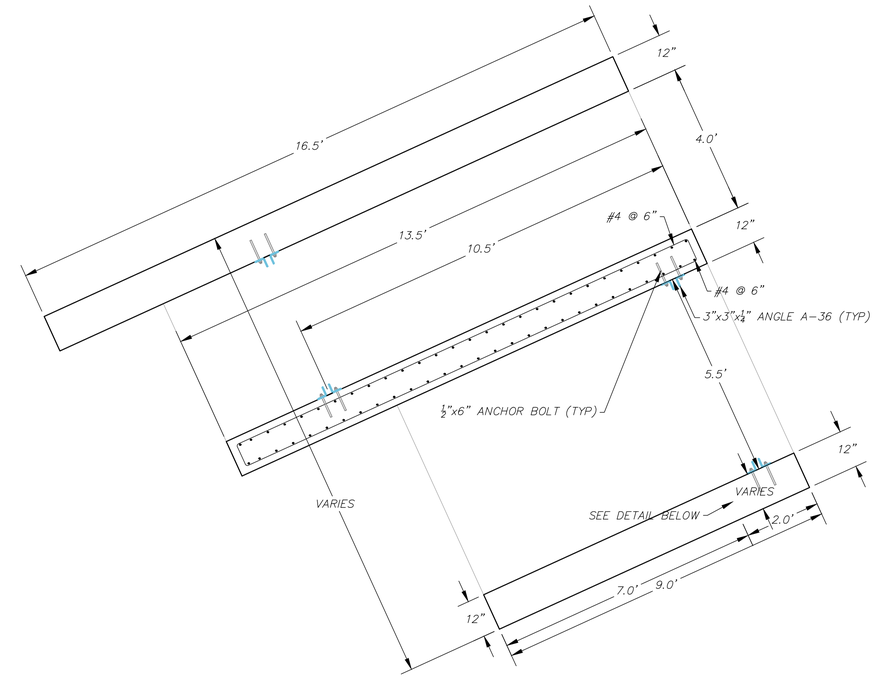

D S2 FLASHBOARDS
Scale: 1"=2'

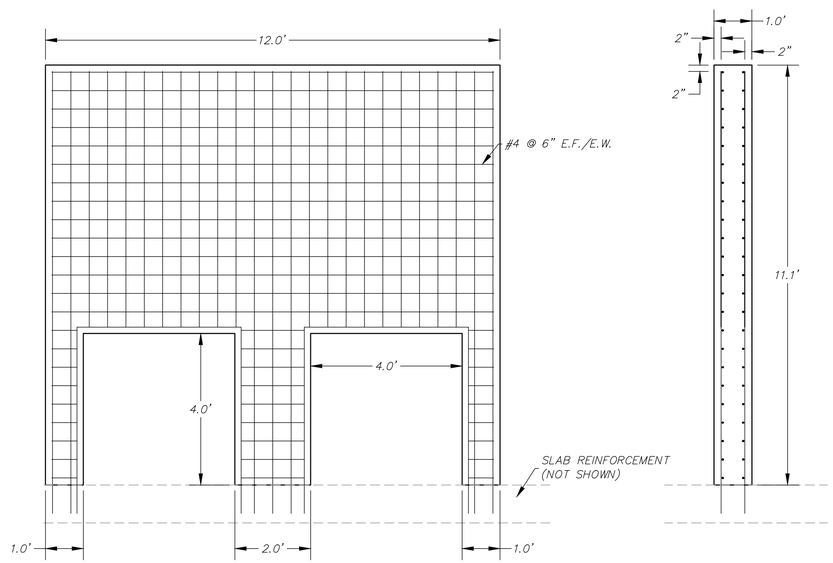

C S2 HEAD WALL SECTION
Scale: 1"=2'

U.S. Fish & Wildlife Service
Red Bluff Fish & Wildlife Service
10950 Tyler Road
Red Bluff, California 96080
www.fws.gov/redbluff

nhc
northwest hydraulic consultants
2600 capitol avenue, suite 140
sacramento, california 95816-5928
phone: (916) 371-7400
fax: (916) 371-7475
www.nhcweb.com

REGISTERED PROFESSIONAL ENGINEER
BRIAN G. WARDMAN
No. 74371
Exp: 06/30/19
CIVIL
STATE OF CALIFORNIA

Revisions		
No.	Date	Description

Drawing Information	
Date	27 September 2017 08:33
Status	100% Submittal
Designer	
Drafter	
Checked	
File Name	DCID STRUCT
Plotted Scale	0 1/2 1

Deer Creek DCID Dam
Fish Passage Project
Fish Screen Bay
Structural Detail Sheet

Job Number
500100

Sheet Number
S2

Sheet 15 of 25

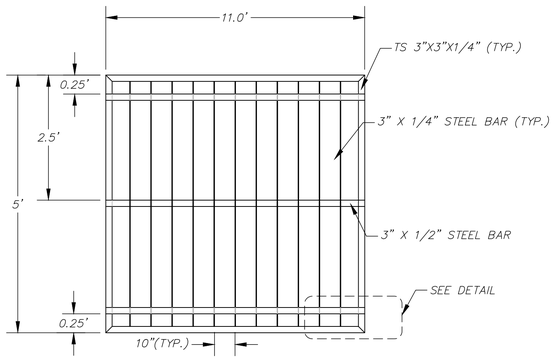

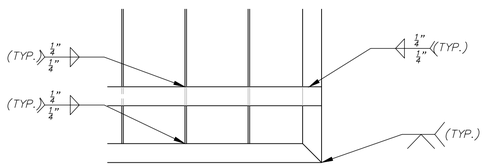

TRASH RACK DETAIL

A/S3 FRONT VIEW TRASH RACK
Not to Scale

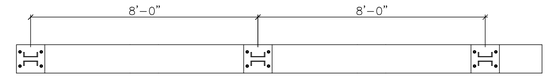

PLAN VIEW

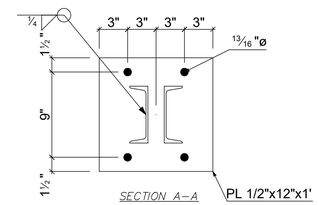

SECTION A–A

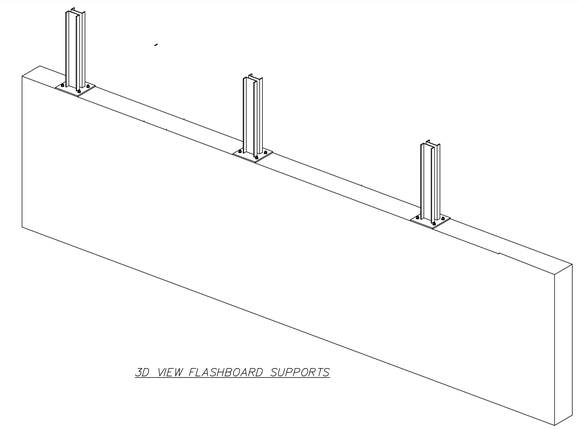

3D VIEW FLASHBOARD SUPPORTS

C/S3 FLASH BOARD SUPPORT
Scale: 1"=2'

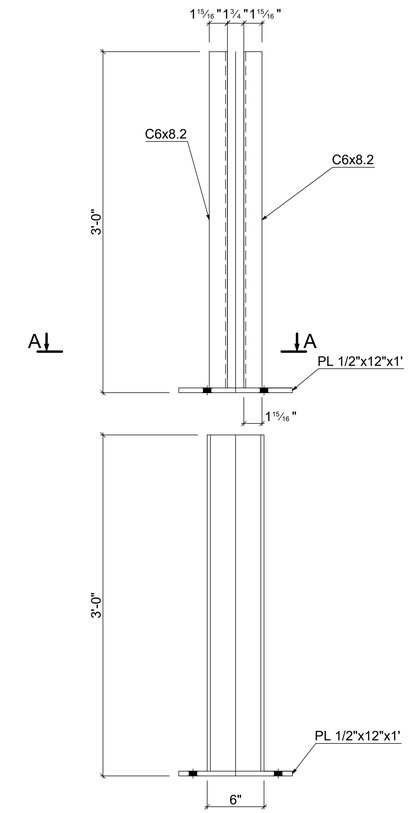

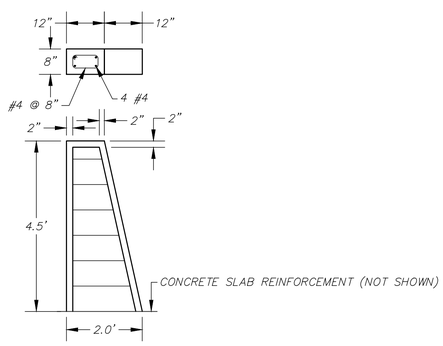

B/S3 TRASH RACK SUPPORT
Scale: 1"=2'

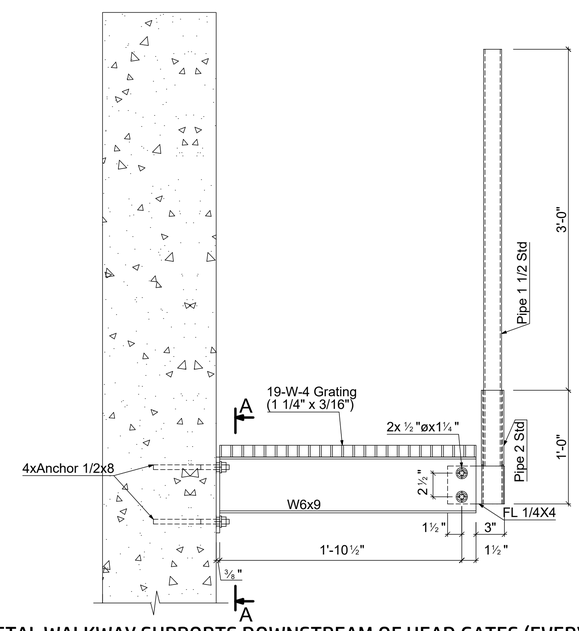

D/S3 METAL WALKWAY SUPPORTS DOWNSTREAM OF HEAD GATES (EVERY 5 FT TYP)
Scale: N.T.S.

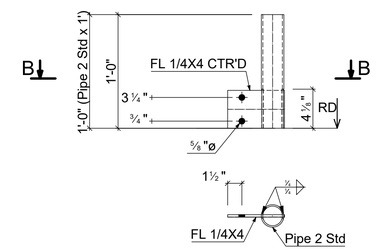

Section B - B

HANDRAIL SOCKET
Scale: N.T.S.

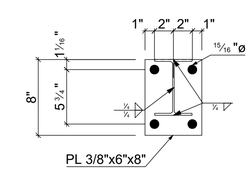

Section A - A

U.S. Fish & Wildlife Service
Red Bluff Fish & Wildlife Service
10950 Tyler Road
Red Bluff, California 96080
www.fws.gov/redbluff

nhc northwest hydraulic consultants
2600 capitol avenue, suite 140
sacramento, california 95816–5928
phone: (916) 371–7400
fax: (916) 371–7475
www.nhcweb.com

REGISTERED PROFESSIONAL ENGINEER BRIAN G. WARDMAN No. 74371 Exp: 06/30/19 CIVIL STATE OF CALIFORNIA

Revisions		
No.	Date	Description

Drawing Information	
Date	27 September 2017 08:33
Status	100% Submittal
Designer	
Drafter	
Checked	
File Name	DCID STRUCT
Plotted Scale	0 1/2 1

Deer Creek DCID Dam
Fish Passage Project
Trash Rack
Structural Detail Sheet

Job Number 500100

Sheet Number

S3

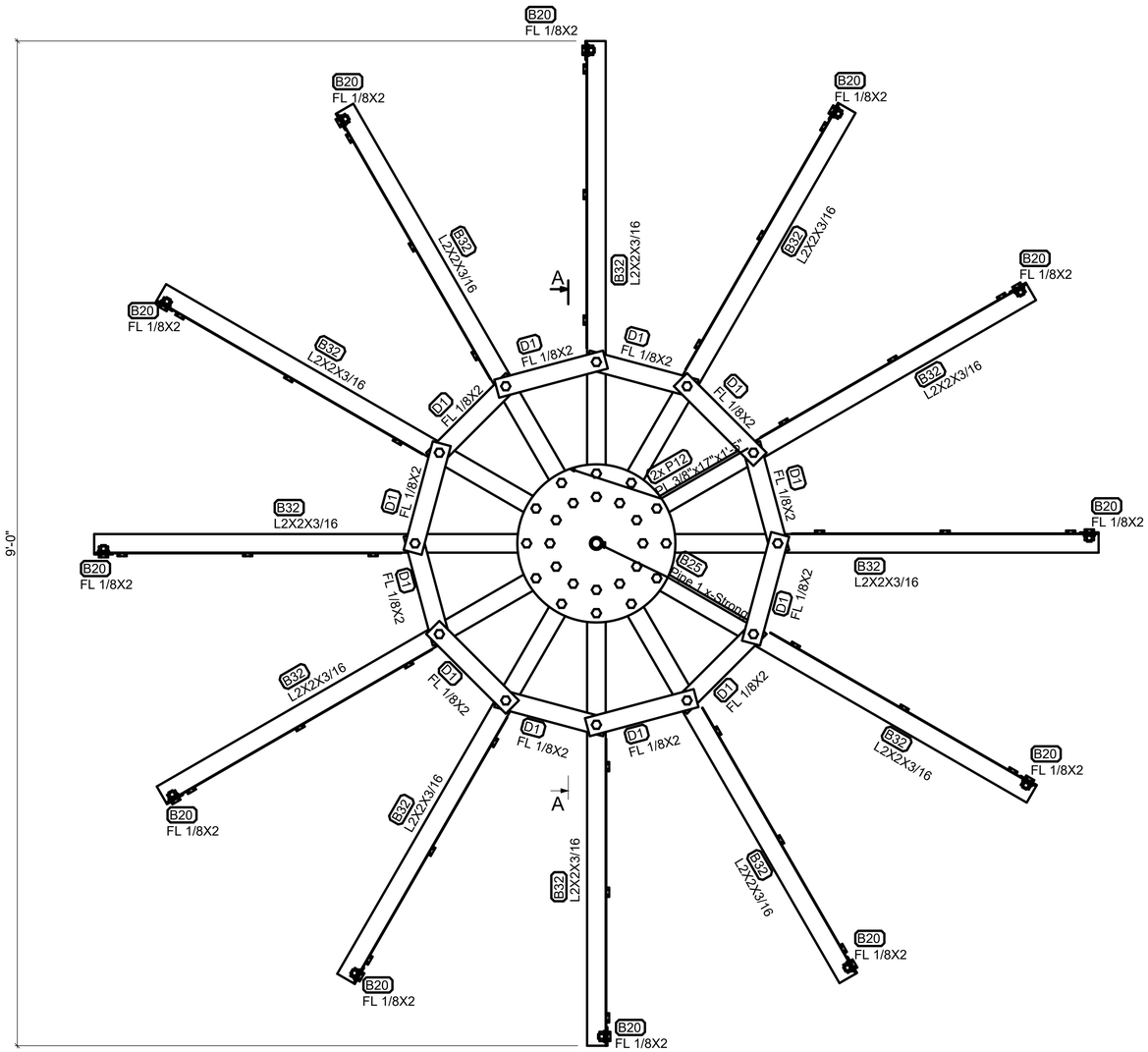

ELEVATION VIEW

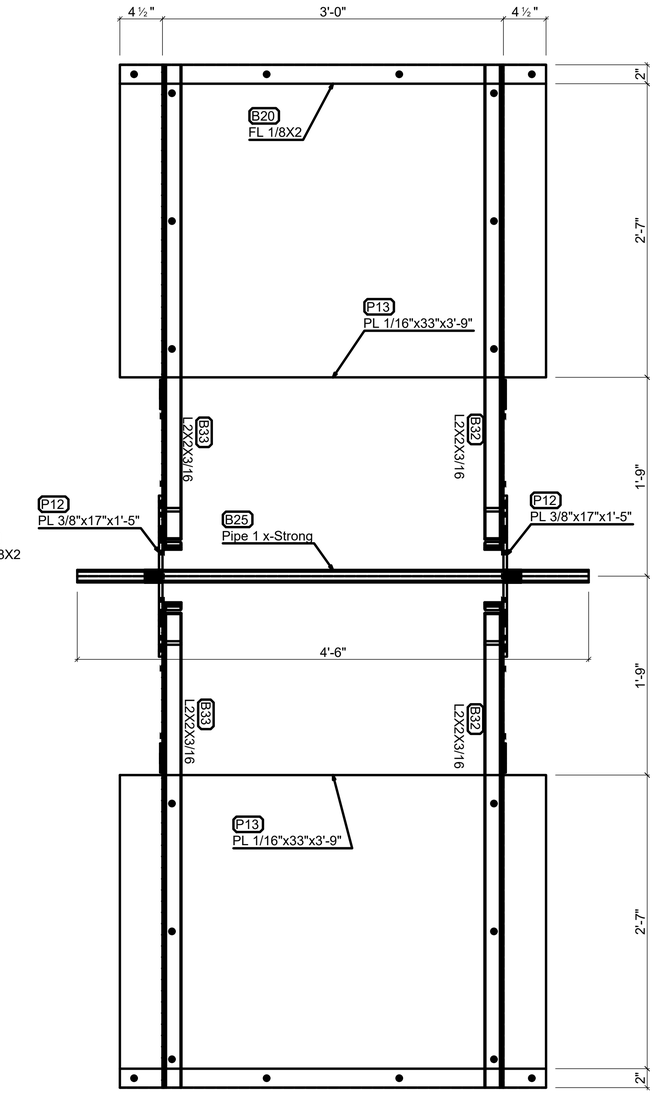

SECTION A-A

U.S. Fish & Wildlife Service
Red Bluff Fish & Wildlife Service
10950 Tyler Road
Red Bluff, California 96080
www.fws.gov/redbluff

nhc
northwest hydraulic consultants
2600 capitol avenue, suite 140
sacramento, california 95816–5928
phone: (916) 371–7400
fax: (916) 371–7475
www.nhcweb.com

REGISTERED PROFESSIONAL ENGINEER
BRIAN G. WARDMAN
No. 74371
Exp: 06/30/19
CIVIL
STATE OF CALIFORNIA

Revisions		
No.	Date	Description

Drawing Information	
Date	27 September 2017 08:33
Status	100% Submittal
Designer	
Drafter	
Checked	
File Name	DCID MECHANICAL
Plotted Scale	0 1/2 1 (08:33:01)

Deer Creek DCID Dam
Fish Passage Project

Paddlewheel Assembly

Job Number
500100

Sheet Number
M1

Sheet 17 of 25

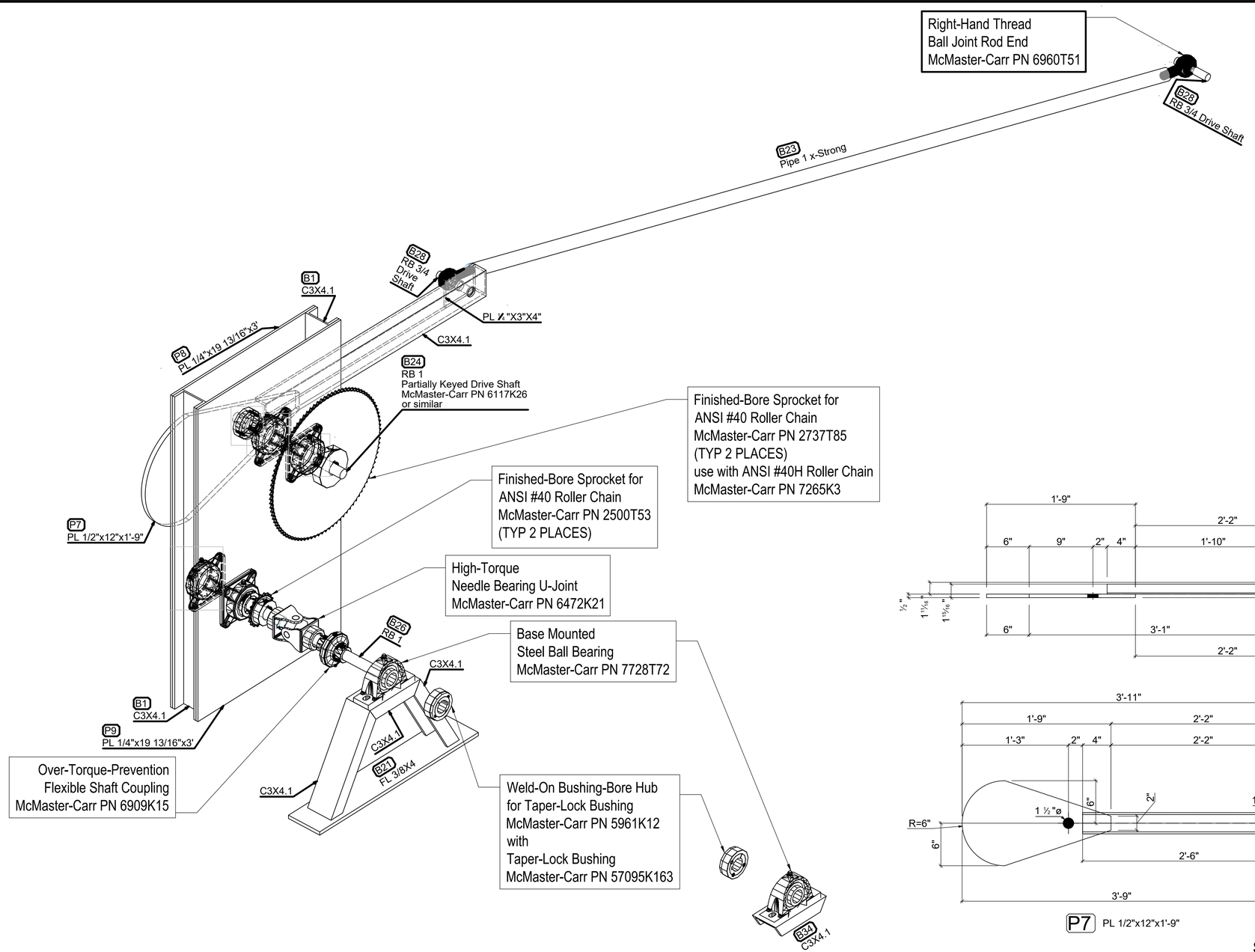

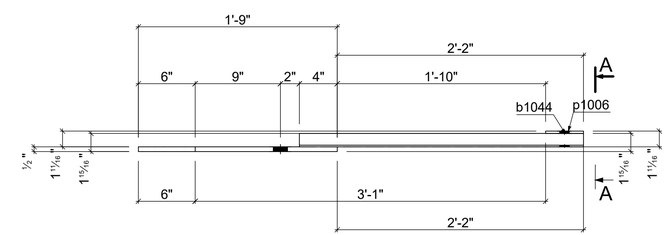

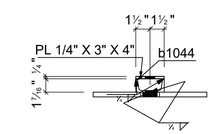

Section A - A

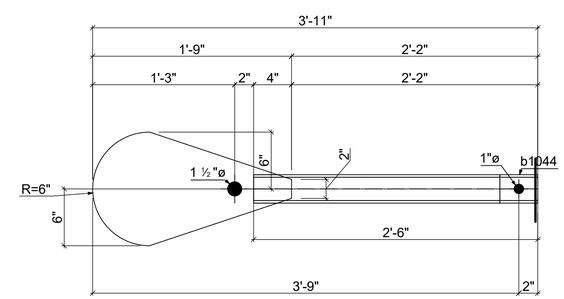

P7 PL 1/2"x12"x1'-9"

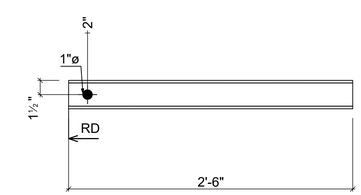

1 - b1044 C3X4.1 - A36

SWING ARM DETAIL

U.S. Fish & Wildlife Service
Red Bluff Fish & Wildlife Service
10950 Tyler Road
Red Bluff, California 96080
www.fws.gov/redbluff

nhc
northwest hydraulic consultants
2600 capitol avenue, suite 140
sacramento, california 95816–5928
phone: (916) 371–7400
fax: (916) 371–7475
www.nhcweb.com

REGISTERED PROFESSIONAL ENGINEER
BRIAN G. WARDMAN
No. 74371
Exp: 06/30/19
CIVIL
STATE OF CALIFORNIA

Revisions		
No.	Date	Description

Drawing Information	
Date	27 September 2017 08:34
Status	100% Submittal
Designer	
Drafter	
Checked	
File Name	DCID M2
Plotted Scale	0 1/2 1 (SCM.01)

P:\500100 Deer Creek DCID Fish Passage\500100.dwg

Deer Creek DCID Dam
Fish Passage Project

Brush Drive Assembly

Job Number
500100

Sheet Number
M2

Sheet 18 of 25

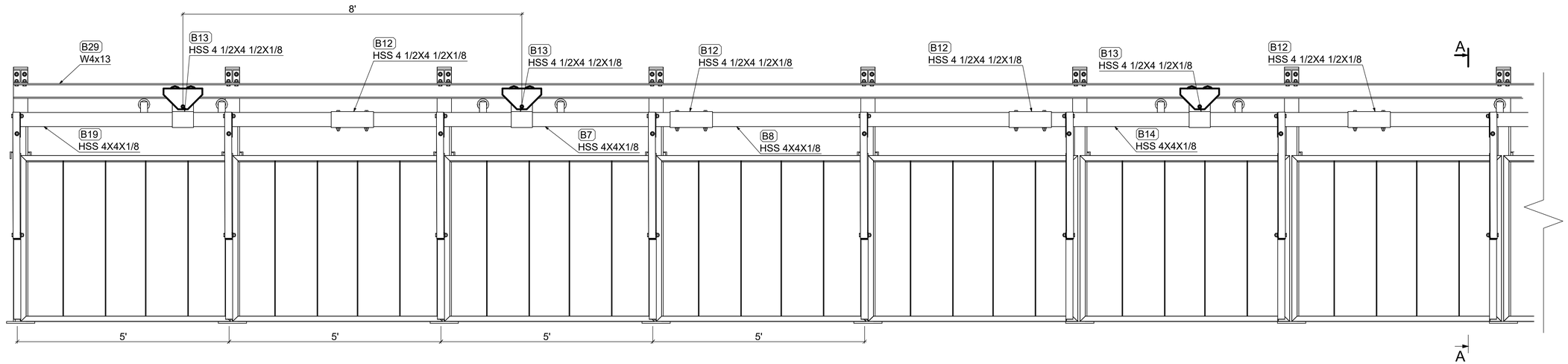

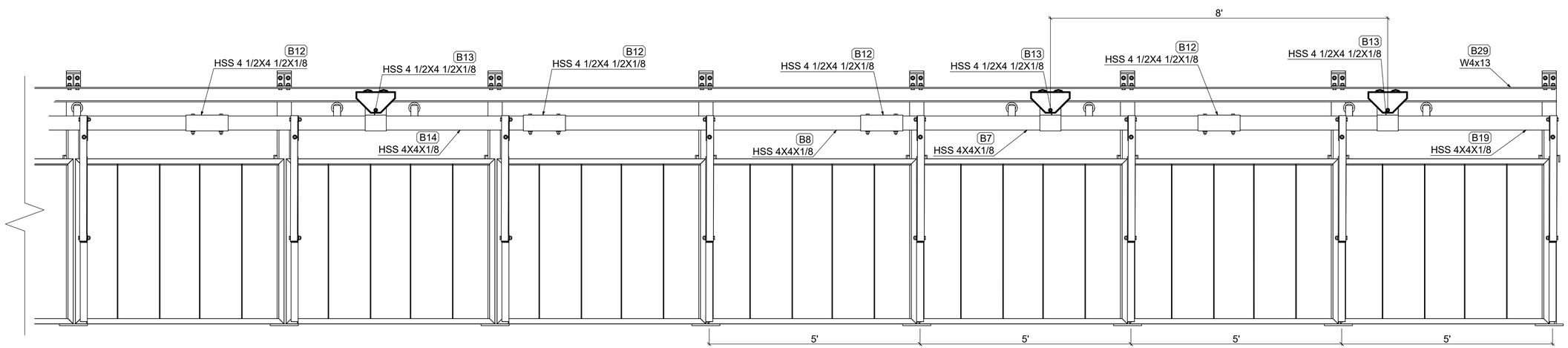

U.S. Fish & Wildlife Service
Red Bluff Fish & Wildlife Service
10950 Tyler Road
Red Bluff, California 96080
www.fws.gov/redbluff

nhc
northwest hydraulic consultants
2600 capitol avenue, suite 140
sacramento, california 95816–5928
phone: (916) 371–7400
fax: (916) 371–7475
www.nhcweb.com

REGISTERED PROFESSIONAL ENGINEER
BRIAN G. WARDMAN
No. 74371
Exp: 06/30/19
CIVIL
STATE OF CALIFORNIA

Revisions		
No.	Date	Description

Drawing Information	
Date	27 September 2017 08:33
Status	100% Submittal
Designer	
Drafter	
Checked	
File Name	DCID MECHANICAL
Plotted Scale	0 1/2 1 (08:33:07) P:\500100_Deer Creek_DCID_Rehabilitation\Drawings\DCID.dwg

Deer Creek DCID Dam
Fish Passage Project

Fish Screen

Job Number
500100

Sheet Number
M3

Sheet 19 of 25

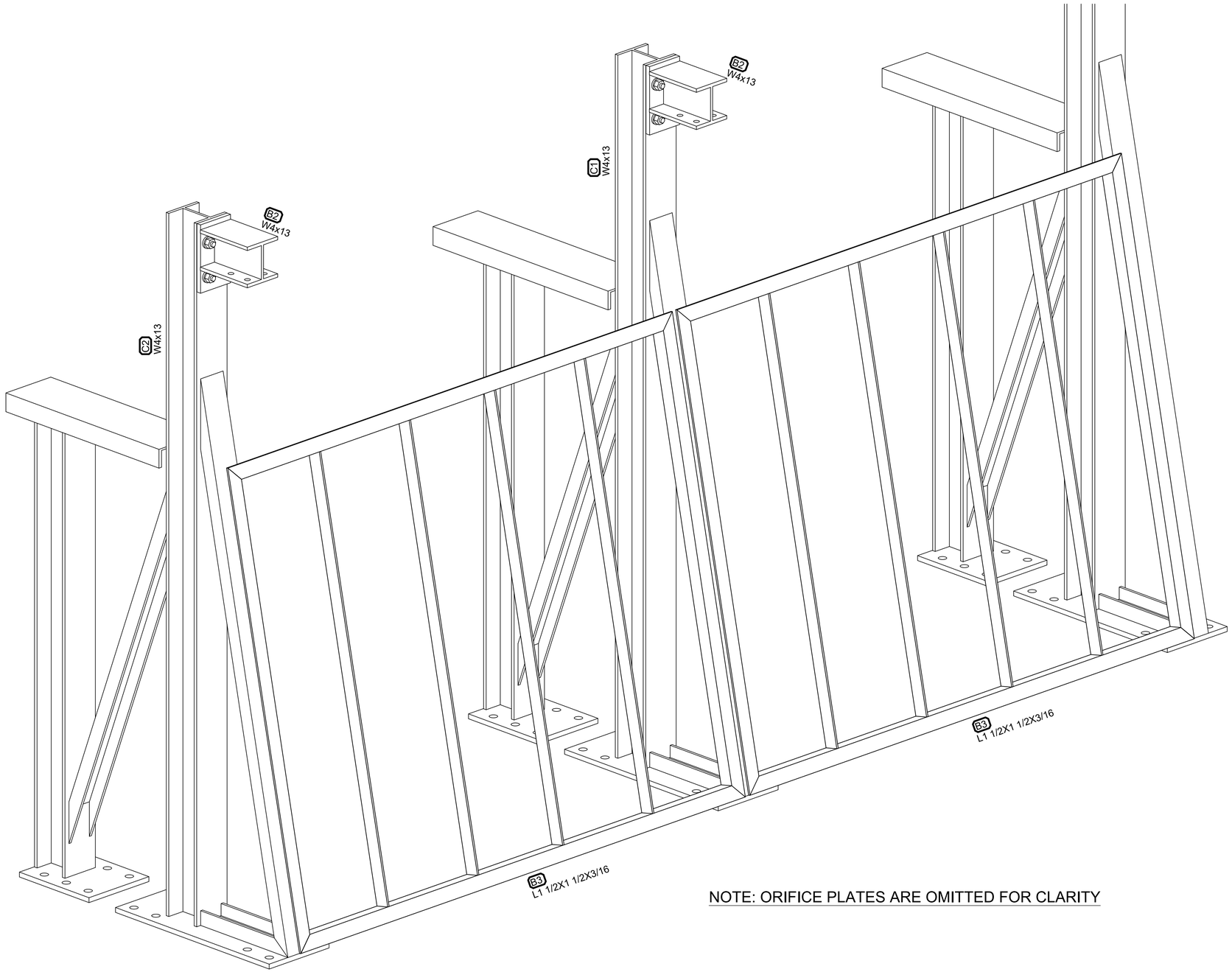

NOTE: ORIFICE PLATES ARE OMITTED FOR CLARITY

U.S. Fish & Wildlife Service
Red Bluff Fish & Wildlife Service
10950 Tyler Road
Red Bluff, California 96080
www.fws.gov/redbluff

nhc
northwest hydraulic consultants
2600 capitol avenue, suite 140
sacramento, california 95816–5928
phone: (916) 371–7400
fax: (916) 371–7475
www.nhcweb.com

REGISTERED PROFESSIONAL ENGINEER
BRIAN G. WARDMAN
No. 74371
Exp: 06/30/19
CIVIL
STATE OF CALIFORNIA

Revisions		
No.	Date	Description

Drawing Information	
Date	27 September 2017 08:33
Status	100% Submittal
Designer	
Drafter	
Checked	
File Name	DCID MECHANICAL
Plotted Scale	0 1/2 1

Deer Creek DCID Dam
Fish Passage Project

Fish Screen Panels

Job Number
500100

Sheet Number
M4

Sheet 20 of 25

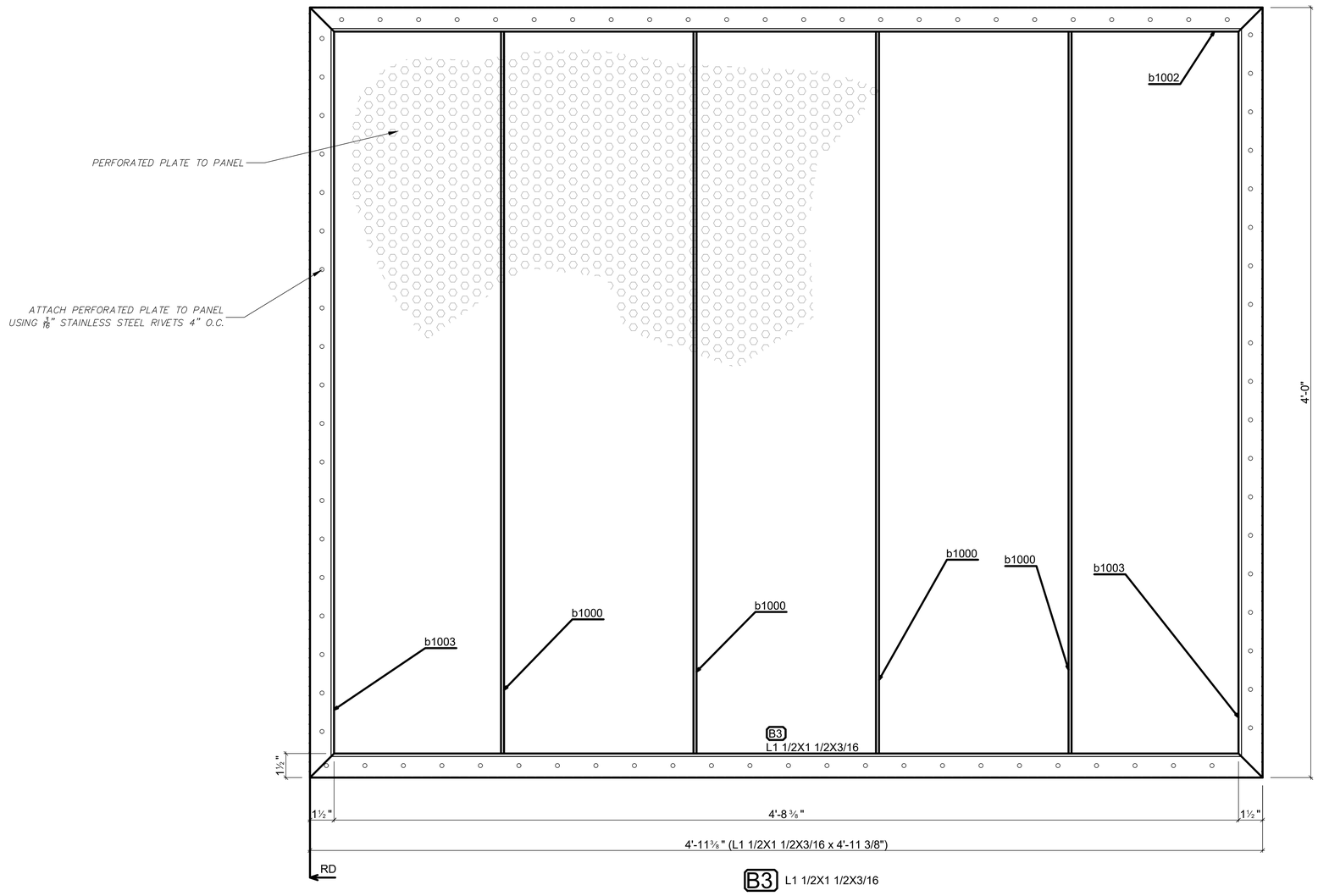

Mark	Description	Length	Grade
B3	Angle		Galvanized
B3	L1 1/2X1 1/2X3/16	4'-11 3/8"	A36
b1003	L1 1/2X1 1/2X3/16	4'	A36
b1000	FL 3/16X1 1/2	3'-9"	A36

U.S. Fish & Wildlife Service
Red Bluff Fish & Wildlife Service
10950 Tyler Road
Red Bluff, California 96080
www.fws.gov/redbluff

nhc
northwest hydraulic consultants
2600 capitol avenue, suite 140
sacramento, california 95816–5928
phone: (916) 371–7400
fax: (916) 371–7475
www.nhcweb.com

REGISTERED PROFESSIONAL ENGINEER
BRIAN G. WARDMAN
No. 74371
Exp: 06/30/19
CIVIL
STATE OF CALIFORNIA

Revisions		
No.	Date	Description

Drawing Information	
Date	27 September 2017 08:33
Status	100% Submittal
Designer	
Drafter	
Checked	
File Name	DCID MECHANICAL
Plotted Scale	0 1/2 1 (08:33 0)

Deer Creek DCID Dam
Fish Passage Project

Screen Panel Detail

Job Number
500100

Sheet Number
M5

Sheet 21 of 25

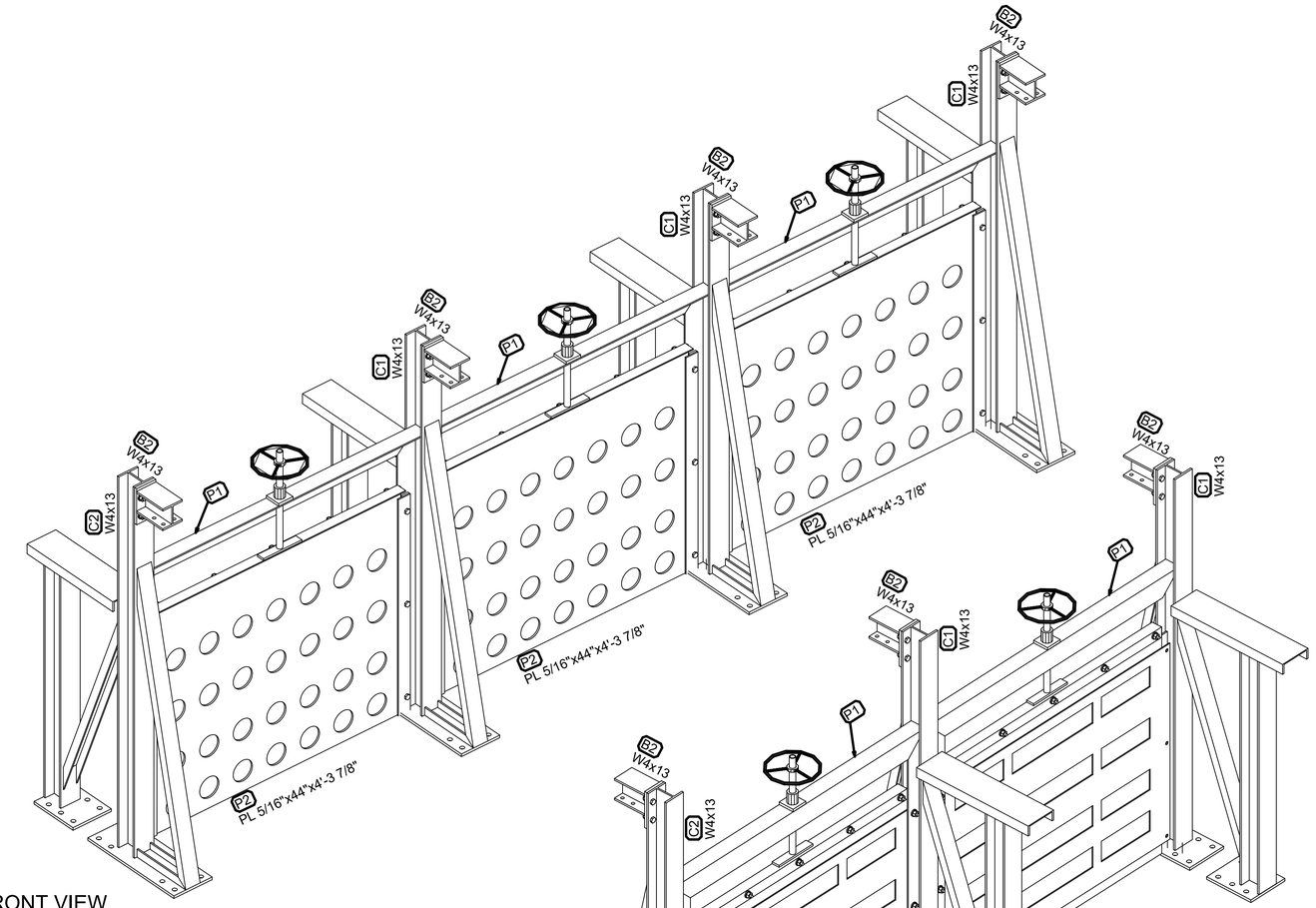

FRONT VIEW

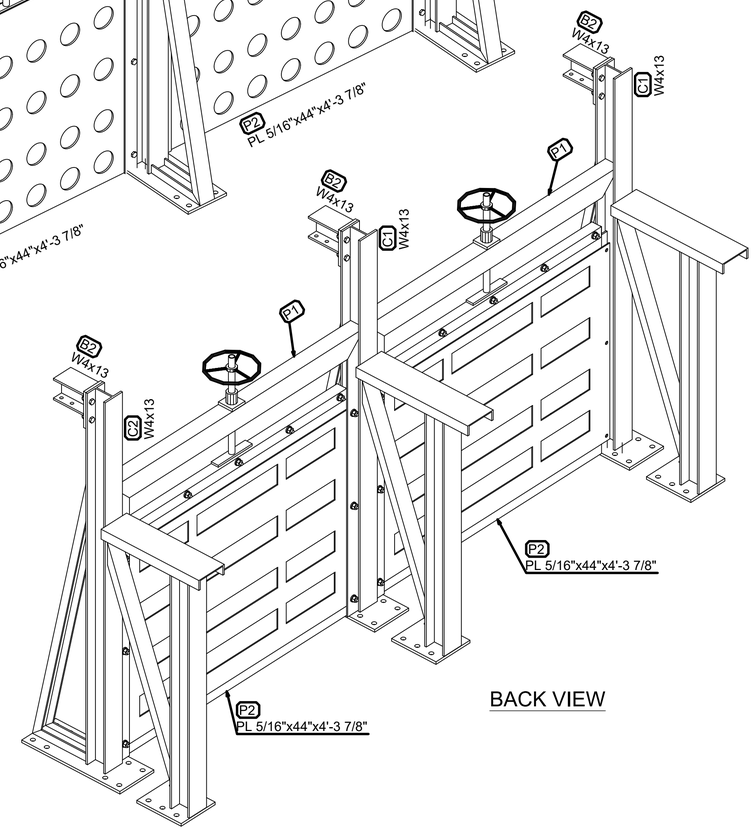

BACK VIEW

U.S. Fish & Wildlife Service
Red Bluff Fish & Wildlife Service
10950 Tyler Road
Red Bluff, California 96080
www.fws.gov/redbluff

nhc
northwest hydraulic consultants
2600 capitol avenue, suite 140
sacramento, california 95816–5928
phone: (916) 371–7400
fax: (916) 371–7475
www.nhcweb.com

REGISTERED PROFESSIONAL ENGINEER
BRIAN G. WARDMAN
No. 74371
Exp: 06/30/19
CIVIL
STATE OF CALIFORNIA

Revisions		
No.	Date	Description

Drawing Information	
Date	27 September 2017 08:33
Status	100% Submittal
Designer	
Drafter	
Checked	
File Name	DCID MECHANICAL
Plotted Scale	0 1/2 1 (08:33:01)

P:\500100 Deer Creek DCID Fish Passage\DCID\Dwg

Deer Creek DCID Dam
Fish Passage Project

Adjustable Orifice

Job Number
500100

Sheet Number
M6

Sheet 22 of 25

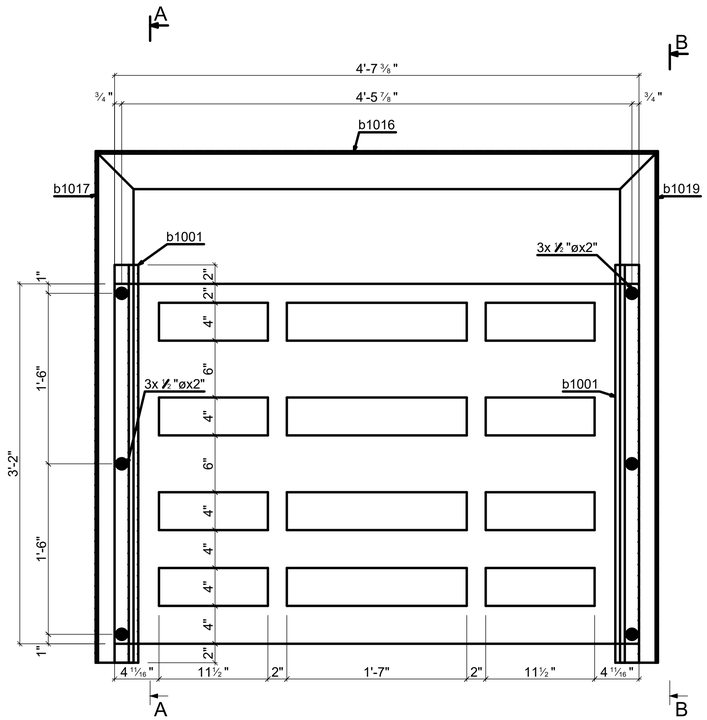

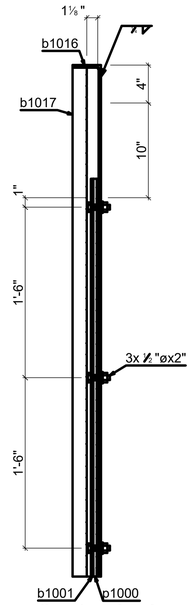

Section A - A

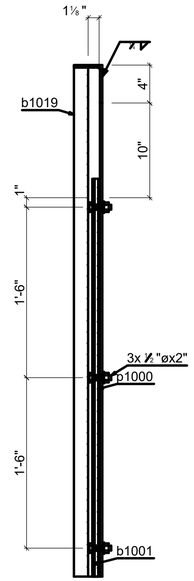

Section B - B

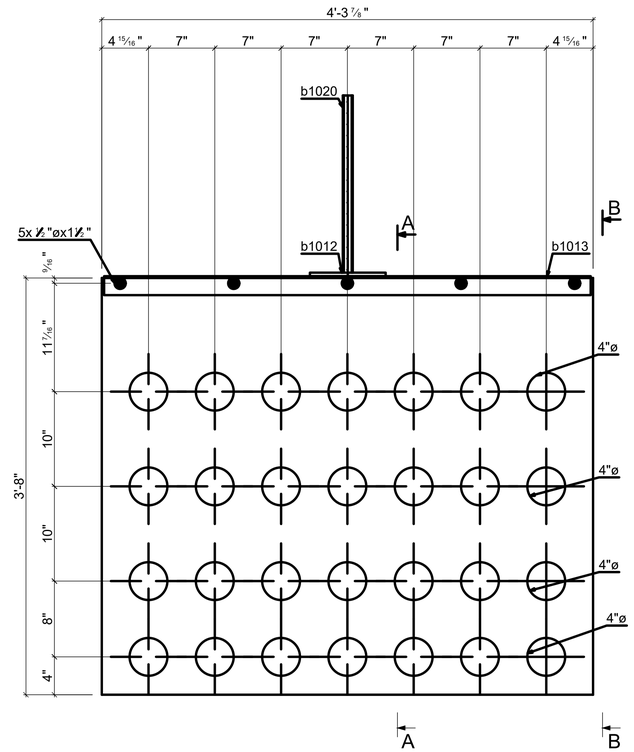

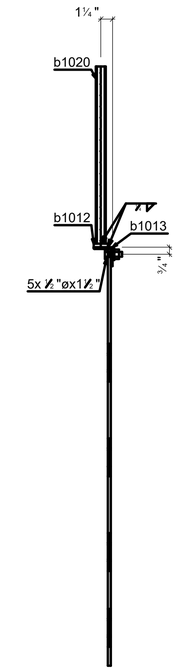

Section A - A

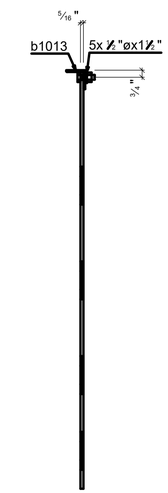

Section B - B

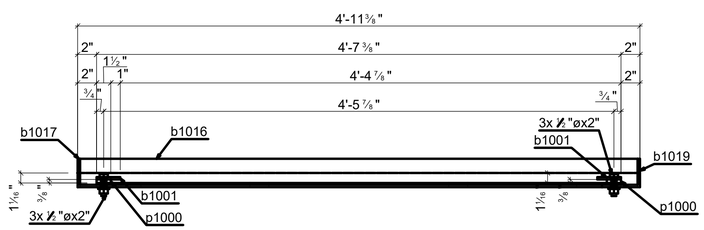

P1 PL 3/16"x38"x4'-7 3/8"

FIXED PLATE

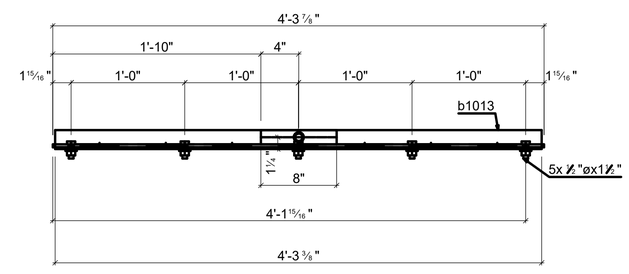

P2 PL 5/16"x44"x4'-3 7/8"

SLIDE PLATE

Mark	Description	Length	Grade
P1	Plate		Galvanized
P1	PL 3/16"x38"x4'-7 3/8"	4'-7 3/8"	A36
b1016	L4X3X1/4	4'-11 3/8"	A36
b1017	L4X3X1/4	4'-6"	A36
b1019	L4X3X1/4	4'-6"	A36
b1001	FL 1/4X2 1/2	3'-6"	A36
p1000	FL 3/8X1 1/2	3'-6"	A36
1004	1/2"ø A307	2"	10.9
P2	Plate		
P2	PL 5/16"x44"x4'-3 7/8"	4'-3 7/8"	A36
b1013	L2X2X3/16	4'-3 3/8"	A36
b1020	Pipe 3/4 Std	1'-6 11/16"	A53
b1012	FL 3/8X1 1/2	8"	A36
1009	1/2"ø A307	1 1/2"	10.9

U.S. Fish & Wildlife Service
Red Bluff Fish & Wildlife Service
10950 Tyler Road
Red Bluff, California 96080
www.fws.gov/redbluff

nhc
northwest hydraulic consultants
2600 capitol avenue, suite 140
sacramento, california 95816–5928
phone: (916) 371–7400
fax: (916) 371–7475
www.nhcweb.com

REGISTERED PROFESSIONAL ENGINEER BRIAN G. WARDMAN No. 74371 Exp: 06/30/19 CIVIL STATE OF CALIFORNIA

Revisions		
No.	Date	Description

Drawing Information	
Date	27 September 2017 08:33
Status	100% Submittal
Designer	
Drafter	
Checked	
File Name	DCID MECHANICAL
Plotted Scale	0 1/2 1

Deer Creek DCID Dam
Fish Passage Project

Adjustable Orifice Components

Job Number
500100

Sheet Number
M7

Sheet 23 of 25

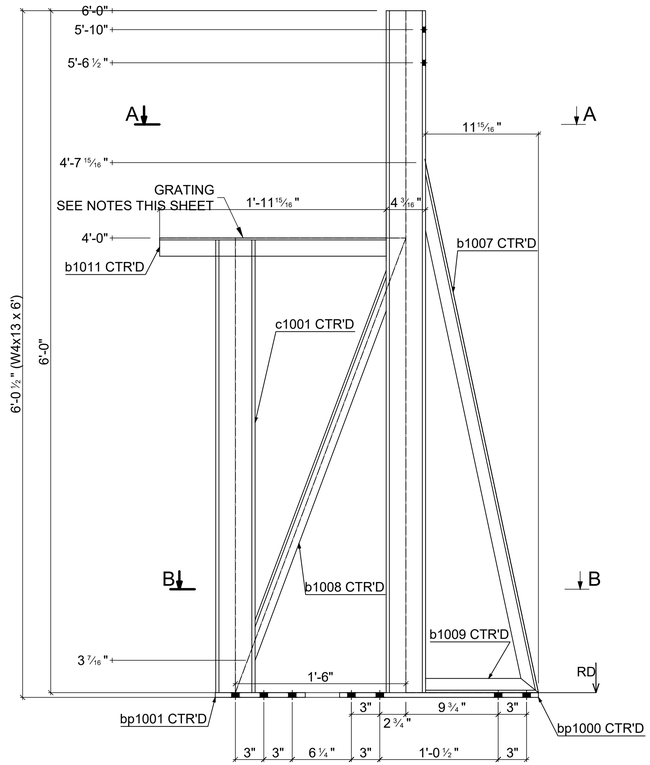

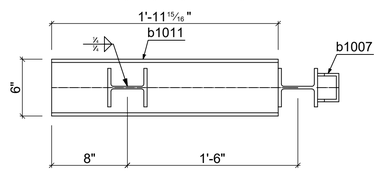

Section A - A

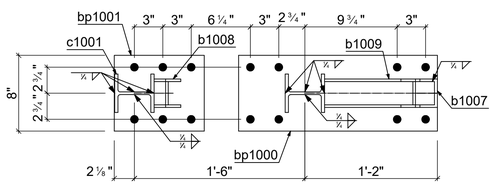

Section B - B

C1 W4x13

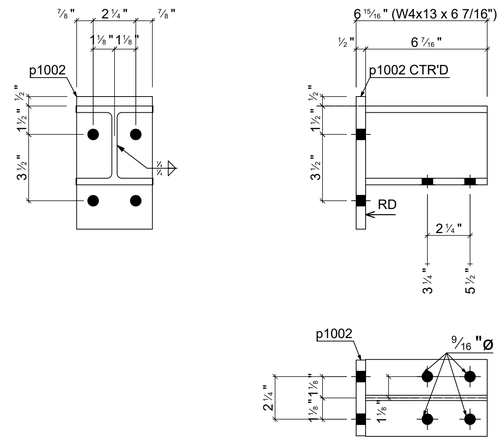

B2 W4x13

SUPPORT TROLLEY BEAM

Mark	Description	Length	Grade
C1	Column		Galvanized
C1	W4x13	6'	A992
c1001	W4x13	3'-11 13/16"	A992
b1007	C3X5	4'-9 3/16"	A36
bp1000	PL 1/2"x8"x1'-9"	1'-9"	A36
b1008	C3X5	3'-7 7/16"	A36
b1011	C6X8.2	1'-11 15/16"	A36
bp1001	PL 1/2"x8"x9 1/2"	9 1/2"	A36
b1009	C3X5	11 15/16"	A36
B2	Beam		Galvanized
B2	W4x13	6 7/16"	A992
p1002	PL 1/2"x4"x7"	7"	A36

GRATING NOTES

1. All panels are to be welded bar grating with the following characteristics:
   a. Type: 19-W-4 (1 1/4" x 3/16") bar grating, with bearing bars on 1 3/16" centers, and cross bars on 4" centers
   b. Material: Carbon Steel
   c. Finish: Galvanized
   d. Surface: Smooth

2. All cut sides shall be banded with Galvanized Flat Bar 3/16" thick x 1 1/4" wide.

3. All panels shall be attached to supporting structure using at a minimum four (4) Saddle Clips, Galvanized, with 1-3/4" self-tapping screws.

U.S. Fish & Wildlife Service
Red Bluff Fish & Wildlife Service
10950 Tyler Road
Red Bluff, California 96080
www.fws.gov/redbluff

nhc northwest hydraulic consultants
2600 capitol avenue, suite 140
sacramento, california 95816–5928
phone: (916) 371–7400
fax: (916) 371–7475
www.nhcweb.com

REGISTERED PROFESSIONAL ENGINEER BRIAN G. WARDMAN No. 74371 CIVIL STATE OF CALIFORNIA Exp: 06/30/19

Revisions		
No.	Date	Description

Drawing Information	
Date	27 September 2017 08:33
Status	100% Submittal
Designer	
Drafter	
Checked	
File Name	DCID MECHANICAL
Plotted Scale	0 1/2 1

Deer Creek DCID Dam
Fish Passage Project

Screen Structure

Job Number 500100

Sheet Number

M8

Sheet 24 of 25

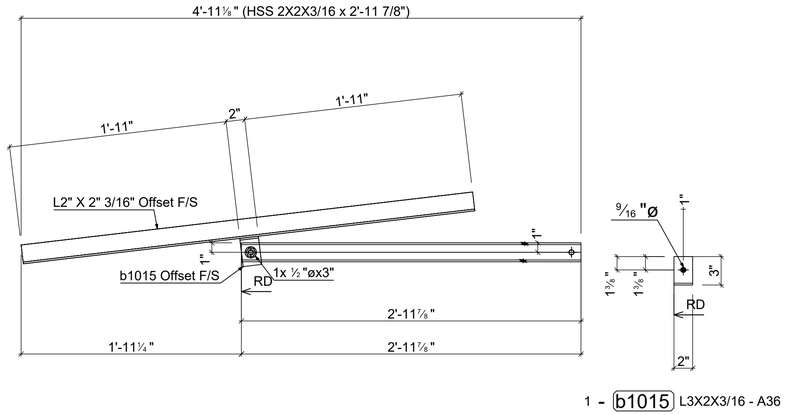

1 - b1015 L3X2X3/16 - A36

B15 HSS 2X2X3/16

WIPER DETAIL

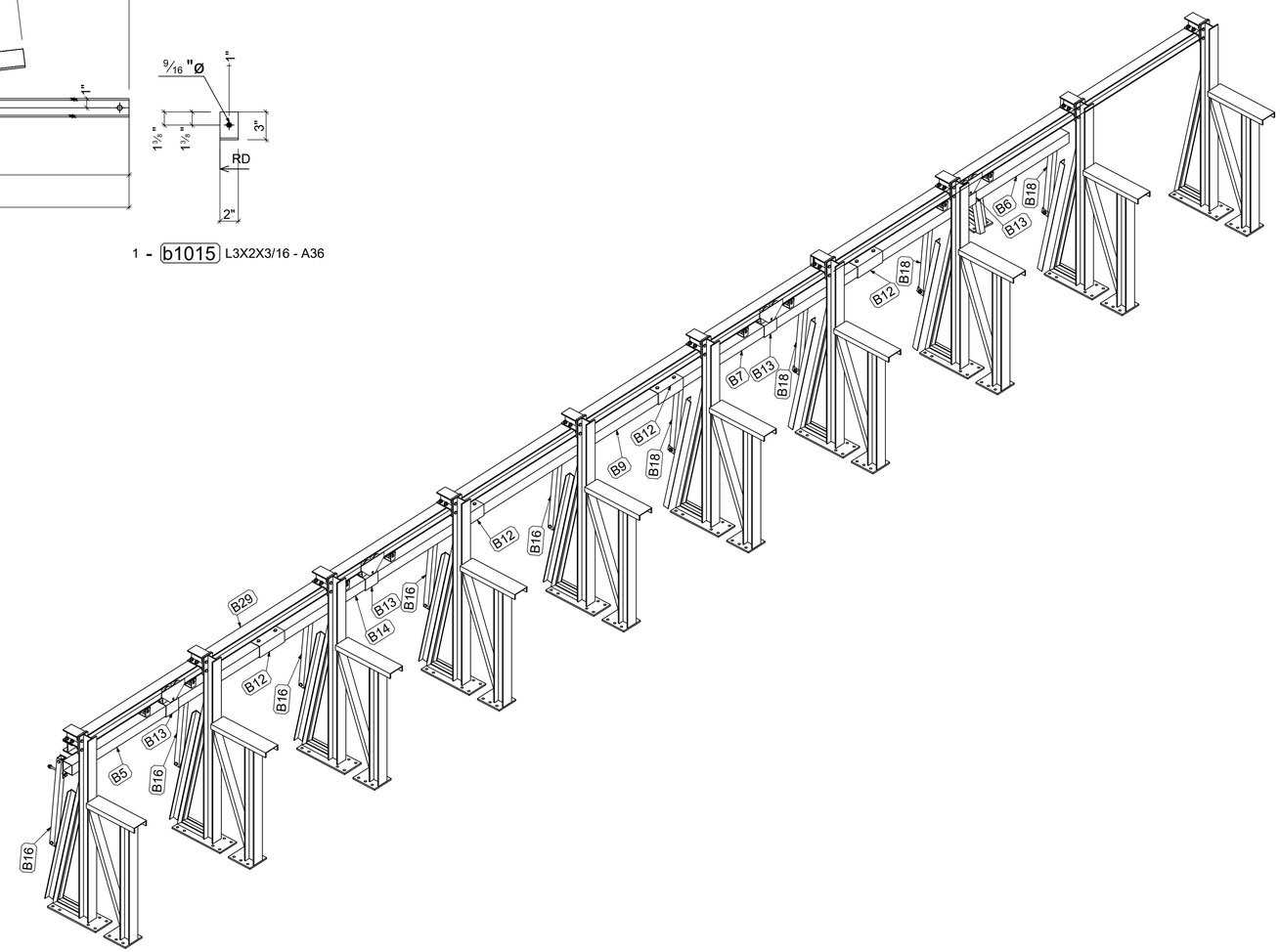

U.S. Fish & Wildlife Service
Red Bluff Fish & Wildlife Service
10950 Tyler Road
Red Bluff, California 96080
www.fws.gov/redbluff

nhc
northwest hydraulic consultants
2600 capitol avenue, suite 140
sacramento, california 95816–5928
phone: (916) 371–7400
fax: (916) 371–7475
www.nhcweb.com

REGISTERED PROFESSIONAL ENGINEER
BRIAN G. WARDMAN
No. 74371
Exp: 06/30/19
CIVIL
STATE OF CALIFORNIA

Revisions		
No.	Date	Description

Drawing Information	
Date	27 September 2017 08:33
Status	100% Submittal
Designer	
Drafter	
Checked	
File Name	DCID MECHANICAL
Plotted Scale	0 1/2 1 (08:33:07)

P:\500100_Deer Creek_DCID_Rehabilitation\DCID MECH.dwg

Deer Creek DCID Dam
Fish Passage Project

Brush System

Job Number
500100

Sheet Number
M9

Sheet 25 of 25

Appendix B

Potentially-occurring Special-status Vascular Plant Species

Appendix B. Table 1: Special-status Plant Species with Potential to Occur at the Deer Creek DCID Dam Fish Passage Project, Tehama County, California

Scientific Name **Common Name**	**CNPS Rank**	**Geographic Range**	**Elevation (meters)**	**Habitat/Plant Community Associations**	**Flowering Period**
Allium sanbornii var. sanbornii **Sanborn's Onion**	4.2 S3S4 G4T3T4	Butte, Calaveras, Eldorado, Nevada, Placer, Shasta, Tehama, Tuolumne, and Yuba counties; Oregon	260 to 1,510	Usually serpentinite, gravelly; Chaparral, Cismontane Woodland and Lower Montane Coniferous Forest	May - September
Astragulus pauperculus **Depauperate Milk-vetch**	4.3 S4 G4	Butte, Placer, Shasta, Tehama, and Yuba counties	60 to 1,215	Vernally mesic, volcanic; Chaparral, Cismontane Woodland and Valley and Foothill Grasslands	March - June
Astragalus tener var. *ferrisiae* **Ferris' Milk-vetch**	1B.1 S1 G2T1	Butte, Contra Costa, Colusa, Glenn, Solano*, Sutter, and Yolo counties	2 to 75	Meadows and Seeps (vernally mesic), Valley and Foothill Grasslands, Sub-alkaline Flats	April - May
Calochortus syntrophus **Callahan's Mariposa Lily**	1B.1 S1 G1	Shasta and Tehama counties	525 to 1,145	Cismontane Woodland and Valley and Foothill Grasslands	May - June
Calycadeia oppositifolia **Butte County Calycadenia**	4.2 S3 G3	Butte County	90 to 945	Openings, volcanic, serpentinite, granitic; Chaparral, Cismontane Woodland, Meadows and Seeps, and Valley and Foothill Grasslands	April - July
Calystegia atriplicifolia ssp. *buttensis* **Butte County Morning-glory**	4.2 S3 G5T3	Butte, Del Norte, Mendocino (?), Shasta, and Tehama counties	565 to 1,524	Rocky, sometimes roadside; Chaparral and Lower Montane Coniferous Forest	May - July
Campylopodiella stenocarpa **Flagella-like Atractylocarpus**	2B.2 S1? G5	Butte and Trinity counties; Elsewhere in U.S.	100 to 500	Cismontane Woodland	n/a
Castilleja rubicundula var. *rubicundula* **Pink Creamsacs**	1B.2 S2 G5T2	Butte, Contra Costa, Colusa, Glenn, Lake, Napa, Santa Clara, and Shasta counties	90 - 910	Serpentinite	April - June
Clarkia gracilis ssp. *albicaulis*	1B.2 S2S3	California endemic: Butte, Lake, and Tehama counties	245-1,085	Sometimes serpentinite	May - July

Scientific Name **Common Name**	**CNPS Rank**	**Geographic Range**	**Elevation (meters)**	**Habitat/Plant Community Associations**	**Flowering Period**
White-stemmed Clarkia	G5T2T3			Chaparral and Cismontane Woodland	
Crypthantha crinata **Silky Cryptantha**	1B.2 S2 G2	Shasta and Tehama counties	61 to 1,215	Gravelly streambeds; Cismontane Woodland, Lower Montane Coniferous Forest, Riparian Forest, Riparian Woodland, and Valley and Foothill Grasslands	April - May
Downingia pusilla **Dwarf Downingia**	2B.2 S2 GU	Amador, Fresno, Merced, Napa, Placer, Sacramento, San Joaquin, Solano, Sonoma, Stanislaus, Tehama, and Yuba counties; South America	1 to 445	Valley and Foothill Grasslands (mesic) and Vernal Pools	March - May
Erythranthe glaucescens **Shield-bracted Monkeyflower**	4.3 S3S4 G3G4	Butte, Colusa, Lake, Nevada, Shasta, and Tehama counties	60 to 1,240	Serpentinite seeps, sometimes streambanks; Chaparral, Cismontane Woodland, Lower Montane Coniferous Forest and Valley and Foothill Grasslands	February - September
Euphorbia hooveri **Hoover's Spurge**	FT NL 1B.2 S1 G1	Butte, Colusa, Glenn, Merced, Stanislaus, Tehama, and Tulare counties	20 to 250	Vernal Pools	July - October
Fritillaria eastwoodiae **Butte County Fritillary**	3.2 S3 G3Q	Butte, Eldorado, Nevada, Placer, Shasta, Tehama, and Yuba counties; Oregon	50 to 1,500	Sometimes serpentinite; Chaparral, Cismontane Woodland and Lower Montane Coniferous Forest (openings)	March - June
Fritillaria pluriflora **Adobe Lily**	1B.2 S2S3 G2G3	Butte, Colusa, Glenn, Lake, Napa, Solano, Tehama, and Yolo counties	60 to 705	Often adobe; Chaparral, Cismontane Woodland and Valley and Foothill Grasslands	February - April
Gratiola heterosepala **Boggs Lake Hedge Hyssop**	NL CE 1B.2 S2 G2	Fresno, Lake, Lassen, Madera, Merced, Modoc, Placer, Sacramento, Shasta, Siskiyou, San Joaquin, Solano, and Tehama counties	10 to 2,375	Clay; Marshes and Swamps (lake margin) and Vernal Pools	April - August
Hesperevax caulescens ***Hogwallow Starfish***	4.2 S3 G3	Alameda, Amador, Butte, Colusa, Contra Costa, Fresno, Glenn, Kern, Merced, Monterey, Napa*, Sacramento, San Diego*,	0 to 505	Valley and Foothill Grasslands (mesic, clay) and Vernal Pools (shallow)	March - June

Scientific Name **Common Name**	**CNPS Rank**	**Geographic Range**	**Elevation (meters)**	**Habitat/Plant Community Associations**	**Flowering Period**
		San Joaquin, San Luis Obispo, Stanislaus, Sutter, Tehama and Yolo counties			
Hibiscus lasiocarpos var. *occidentalis* **Woolly Rose-mallow**	1B.2 S3 G5T3	Butte, Contra Costa, Colusa, Glenn, Sacramento, San Joaquin, Solana, Sutter and Yolo counties	0 to 120	Often on Rip-rap on sides of levees; Marshes and Swamps (freshwater)	June - September
Imperata brevifolia **California Satintail**	2B.1 S3 G4	Butte, Fresno, and Imperial counties; and elsewhere	0 to 1,215	Mesic; Chaparral, Coastal Scrub and Mojave Desert	May - September
Juncus leiospermus var. *leiospermus* **Red Bluff Dwarf Rush**	1B.1 S2 G2T2	Butte, Placer, Shasta and Tehama counties	35 to 1,250	Valley and Foothill Grasslands (mesic)	March - June
Lasthenia glabrata ssp. coulteri **Coulter's Goldfields**	1B.1 S2 G4T2	Colusa, Kern (*), Los Angeles (*), Merced, Orange, Riverside, Santa Barbara, San Bernardino (*), San Diego, San Luis Obispo, Tehama, Tulare (?), Ventura, and Yolo counties; Santa Rosa Island	1 to 1,220	Marshes and Swamps, Coastal Salt Playas and Vernal pools	February - June
Limnanthes floccosa ssp. *californica* **Butte County Meadowfoam**	FE CE 1B.1 S1 G4T1	Butte	46 to 930	Valley and Foothill Grasslands (mesic) and vernal pools	March - May
Limnanthes floccosa ssp. *floccosa* **Wooly Meadowfoam**	4.2 S3 G4T4	Butte, Lake, Lassen, Napa, Shasta, Siskiyou, Tehama, and Trinity counties; Oregon	60 to 1,335	Vernally mesic; Chaparral, Cismontane Woodland, Valley and Foothill Grasslands and Vernal Pools	March - June
Monardella venosa **Veiny monardella**	1B.1 S1 G1	Butte, Sutter (*), Tuolumne, and Yuba counties	60 to 410	Heavy clay; Cismontane Woodland and Valley and Foothill Grasslands	May - July
Navarretia heterandra **Tehama Navarretia**	4.3 S4 G4	Butte, Colusa, Lake, Napa, Shasta, Tehama, Trinity, and Yuba counties; Oregon	30 to 1,010	Valley and Foothill Grasslands (mesic), Vernal Pools	April - June
Navarretia nigelliformis ssp. nigelliformis **Adobe Navarretia**	4.2 S3 G4T3	Alameda, Butte, Contra Costa, Colusa, Fresno, Kern, Merced, Monterey, Placer, Sutter, and Tulare counties	100 to 1,000	Clay, sometimes serpentinite; Valley and Foothill Grasslands, vernal pools sometimes	April - June

Scientific Name **Common Name**	**CNPS Rank**	**Geographic Range**	**Elevation (meters)**	**Habitat/Plant Community Associations**	**Flowering Period**
Navarretia subuligera **Awl-leaved Navarretia**	4.3 S4 G4	Amador, Butte, Del Norte, Lake, Mendocino, Modoc, Napa, Shasta and Tehama counties: Oregon	150 to 1,100	Rocky, mesic; Chaparral, Cismontane Woodland, Lower Montane Coniferous Forest	April - August
Orcuttia pilosa **Hairy Orcutt Grass**	FE CE 1B.1 S1 G1	Butte, Glenn, Madera, Merced, Stanislaus, and Tehama	46 to 200	Vernal pools	May-Sept
Orcuttia tenuis **Slender Orcutt Grass**	FT CE 1B.1 S2 G2	Butte, Lake, Lassen, Modoc, Plumas, Sacramento, Shasta, Siskiyou, and Tehama	35 to 1,760	Vernal Pools (often gravelly)	May-October
Paronychia ahartii **Ahart's Paronychia**	1B.1 S3 G3	Butte, Shasta and Tehama counties	30 to 510	Cismontane Woodland, Valley and Foothill Grasslands and Vernal Pools	February - June
Polygonum bidwelliae **Bidwell's Knotweed**	4.3 S4 G4	Butte, Shasta, and Tehama counties	60 to 1,200	Chaparral, Cismontane Woodland and Valley and Foothill Grasslands	April - July
Rhynchospora californica **California Beaked-rush**	1B.1 S1 G1	Butte, Marin, Napa, and Sonoma counties	45 to 1,010	Bogs and Fens, Lower Montane Coniferous Forest, Meadows and Seeps, and Marshes and Swamps (freshwater)	May - July
Sagittaria sanfordii **Sanfords Arrowhead**	1B.2 S3 G3	Butte, Del Norte, Eldorado, Fresno, Mariposa, Merced, Orange*, Placer, Sacramento, San Bernardino, San Joaquin, Shasta, Solano, Tehama, Ventura*, and Yuba counties	0 to 650	Marshes and Swamps (assorted shallow freshwater)	May - November
Sidalcea robusta **Butte County Checkerbloom**	1B.2 S2 G2	Butte County	90 to 1,600	Chaparral and Cismontane Woodlands	April - June
Tuctoria greenei **Greene's Tuctoria**	FE CR 1B.1 S1 G1	Butte, Colusa, Fresno*, Glenn, Madera*, Merced, Modoc, Shasta, San Joaquin*, Stanislaus*, Tehama, and Tulare*	30 to 1,070	Vernal pools	May-Sept

*** Status Codes:** **California Rare Plant Rank:**

1B: Plants Rare, Threatened, or Endangered in CA and elsewhere
2B: Plants Rare, Threatened or Endangered in CA but more common elsewhere
3: More Information Needed
4: Plants of Limited Distribution-A watch list
0.1: Seriously Threatened in California (over 80% of occurrences / high degree and immediacy of threat
0.2: Moderately Threatened in California (20-80% / Moderate degree and immediacy of threat
0.3 Not very threatened in California (less than 20% of occurrences) / Low degree or no current threats known
***** = May be extirpated from County; **(?)** = Uncertain about distribution or identity

Global Ranking

G1 = Critically Imperiled- At a very high risk of extinction due to extreme rarity (often 5 or fewer populations), very steep declines, or other factors.
G2 = Imperiled- At high risk of extinction due to very restricted range, very few population (often 20 or fewer), steep declines, or other factors.
G3 = Vulnerable – At moderate risk of extinction due to a restricted range, relatively few population (often 80 or fewer), recent and widespread declines, or other factors.
G4 = Apparently Secure – Uncommon but not rare; some cause for long term concern due to declines or other factors
G5 = Secure – Common; widespread and abundant.

Other Global Symbols

Q = The element is very rare, but there are taxonomic questions associated with it.
T = T- Rank reflects the global situation of just the subspecies or variety.

State Ranking

S1 = State Ranking – Critically Imperiled- Critically imperiled in the state because of extreme rarity (often 5 or fewer populations) or because of factor(s) such as steep declines making it especially vulnerable to extirpation from the state.
S2 = State Ranking – Imperiled- Imperiled in the state because of rarity due to a very restricted range, very few population (often 20 or fewer), steep declines, or other factors making it very vulnerable to extirpation from the state.
S3 = State Ranking – Vulnerable – Vulnerable in the state due to a restricted range, relatively few populations (often 80 or fewer), recent and widespread declines or other factors making it vulnerable to extirpation from the state.
S4 = Apparently Secure – Uncommon but not rare in the state; some cause for long-term concern due to declines or other factors.
S5 = Secure – Common, widespread, and abundant in the state.

Appendix C

Vascular Plant Species Observed Within or Near the Project Site

Appendix C-Table 2. Vascular Plant Species Identified During 2018 Field Survey; Deer Creek DCID Dam Fish Passage Project; Tehama County, CA; Surveys and Species ID by John Dittes

SCIENTIFIC NAME				Native / Introduced	COMMON NAME
ADOXACEAE					**MUSKROOT FAMILY**
Sambucus	*nigra*	ssp.	*caerulea*	N	Blue Elderberry
AGAVACEAE					**AGAVE FAMILY**
Chlorogalum	*angustifolium*			N	Narrow-leaved Soap-plant
Chlorogalum	*pomeridianum*	var.	*pomeridianum*	N	Wavy-leaved Soap-plant
ALLIACEAE					**ONION FAMILY**
Allium	*amplectens*			N	Clasping Onion
ANACARDIACEAE					**SUMAC FAMILY**
Rhus	*aromatica*			N	Skunkbrush
Toxicodendron	*diversilobum*			N	Western Poison-oak
APIACEAE					**CARROT FAMILY**
Eryngium	*castrense*			N	Coyote Thistle
Sanicula	*bipinnatifida*			N	Purple Sanicle
Sanicula	*bipinnata*			N	Poison Sanicle
Torilis	*arvensis*			I	Tall Sock-destroyer
APOCYNACEAE					**DOGBANE FAMILY**
Apocynum	*cannabinum*			N	Indian Hemp
Asclepias	*eriocarpa*			N	Indian Milkweed
Asclepias	*fascicularis*			N	Narrow-leaved Milkweed
ARISTOLOCHIACEAE					**GINSENG FAMILY**
Aristolochia	*californica*			N	California Pipevine
ASTERACEAE					**SUNFLOWER FAMILY**
Achyrachaena	*mollis*			N	Blow-wives
Agoseris	*heterophylla*			N	Annual Agoseris
Artemisia	*californica*			N	Mugwort
Baccharis	*glutinosa*			N	Mulefat
Bidens	*frondosa*			N	Sticktight
Brickelia	*californica*			N	California Bricklebush
Calycadenia	prob. *fremontii*			N	Pre-flowering Tarweed (not *C. oppositifolia*)
Calycadenia	*truncata*			N	Rosinweed
Carduus	*pycnocephalus*	var.	*pycnocephalus*	I	Italian Plumeless Thistle
Cirsium	*vulgare*			I	Bull Thistle
Centaurea	*melitensis*			I	Tocalote
Centaurea	*solstitialis*			I	Yellow Starthistle
Centromadia	*fitchii*			N	Fitch's Spikeweed
Cichorium	*intybus*			I	Chicory
Erigeron	*canadensis*			N	Canadian Horseweed
Eriophyllum	*lanatum*	var.	*grandiflorum*	N	Large-flowered Wooly-sunflower
Europappus	*lindleyi*			N	Silverpufffs
Euthamia	*occidentalis*			N	Western Goldenrod
Gnaphalium	*palustre*			N	Western Cudweed
Grindelia	*hirsutala*	var.	*davyi*	N	Foothill Gumweed
Hesperevax	*caulescens*			N	Hogwallow Starfish
Heterotheca	*grandiflora*			N	Telegraph Weed
Heterotheca	*oregona*	var.	*compacta*	N	Oregon Golden-aster
Hypochaeris	*glabra*			I	Smooth Cat's-ear
Lagophylla	*sp.*			N	Hareleaf
Lasthenia	*californica*			N	California Goldfields
Lasthenia	*fremontii*			N	Fremont's Goldfields
Layia	*fremontii*			N	Fremont's Tidytips
Leontodon	*saxatillis*			I	Long-beaked Hawkbit
Lessingia	*nana*			N	Dwarf Lessingia
Logfia	*gallica*			N	Narrow-leaved Filago
Madia	*gracilis*			N	Slender Tarweed
Matricaria	*discoidea*			I	Common Pineapple-weed
Micropus	*californicus*	var.	*californicus*	N	Slender Cottonweed
Microseris	*acuminata*			N	Sierra Foothill Microseris
Microseris	*douglasii*	ssp.	*douglassi*	N	Douglas' Microseris
Pseudognaphalium	*luteoalbum*			I	Weedy Cudweed
Psilocarphus	*brevissimus*	var.	*brevissimus*	N	Dwarf Wooly-marbles
Psilocarphus	*oregonus*			N	Oregon Woolly-marbles
Senecio	*vulgare*			I	Old Man of Spring
Silybum	*marianum*			I	Milk-thistle
Solidago	*velutina*	ssp.	*californica*	N	California Goldenrod
Sonchus	*asper*	ssp.	*asper*	I	Prickly Sow Thistle
Xanthium	*strumarium*			N	Cocklebur
BETULACEAE					**BIRCH FAMILY**
Alnus	*rhombifolia*			N	White Birch
BLECHNACEAE					**CHAIN FERN FAMILY**
Woodwardia	*fimbriata*			N	Giant Chain Fern

Appendix C-Table 2. Vascular Plant Species Identified During 2018 Field Survey; Deer Creek DCID Dam Fish Passage Project; Tehama County, CA; Surveys and Species ID by John Dittes

BORAGINACEAE					**BORAGE FAMILY**
Amsinkia	*menziesii*			N	Menzie's Fiddlneck
Amsinckia	*intermedia*			N	Common Fiddleneck
Cryptantha	*flaccida*			N	Weak-stemmed Cryptantha
Heliotropium	*curassavicum*	var.	*oculatum*	N	California Yerba-santa
Myosotis	sp.				Forget-me-not
Phacelia	*egena*			N	Rock Phacelia
Plagiobothrys	*canescens*			N	Valley Popcorn-flower
Plagiobothrys	*nothofulvus*			N	Common Popcorn-flower
Plagiobothrys	*stipitatus*	var.	*micranthus*	N	Small-flowered Popcorn-flower
BRASSICACEAE					**MUSTARD FAMILY**
Athysanus	*pusillus*			N	Petty Athysanus
Hirschfeldia	*incana*			I	Hoary Mustard
Lepidium	*nitidum*			N	Shiny Pepper-grass
Nasturtium	*officinale*			N	Watercress
Sisymbrium	*officinale*			I	Hedge-mustard
Thysanocarpus	*curvipes*			N	Spokepod
CALYCANTHACEAE					**CALYCANTHUS FAMILY**
Calycanthus	*occidentalis*			N	Western Spicebush
CAPRIFOLIACEAE					**HONESUCKLE FAMILY**
Lonicera	*interrupta*			N	Chaparral Honeysuckle
Symphoricarpos	*albus*	var.	*laevigatus*	N	Common Snowberry
CARYOPHYLLACEAE					
Cerastium	*glomeratum*			I	Sticky Mouse-eared Chickweed
Herniaria	*hirsuta*	var.	*hirsuta*	I	Herniaria
Minuartia	*californica/cismontana*			N	Sandwort (dried)
Petrorhagia	*dubia*			I	Grass Pink
Scleranthus	*annuus*			I	Knawel
Silene	*gallica*			I	Windmill-pink
Spergularia	*rubra*			I	Ruby Sandspurry
Stellaria	*media*			I	Common Chickweed
Stellaria	*pallida*			I	Pallid Starwort
CONVOLVULACEAE					**MORNING-GLORY FAMILY**
Convolvulus	*arvensis*			I	Bindweed
CRASSULACEAE					**STONECROP FAMILY**
Crassula	*connata*			N	Pygmyweed
Dudleya	*cymosa*	ssp.	*cymosa*	N	Canyon Dudleya
Sedella	*pumila*			N	Dwarf Stonecrop
CUPRESSACEAE					**CYPRESS FAMILY**
Juniperus	*californica*			N	California Juniper
CYPERACEAE					**SEDGE FAMILY**
Carex	*nudata*			N	Torrent Sedge
Cyperus	*eragrostis*			N	Tall Cyperus
Eleocharis	*macrostachya*			N	Pale Spike-rush
Eleocharis	sp.			N	Spike-rush
Scirpus	*microcarpus*			N	Small-fruit Bulrush
EQUISETACEAE					**HORSETAIL FAMILY**
Equisetum	*arvensis*			N	Common Horsetail
Equisetum	*hyemale*	ssp.	*affine*	N	Common Scouring-rush
ERICACEAE					**HEATH & WINTERGREEN FAMILY**
Arctostaphylos	*sp.*				Manzanita
EUPHORBIACEAE					**SPURGE FAMILY**
Chamaesyce	*maculata*			I	Spotted Spurge
Croton	*setigerus*			N	Turkey-mullein
FABACEAE					**PEA FAMILY**
Acmispon	*americanus*	var.	*americanus*	N	Spanish Lotus
Acmispon	*parviflorus*			N	Small-flowered Lotus
Cercis	*occidentalis*			N	Western Redbud
Lotus	*corniculatus*			I	Bird's-foot Trefoil
Lupinus	*albufrons*			N	Silver Bush Lupine
Lupinus	*bicolor*			N	Bicolored Lupine
Medicago	*polymorpha*			I	California or Common Bur-clover
Melilotus	*albus*			I	White Sweet-clover
Trifolium	*depauperatum*		*?*	N	Cowbag Clover
Trifolium	*ciliolatum*			N	Foothill Clover
Trifolium	*dubium*			I	Little Hop Clover
Trifolium	*glomeratum*			I	Sessile-headed Clover
Trifolium	*hirtum*			I	Rose Clover
Trifolium	*microcephalum*			N	Small-headed Clover
Trifolium	*repens*			I	White Clover
Trifolium	*variegatum*			N	White-tipped Clover

Appendix C-Table 2. Vascular Plant Species Identified During 2018 Field Survey; Deer Creek DCID Dam Fish Passage Project; Tehama County, CA; Surveys and Species ID by John Dittes

Trifolium	*wildenovii*			N	Tomcat Clover
Vicia	*villosa*			I	Winter Vetch
FAGACEAE					**OAK FAMILY**
Quercus	*douglasii*			N	Blue Oak
Quercus	*lobata*			N	Valley Oak
Quercus	*wislizenii*	var.	*wislizeni*	N	Interior Live Oak
GENTIANACEAE					**GENTIAN FAMILY**
Centaurium	*tenuiflorum*			I	June Centaury
Zeltnera	*venusta*			N	Charming Centaury
GERANIACEAE					**GERANIUM FAMILY**
Erodium	*botrys/brachycarpum*			I	Long-beaked Stork's-bill
Erodium	*cicutarium*			I	Red-stemmed Filaree
Erodium	*moschatum*			I	White-stemmed Filaree
Geranium	*carolinianum*			I	Carolina Geranium
Geranium	*molle*			I	Dove's-foot Geranium
HYDROCHARITACEAE					**WATERWEED FAMILY**
Elodea	*canadensis*			N	Canadian Waterweed
HYPERICACEAE					**ST. JOHN'S-WORT FAMILY**
Hypericum	*anagalloides*			I	Tinker's-penny
Hypericum	*perforatum*			I	Klamathweed
JUNCACEAE					**RUSH FAMILY**
Juncus	*balticus*	ssp.	*ater*	N	Baltic Rush
Juncus	*bufonius*	var.	*bufonius*	N	Common Toad Rush
Juncus	*effusus*			N	Pacific Rush
LAMIACEAE					**MINT FAMILY**
Lamium	*amplexicaule*			I	Giraffe's Head
Marrubium	*vulgare*			I	Horehound
Pogogyne	*zizyphoroides*			N	Sacramento Valley Pogogyne
Stachys	*sp.*			N	Pre-flowering Hedge-nettle
Trichostema	*lanceolatum*			N	Vinegar-weed
Umbellularia	*californica*			N	California Bay
LILIACEAE					**LIULY FAMILY**
Calochortus	*luteus*			N	Yellow Mariposa Lily
LYTHRACEAE					**LOOSESTRIFE FAMILY**
Lythrum	*hyssopifolium*			I	Hyssop Loosestrife
MONTIACEAE					**PURSELANE FAMILY**
Claytonia	*parviflora*			N	Small-flowered Miner's Lettuce
MORACEAE					**MULBERRY FAMILY**
Ficus	*carica*			I	Edible Fig
MYRSINACEAE					**MYRSINE FAMILY**
Anagallis	*arvensis*			I	Scarlet Pimpernel
OLEACEAE					**OLIVE FAMILY**
Fraxinus	*latifolia*			N	Oregon Ash
ONAGRACEAE					**EVENNING PRIMROSE FAMILY**
Clarkia	*purpurea*	ssp.	*quadrivulnera*	N	Purple Clarkia
Clarkia	*unguiculata*			N	Elegant Clarkia
Epilobium	*ciliatum*			N	Willowherb
Epilobium	*cleistogamnum*			N	Cleistogamous Spike-primrose
Epilobium	*brachycarpum*			N	Tall Annual Willowherb
Epilobium	*torreyi*			N	Torrey's Spike-primrose
Ludwigia	*peploides*	ssp.	*peploides*	N	Yellow Waterweed
OROBANCHACEAE					**BROOMRAPE FAMILY**
Castilleja	*attenuata*			N	Valley Tassel
Triphysaria	*eriantha*	ssp.	*eriantha*	N	Johnnytuck
PAPAVERACEAE					**POPPY FAMILY**
Eschscholzia	*californica*			N	California Poppy
Eschscholzia	*lobbii*			N	Fryingpan Poppy
PHRYMACEAE					**LOPSEED FAMILY**
Erythranthe	*glaucescens*			N	Sheild-bracted Monkey-flower
Erythranthe	*gutattus*			N	Seep Monkey-flower
PINACEAE					**PINE FAMILY**
Pinus	*sabiniana*			N	Foothill Pine
PLANTAGINACEAE					**PLANTAIN FAMILY**
Plantago	*coronopus*			I	Cut-leaved Plantain
Plantago	*erecta*			N	Erect Plantain
Plantago	*lanceolata*			I	English Plantain
Plantago	*elongata*			N	Elongate Plantain
Veronica	*peregrina*	ssp.	*xalapensis*	N	Purslane Speedwell
PLATANACEAE					**SYCAMORE FAMILY**
Patanus	*racemosa*			N	Western Sycamore

Appendix C-Table 2. Vascular Plant Species Identified During 2018 Field Survey; Deer Creek DCID Dam Fish Passage Project; Tehama County, CA; Surveys and Species ID by John Dittes

POACEAE					**GRASS FAMILY**
Aira	*caryophyllea*			I	Silver European Hairgrass
Aristida	*oligantha*			N	Three-awn
Avena	*barbata*			I	Slender Wild Oat
Brachypodium	*distachyon*			I	False Brome
Briza	*minor*			I	Lesser Quaking-grass
Bromus	*hordeaceus*			I	Soft Chess
Bromus	*madritensis*	ssp.	*madritensis*	I	Foxtail Chess
Bromus	*madritensis*	ssp.	*rubens*	I	Red Brome
Bromus	*sterilis*			I	Proverty Brome
Cynodon	*dactylon*			I	Bermuda Grass
Cynosurus	*echinatus*			I	Hedgehog Dogtail
Deschampsia	*danthonioides*			N	Annual Hairgrass
Elymus	*caput-medusae*			I	Medusa-head
Festuca	*arundinacea*			I	Tall Fescue
Festuca	*perennis*			I	Annual Ryegrass
Festuca	*bromoides*			I	Brome Fescue
Festuca	*microstachys*			N	Small Fescue
Festuca	*myuros*			I	Rattail Sixweeks Grass
Gastridium	*phleoides*			I	Nitgrass
Glyceria	*declinata*			I	Low Mannagrass
Hordeum	*marinum*	ssp.	*gussoneanum*	I	Mediterranean Barley
Hordeum	*murinum*	ssp.	*leporinum*	I	Hare Wall Barley
Koeleria	*gerardii*			I	Bristly Koeler's-grass
Muhlenbergia	*rigens*			N	Deergrass
Paspalum	*dilatatum*			I	Dallisgrass
Poa	*annua*			I	Annual Bluegrass
Poa	*pratensis*	ssp.		I	Kentucky Blugrass
Poa	*secunda*	ssp.	*secunda*	N	One-sided Bluegrass
Polypogon	*monspeliensis*			I	Annual Beard Grass
Stipa	*lemmonii*	var,	*lemmonii*	N	Lemmon's Needlegrass
POLEMONIACEAE					**PHLOX FAMILY**
Gilia	*tricolor*	ssp.	*tricolor*	N	Bird's-eye Gilia
Leptosiphon	*ciliatus*			N	Whiskerbrush
Navarretia	*heterandra*			N	Tehama Navarretia
Navarretia	*leucocephala*	ssp.	*leucocephala*	N	White-flowered Navarretia
Navarretia	*pubescens*			N	Downy Navarretia
Navarretia	*tagetina*			N	Marigold Navarretia
POLYGONACEAE					**BUCKWHEAT FAMILY**
Chorizanthe	*polygonoides*	var.	*polygonoides*	N	Knotweed Spineflower
Eriogonum	*nudum*	var.	*pubiflorum*	N	Naked-stemmed Buckwheat
Polygonum	*aviculare*	ssp.	*depressum*	I	Common Knotweed
Polygonum	*bidwelliae*			N	Bidwell's Knotweed
Pterostegia	*drymerioides*			N	Granny's Hairnet
Rumex	*acetosella*			I	Common Sheep Sorrel
Rumex	*crispus*			I	Curly Dock
POLYPODIACEAE					**POLYPODY FAMILY**
Polypodium	*calirhiza*			N	Intermediate Polypody
PTERIDACEAE					**BRACKEN FAMILY**
Pentagramma	*triangularis*	ssp.	*triangularis*	N	Gold-backed Fern
RANUNCULACEAE					**BUTTERVUP FAMILY**
Delphinum variegatum				N	Royal Larkspur
Ranunculus	*aquatilis*			N	Water Buttercup
Ranunculus	*muricatus*			I	Prickle-seeded Buttercup
RHAMNACEAE					**BUCKTHORN FAMILY**
Ceanothus	*cuneatus*	var.	*cuneatus*	N	Buckbrush
Frangula	*californica*	ssp.	*tomentella*	N	Hoary Coffeeberry
Rhamnus	*ilicifolia*			N	Holly-leaved Redberry
ROSACEAE					**ROSE FAMILY**
Aphanes	*occidentalis*			N	Western Lady's-mantle
Rosa	*californica*			N	California Rose
Rubus	*armeniacus*			I	Himalayan Blackberry
Rubus	*ursinus*			N	California Blackberry
RUBIACEAE					**MADDER FAMILY**
Cephalanthus	*occidentalis*	var.	*californicus*	N	California Button-willow
Galium	*aparine*			N	Cleavers
Galium	*parisiense*			I	Wall Bedstraw
SALICACEAE					**WILLOW FAMILY**
Populus	*fremontii*			N	Fremont's Cottonwood
Salix	*exigua*			N	Sandbar Willow
Salix	*gooddingii*			N	Black Willow

Appendix C-Table 2. Vascular Plant Species Identified During 2018 Field Survey; Deer Creek DCID Dam Fish Passage Project; Tehama County, CA; Surveys and Species ID by John Dittes

Salix	*lasiolepis*			N	Arroyo Willow
SAPINDACAE					**SOAPBERRY FAMILY**
Aesculus	*californica*			N	California Buckeye
SAXIFRAGACEAE					**SAXIFRAGE FAMILY**
Darmera	*peltata*			N	Indian-rhubarb
SELAGINACEAE					**SPIKEMOSS FAMILY**
Selaginella	*hansenii*			N	Hansen's Spike-moss
SMILACACEAE					**SMILAX FAMILY**
Smilacina	*californica*			N	California Greenbrier
SOLANACEAE					**NIGHTSHADE FAMILY**
Solanum	*americanum*			N	American Black Nightshade
TECOPHILAECEAE					**BRODIAEA FAMILY**
Odontostomum	*hartwegii*			N	Hartweg's Odontostomum
THEMIDACEAE					**BRODIAEA FAMILY**
Brodiaea	*californica*			N	California Brodiaea
Brodiaea	*sp.*			N	Brodiaea
Brodiaea	*minor*			N	Purdy's Brodiaea
Dichelostemma	*capitatum*			N	Blue Dicks
Dichelostemma	*multiflorum*			N	Round-toothed Ookow
Dichelostemma	*volubile*			N	Twining Ookow
Triteleia	*brdgesii*			N	Bridge's Tritleia
Triteleia	*hyacinthina*			N	Wild Hyacinth
VITACEAE					**GRAPE FAMILY**
Vitis	*californica*			N	California Wild Grape
ZYGOPHYLLACEAE					**CREOSOTE FAMILY**
Tribulus	*terretris*			I	Puncture-vine
"N" Indicates Native					
"I" Indicates Non-Native					

Appendix D

Potentially-occurring Special-status Faunal Species

APPENDIX D
Potentially-occurring Special-status Faunal Species
Deer Creek DCID Dam Fish Passage Project

SPECIES	LISTING STATUS		TYPICAL HABITAT	POTENTIAL FOR OCCURRENCE
Common Name (*Scientific Name*)	Federal	State		
AMPHIBIANS & REPTILES				
Western Pond Turtle *(Emys marmorata)*	---	CSC	In or near aquatic habitats in slow-moving water. Often associated with basking substrate (e.g. logs, large rocks, etc.) Use adjacent uplands to nest and overwinter.	Known to occur. Observed in Deer Creek within the study area during site surveys.
Foothill Yellow-legged Frog *(Rana boylii)*	---	CT / CSC	In or near rocky streams in a variety of habitats. Rarely encountered far from permanent water.	May occur. Potential breeding habitat present in Deer Creek within the study area. Known to occur approximately 15 river miles upstream of the study area (M. Johnson pers. comm. 2018, CDFW 2018a). Not observed during TES site surveys. Not observed during CDFW site surveys (P. Bratcher pers. comm.).
California Red-legged Frog *(Rana draytonii)*	T	CSC	Slow-moving or pooled aquatic habitats with overhanging vegetation.	Not likely to occur. The study area is well outside of the current known range of the species and this species is believed to have been extirpated from the Sacramento Valley (U.S. Fish and Wildlife Service 2002). Not observed during site surveys, however protocol-level surveys were not conducted.
Western Spadefoot *(Spea hammondii)*	---	CSC	Grasslands, and occasionally, valley-foothill hardwood woodlands with shallow temporary pools for breeding.	May occur. Not likely to breed within the study area due to a lack of suitable breeding habitat. Potential breeding habitat present in a large vernal pool near the study area; no larvae observed during intensive single-event large branchiopod survey (Eggeman 2018). Not observed during TES site surveys, however targeted surveys were not conducted.
Giant Garter Snake *(Thamnophis gigis)*	T	T	Highly aquatic. Primarily associated with marshes and sloughs, less with slow-moving creeks. Absent from larger rivers.	Not likely to occur. The study area is well outside of the current known range of the species and this species. Not observed during site surveys.

APPENDIX D
Potentially-occurring Special-status Faunal Species
Deer Creek DCID Dam Fish Passage Project

SPECIES	LISTING STATUS		TYPICAL HABITAT	POTENTIAL FOR OCCURRENCE
Common Name (*Scientific Name*)	Federal	State		
BIRDS				
Tricolored Blackbird *(Agelaius tricolor)*	---	CE / CSC	Breeds colonially in tall emergent vegetation or sometimes in tall, upland herbaceous vegetation in areas large enough to support approximately 50 pairs. Forages in grasslands and agricultural lands.	May occur. Observed in the general vicinity of the study area during site surveys. Not likely to nest within the study area, due to a lack of suitable nesting habitat of sufficient size. May forage within the study area if nesting in the general area.
Grasshopper Sparrow *(Ammodramus savannarum)*	---	CSC	Uses short- to mid-height moderately open grasslands with scattered shrubs and tall forbs. Ground nesting in depressions near the base of overhanging grass or forb clumps.	May occur. Potential nesting and foraging habitat present adjacent to the access haul routes. Not observed during site surveys.
Golden Eagle *(Aquila chrysaetos)*	---	FP	Uses rolling foothills and mountain terrain, wide arid plateaus deeply cut by streams and canyons, open mountain slopes, and cliffs and rock outcrops. Generally inhabit more open country.	Known to occur. Observed during site surveys. Not likely to nest within the study area due to a lack of preferred nesting habitat. May forage within the study area.
Short-eared Owl *(Asio flammeus)*	---	CSC	Uses open areas with few trees including grasslands, prairies, dunes, meadows, irrigated areas and emergent wetlands. Nests in open country supporting rodents and herbaceous cover sufficient to conceal ground nests.	May occur. Not likely to nest due to the fact that the study area is well outside of the current known breeding range for the species. Potential winter foraging and roosting habitat is present within the study area. Not observed during site surveys.
Long-eared Owl *(Asio otus)*	---	CSC	Riparian, live oak or conifer thickets with small, densely canopied trees used for roosting and nesting. Generally forages in open areas.	May occur. Potential nesting and foraging habitat present within the study area. Not observed during site surveys.

APPENDIX D
Potentially-occurring Special-status Faunal Species
Deer Creek DCID Dam Fish Passage Project

SPECIES	LISTING STATUS		TYPICAL HABITAT	POTENTIAL FOR OCCURRENCE
Common Name (*Scientific Name*)	Federal	State		
Burrowing Owl *(Athene cunicularia)*	---	CSC	Uses open grasslands, deserts or scrublands. Nests in small mammal burrows, pipes, culverts or nesting boxes. Species is gregarious.	May occur. Low likelihood of nesting within the study area due to a lack of preferred nesting habitat, however potential nesting, roosting and foraging habitat for this species occurs adjacent to the study area. May forage within the study area if nesting or roosting within the general area or during the winter. Not observed during site surveys. No potential burrows observed during site surveys.
Swainson's Hawk *(Buteo swainsoni)*	---	T	Open desert, grassland or cropland containing scattered large trees, small groves or riparian woodlands. Nests in scattered trees, small groves, sparsely vegetated flatlands or in riparian woodlands.	May occur. Observed nesting in the general vicinity of the study area during site surveys. Potential nesting and foraging habitat present within the study area.
Vaux's Swift *(Chaetura vauxi)*	---	CSC	Nests in large hollow trees and snags in redwood, Douglas fir and other conifer habitats. Often nests in large colonies. Forages widely, but prefers rivers and lakes.	Known to occur. Observed during site surveys. Not likely to nest due to the fact that the study area is well outside of the known breeding range and due to a lack of suitable nesting habitat. May forage within the study area during spring and fall migration.
Northern Harrier *(Circus cyaneus)*	---	CSC	Nests and forages in a variety of open habitats such as grasslands, rangelands, agricultural lands, meadows and emergent wetlands that provide adequate vegetative cover, prey, and scattered hunting, plucking, and lookout perches such as shrubs or fence posts. Nests on the ground, mostly within patches of dense, often tall, vegetation in undisturbed areas.	Known to occur. Observed during site surveys. Potential nesting and foraging habitat present within the study area.

APPENDIX D
Potentially-occurring Special-status Faunal Species
Deer Creek DCID Dam Fish Passage Project

SPECIES	LISTING STATUS		TYPICAL HABITAT	POTENTIAL FOR OCCURRENCE
Common Name (*Scientific Name*)	Federal	State		
Western Yellow-billed Cuckoo *(Coccyzus americanus occidentalis)*	T	E	Dense deciduous riparian cover, especially willow with low-level understory foliage, near slow-moving water with high humidity, utilizes riparian forests and adjacent orchards for foraging. Requires large habitat patch sizes, greater than or equal to seven acres in size for nesting.	May occur. Not likely to nest within the study area due to lack of minimum nesting habitat acreage requirements. May forage within the study area if nesting within the general area. Historic records of potential nesting in the lower 0.5 mile reach of Deer Creek near the Sacramento River, approximately ten river miles downstream of the study area (CDFW 2018a). Not observed during site surveys.
Black Swift *(Cypseloides niger)*	---	CSC	Breeds in small colonies on cliffs behind or adjacent to waterfalls in deep canyons and sea-bluffs above surf. Forages widely.	May occur. Not likely to nest due to the fact that the study area is well outside of the known breeding range and due to a lack of suitable nesting habitat. May forage within the study area during spring and fall migration. Not observed during site surveys.
White-tailed Kite *(Elanus leucurus)*	---	FP	Nests in dense tree stands near open foraging areas. Forages in open grassland and agricultural areas.	May occur. Potential nesting and foraging habitat present within the study area. Not observed during site surveys.
Little Willow Flycatcher *(Empidonax traillii brewsteri)*	---	E	Nests in upper elevation riparian and wet meadow habitats.	Known to occur. Observed during site surveys. Not likely to nest due to the fact that the study area is outside of the known breeding range. May forage within the study area during spring and fall migration.
American Peregrine Falcon (*Falco peregrinus anatum*)	D	D / FP	Riparian areas, coastal and inland wetlands are important habitats. Breeds mostly in woodland, forest and coastal habitats on cliff ledges, occasionally in snag cavities and in other used raptor nests.	Known to occur. Observed during site surveys. Potential nesting habitat present in the vicinity of the study area on high voltage power line towers. May forage within the project area if nesting within the general area or during the winter.

APPENDIX D
Potentially-occurring Special-status Faunal Species
Deer Creek DCID Dam Fish Passage Project

SPECIES	LISTING STATUS		TYPICAL HABITAT	POTENTIAL FOR OCCURRENCE
Common Name (*Scientific Name*)	Federal	State		
Bald Eagle *(Haliaeetus leucocephalus)*	D	E / FP	Nests in large trees with open branchwork, usually near permanent water including rivers, streams and lakes / reservoirs. Forages over large bodies of water with abundant fish.	Known to occur. Observed during site surveys. Potential nesting and foraging habitat present within the study area. Low likelihood of nesting within the study area due the lack of existing nests. May forage within the study area if nesting in the general area.
Yellow-breasted Chat *(Icteria virens)*	---	CSC	Nests in dense shrubs along streams and rivers.	Known to occur. Observed during site surveys. Potential nesting and foraging habitat present within the study area.
Loggerhead Shrike *(Lanius ludovicianus)*	---	CSC	Prefers open habitats with scattered trees, shrubs, posts, fences and other perches. Found primarily in valley-foothill and desert habitats.	Known to occur. Observed during site surveys. Potential nesting and foraging habitat present within the study area.
American White Pelican *(Pelecanus erythrorhynchos)*		CSC	Rests in day and roosts at night along edge of water, on beaches, sandbars, or old driftwood, but never in trees. Nests at large freshwater and saltwater lakes, usually on small islands or remote dikes.	May occur. Observed flying at high elevations over the project site during site surveys. Not likely to nest due to the fact that the study area is well outside of the known breeding range and due to a lack of suitable nesting habitat. Marginal foraging habitat present within the study area.
Bank Swallow *(Riparia riparia)*	---	T	Nests in excavated burrows in fine-textured vertical stream banks.	May occur. Not likely to nest within the study area due to a lack of suitable nesting habitat. May forage within the study area if nesting in the general area. Known to nest along Deer Creek approximately eight miles downstream of the study area (Bratcher 2018). Not observed during site surveys.
Yellow Warbler *(Setophaga petechia)*	---	CSC	Nests in riparian habitats, montane chaparral and open conifer forests with substantial amounts of brush.	May occur. Potential nesting and foraging habitat present within the study area. Not observed during site surveys.

APPENDIX D
Potentially-occurring Special-status Faunal Species
Deer Creek DCID Dam Fish Passage Project

SPECIES	LISTING STATUS		TYPICAL HABITAT	POTENTIAL FOR OCCURRENCE
Common Name (*Scientific Name*)	Federal	State		
Least Bell's Vireo *(Vireo bellii pusillus)*	E	E	Nests in understory vegetation in dense willow-dominated riparian habitats with well-developed understory. High and low shrub layers are used for foraging. Usually nests in willows but may also use wild rose and coast live oak.	Not likely to occur. The study area is well outside the current known range of the species. Not observed during site surveys.
FISH				
Green Sturgeon (Southern DPS) (*Acipenser medirostris*)	T / SC	CSC	Requires cool freshwater for spawning in large cobble. Spawning takes place in deep, fast water.	Not likely to occur. Study area lacks suitable spawning habitat. Juvenile rearing likely precluded due to diversion dam downstream of the study area. Not known to occur within the study area reach of Deer Creek (M. Johnson pers. comm.). Not observed during TES site surveys, however intensive fish surveys were not conducted.
Riffle Sculpin *(Cottus gulosus)*	---	CSC	Found exclusively in permanent coldwater streams where riffles and rocky substrates predominate. Prefer shallow fast-flowing waters.	Known to occur. Has been observed within the study area reach of Deer Creek (M. Johnson pers. comm.). Not observed during TES site surveys, however intensive fish surveys were not conducted.
Pacific Lamprey *(Entosphenus tridentatus)*	---	CSC	Occupies habitat downstream of impassable dams in Sacramento River tributaries primarily on the valley floor and foothills. Adults spawn in gravelly riffles in river tributary streams. Ammocoetes (young) use soft stream sediments.	Known to occur. Spawning adults observed in Deer Creek within the study area during TES site surveys. Adults also observed within the study area during CDFW foothill yellow-legged frog surveys (P. Bratcher pers. comm.).
Delta Smelt (*Hypomesus transpacificus*)	T	E	Uses estuaries and the freshwater edge of the mixing zone at the saltwater-freshwater interface.	Not likely to occur. The study area is well outside the current known range of the species. Not observed during site surveys.

APPENDIX D
Potentially-occurring Special-status Faunal Species
Deer Creek DCID Dam Fish Passage Project

SPECIES	LISTING STATUS		TYPICAL HABITAT	POTENTIAL FOR OCCURRENCE
Common Name (*Scientific Name*)	Federal	State		
River Lamprey (*Lampetra ayresi*)	---	CSC	Adults spawn in gravelly riffles in river tributary streams. Ammocoetes (young) use silty backwaters and eddies.	Not likely to occur. Known to occur in the Sacramento River but is rarely observed in tributaries, and only near the river (R.J. Bottario pers. comm.). Not well studied in Deer Creek. Not observed during site surveys, however intensive fish surveys were not conducted.
Hardhead (*Mylopharodon conocephalus*)	---	CSC	Low to mid-elevation streams up to 4,900 feet in elevation in the Sacramento drainage. Also present in the San Joaquin River and Russian River. Clear, deep pools with sand, gravel, and boulder substrate. Slow water velocity. Not found where exotic centrarchids predominate.	Known to occur. Has been observed within the study area reach of Deer Creek (M. Johnson pers. comm.). Not observed during site surveys, however intensive fish surveys were not conducted.
Central Valley Steelhead *(Oncorhynchus mykiss)*	T	---	Spawns in cool, clear water with clean spawning gravel in the Sacramento River and many tributaries.	Known to occur. Adults are known to migrate through, and spawn in Deer Creek, upstream of the study area, and juveniles are known to rear in the study area (M. Johnson pers. comm.). Rainbow trout / steelhead were observed during TES site surveys. Juvenile salmonids were observed during TES site surveys, however they were not identified to species and intensive fish surveys were not conducted.
Central Valley Fall- / Late Fall-run Chinook Salmon *(Oncorhynchus tshawytscha)*	SC	CSC	Spawns in cool, clear water with clean spawning gravel in the Sacramento River and many tributaries.	Known to occur. Adults are known to spawn in Deer Creek, within the study area (M. Johnson pers. comm.). Juveniles are known to rear in the study area (M. Johnson pers. comm.). Juvenile salmonids were observed during TES site surveys, however they were not identified to species and intensive fish surveys were not conducted.

APPENDIX D
Potentially-occurring Special-status Faunal Species
Deer Creek DCID Dam Fish Passage Project

SPECIES	LISTING STATUS		TYPICAL HABITAT	POTENTIAL FOR OCCURRENCE
Common Name (*Scientific Name*)	Federal	State		
Central Valley Spring-run Chinook Salmon *(Oncorhynchus tshawytscha)*	T	T	Spawns in the late summer / early fall in cool, clear water with clean spawning gravel in the Sacramento River and some tributaries.	Known to occur. Adults are known to migrate through and spawn in Deer Creek, upstream of the study area and juveniles rear in the study area (M. Johnson pers. comm.). Juvenile salmonids were observed during TES site surveys, however they were not identified to species and intensive fish surveys were not conducted.
Sacramento River Winter-run Chinook Salmon *(Oncorhynchus tshawytscha)*	E	E	Spawns in the summer in cool, clear water with clean spawning gravel, almost exclusively in the main-stem of the Sacramento River.	Not likely to occur. Not known to use Deer Creek for spawning (M. Johnson pers. comm.). Non-natal rearing may occur in the lower reaches of Deer Creek, however juveniles are not likely to pass the Stanford Vina diversion, located downstream of the study area (M. Johnson pers. comm.). Juvenile salmonids were observed during TES site surveys, however they were not identified to species and intensive fish surveys were not conducted.
INVERTEBRATES				
Conservancy Fairy Shrimp *(Branchinecta conservatio)*	E	---	Vernal pool and vernal pool-like habitats. Tends to be associated with large, turbid vernal pool and vernal playas.	Not likely to occur. The study area lacks preferred habitat in the form of large vernal pools. Not observed during site surveys, however protocol-level surveys were not conducted.
Vernal Pool Fairy Shrimp *(Branchinecta lynchi)*	T	---	Vernal pool and vernal pool-like habitats.	May occur. Potential habitat is present in seasonal wetlands adjacent to, and within the south access haul road (Eggeman 2018). Not observed during site surveys, however protocol-level surveys were not conducted.

APPENDIX D
Potentially-occurring Special-status Faunal Species
Deer Creek DCID Dam Fish Passage Project

SPECIES	LISTING STATUS		TYPICAL HABITAT	POTENTIAL FOR OCCURRENCE
Common Name (*Scientific Name*)	Federal	State		
Valley Elderberry Longhorn Beetle *(Desmocerus californicus dimorphus)*	T	---	Elderberry shrubs with stems 1 inch or greater in diameter.	May occur. Potential habitat is present within the study area. Not observed during site surveys. No exit holes observed in elderberry shrubs during site surveys.
Vernal Pool Tadpole Shrimp *(Lepidurus packardi)*	E	---	Vernal pool and ephemeral wetland habitats.	May occur. Potential habitat is present in seasonal wetlands adjacent to, and within the south access haul road (Eggeman 2018). Known to occur in a large vernal pool near the south access haul route (Eggeman 2018). Not observed within the study area during site surveys, however protocol-level surveys were not conducted.
MAMMALS				
Pallid Bat *(Antrozous pallidus)*	---	CSC	Uses a wide variety of habitats including grassland, shrubland, woodland and forest. Roosts in caves, mines, crevices, hollow trees and buildings.	Known to occur. Detected within the study area during acoustical site surveys. Potential roosting and foraging habitat present within the study area.
Ringtail *(Bassariscus astutus)*	---	FP	Riparian habitats and forest and shrub habitats near rocky areas or riparian areas from low to middle elevations.	May occur. Potential denning and foraging habitat present within the study area. Not observed during site surveys.

APPENDIX D
Potentially-occurring Special-status Faunal Species
Deer Creek DCID Dam Fish Passage Project

SPECIES	LISTING STATUS		TYPICAL HABITAT	POTENTIAL FOR OCCURRENCE
Common Name (*Scientific Name*)	Federal	State		
Gray Wolf (*Canis lupis*)	E	E	Uses a variety of habitats including temperate forests, mountains, tundra, taiga and grasslands.	Low likelihood of occurrence. Potential denning and foraging habitat present within the study area, however there is an extremely low likelihood of occurrence due to the very low density of wolves in California and the extremely large territory wolves occupy. Several detections of one adult migrating through the general area have been recorded in eastern Tehama County in 2011, 2012 and 2013 (CDFW 2018c). Not observed during site surveys.
Townsend's Big-eared Bat *(Corynorhinus townsendii)*	---	CSC	Roosts in caves, mines, tunnels, buildings and rarely in large hollow trees. Very sensitive to human disturbance; however, in some instances it can become habituated to reoccurring and predictable human activity.	May occur. Not likely to roost within the study area due to a lack of preferred roosting habitat. May forage within the study area if roosting in the general vicinity. Not detected during acoustical site surveys, however this species is difficult to detect acoustically.
Spotted Bat *(Euderma maculatum)*	---	CSC	Prefers to roost in rock crevices on cliffs but occasionally roosts in caves and buildings. Forages over water in a variety of habitats.	May occur. Not likely to roost within the study area due to a lack of suitable roosting habitat. May forage in the study area if roosting in the general vicinity. Not detected during acoustical site surveys.
Western Mastiff Bat *(Eumops perotis)*	---	CSC	Roosts in crevices in cliff faces, high buildings, trees and tunnels. Occurs in open arid to semi-arid habitats with abundant roost sites.	May occur. Not likely to roost within the study area due to a lack of suitable roosting habitat. May forage in the study area if roosting in the general vicinity. Not detected during acoustical site surveys.
Western Red Bat (*Lasiurus blossevillii*)	---	CSC	Roosts primarily in trees, less often in shrubs. Roost sites often are in edge habitats adjacent to streams, fields, or urban areas. Prefers edges or habitat mosaics that have trees for roosting and open areas for foraging.	May occur. Potential roosting and foraging habitat present within the study area. Not detected during acoustical site surveys.

APPENDIX D
Potentially-occurring Special-status Faunal Species
Deer Creek DCID Dam Fish Passage Project

SPECIES	LISTING STATUS		TYPICAL HABITAT	POTENTIAL FOR OCCURRENCE
Common Name (*Scientific Name*)	Federal	State		

LEGEND:

E Endangered
T Threatened
CE Candidate for listing as Endangered
CT Candidate for listing as Threatened
PE Proposed for listing as Endangered
PT Proposed for listing as Threatened
D Delisted
PD Proposed for Delisting
CSC California Species of Special Concern
FP California Fully Protected
SC NMFS Species of Concern

Appendix E

Faunal Species Observed Within or Near the Project Site

APPENDIX E
Faunal Species Observed Within or Near the Project Site
Deer Creek DCID Fish Passage Project

COMMON NAME	SCIENTIFIC NAME	LISTING STATUS	
		Federal	State
AMPHIBIANS & REPTILES			
Bullfrog*	*Rana catesbeiana*		
Common King Snake	*Lampropeltis getula*		
Gopher Snake	*Pituophis melanoleucus*		
Mountain Garter Snake	*Thamnophis elegans elegans*		
Pacific Chorus Frog	*Pseudacris regilla*		
Southern Alligator Lizard	*Gerrhonotus multicarinatus*		
Western Fence Lizard	*Sceloporus occidentalis*		
Western Pond Turtle	*Emys marmorata*		CSC
Western Rattlesnake	*Crotalus viridis*		
Western Toad (eggs)	*Bufo boreas*		
Western Whiptail	*Aspidoscelis tigris*		
BIRDS			
Acorn Woodpecker	*Melanerpes formicivorus*		
American Bald Eagle	*Haliaeetus leucocephalus*	D	E / FP
American Crow	*Corvus brachyrhynchos*		
American Kestrel	*Falco sparverius*		
American Peregrine Falcon	*Falco peregrinus anatum*	D	D / FP
American Robin	*Turdus migratorius*		
American White Pelican	*Pelecanus erythrorhynchos*		CSC
Anna's Hummingbird	*Calypte anna*		
Ash-throated Flycatcher	*Myiarchus cinerascens*		
Barn Swallow	*Hirundo rustica*		
Belted Kingfisher	*Ceryle alcyon*		
Bewick's Wren	*Thryomanes bewickii*		
Black Phoebe	*Sayornis nigricans*		
Black-headed Grosbeak	*Pheucticus melanocephalus*		
Brewer's Blackbird	*Euphagus cyanocephalus*		
Brown-headed Cowbird	*Molothrus ater*		
Bullock's Oriole	*Icterus bullockii*		
Bushtit	*Psaltriparus minimus*		
California Horned Lark	*Eremophila alpestris actia*		
California Quail	*Callipepla californica*		
Canada Goose	*Branta canadensis*		
Cinnamon Teal	*Anas cyanoptera*		
Common Merganser	*Mergus merganser*		
Common Raven	*Corvus corax*		
Cooper's Hawk	*Accipiter cooperii*		
Dark-eyed Junco	*Junco hyemalis*		
Downy Woodpecker	*Picoides pubescens*		
Eurasian Collared-Dove*	*Streptopelia decaocto*		
European Starling*	*Sturnus vulgaris*		
Ferruginous Hawk	*Buteo regalis*		
Golden Eagle	*Aquila chrysaetos*		FP
Golden-crowned Sparrow	*Zonotrichia atricapilla*		

APPENDIX E
Faunal Species Observed Within or Near the Project Site
Deer Creek DCID Fish Passage Project

COMMON NAME	SCIENTIFIC NAME	LISTING STATUS	
		Federal	State
Great Blue Heron	*Ardea herodias*		
Great Egret	*Casmerodius albus*		
Greater Yellowlegs	*Tringa melanoleuca*		
Great-tailed Grackle	*Quiscalus mexicanus*		
House Finch	*Carpodacus mexicanus*		
House Sparrow*	*Passer domesticus*		
House Wren	*Troglodytes aedon*		
Killdeer	*Charadrius vociferous*		
Lark Sparrow	*Chondestes grammacus*		
Lesser Goldfinch	*Spinus psaltria*		
Lewis's Woodpecker	*Melanerpes lewis*		
Little Willow Flycatcher	*Empidonax traillii brewsteri*		E
Loggerhead Shrike	*Lanius ludovicianus*		CSC
Mallard	*Anas platyrhynchos*		
Mourning Dove	*Zenaida macroura*		
Northern Flicker	*Calaptes auratus*		
Northern Harrier	*Circus cyaneus*		CSC
Northern Mockingbird	*Mimus polyglottos*		
Nuttall's Woodpecker	*Picoides nuttallii*		
Oak Titmouse	*Parus inornatus*		
Osprey	*Pandion haliaetus*		
Phainopepla	*Phainopepla nitens*		
Red-shouldered Hawk	*Buteo lineatus*		
Red-tailed Hawk	*Buteo jamaicensis*		
Red-winged Blackbird	*Agelaius phoeniceus*		
Rock Dove*	*Columba livia*		
Rough-legged Hawk	*Buteo lagopus*		
Ruby-crowned Kinglet	*Regulus calendula*		
Savannah Sparrow	*Passerculus sandwichensis*		
Say's Phoebe	*Sayornis saya*		
Snow Goose	*Chen caerulescens*		
Spotted Sandpiper	*Actitis macularia*		
Swainson's Hawk	*Buteo swainsoni*		T
Townsend's Solitaire	*Myadestes townsendi*		
Tricolored Blackbird	*Agelaius tricolor*		CE / CSC
Turkey Vulture	*Cathartes aura*		
Vaux's Swift	*Chaetura vauxi*		CSC
Western Bluebird	*Sialia mexicana*		
Western Kingbird	*Tyrannus verticalis*		
Western Meadowlark	*Sturnella neglecta*		
Western Scrub-Jay	*Aphelocoma californica*		
Western Tanager	*Piranga ludoviciana*		
Western Wood-Pewee	*Contopus sordidulus*		
White-breasted Nuthatch	*Sitta carolinensis*		
White-crowned Sparrow	*Zonotrichia leucophrys*		
Wild Turkey*	*Meleagris gallopavo*		

APPENDIX E
Faunal Species Observed Within or Near the Project Site
Deer Creek DCID Fish Passage Project

COMMON NAME	SCIENTIFIC NAME	LISTING STATUS	
		Federal	State
Wilson's Warbler	*Cardellina pusilla*		
Wood Duck	*Aix sponsa*		
Yellow-breasted Chat	*Icteria virens*		CSC
Yellow-rumped Warbler	*Dendroica coronata*		
FISH			
Pacific Lamprey	*Entosphenus tridentatus*		CSC
unknown Juvenile Salmonid	*Oncorhynchus sp.*		
Rainbow Trout / Steelhead	*Oncorhynchus mykiss*	T	
INVERTEBRATES			
unknown Crayfish*	*Unknown species*		
Vernal Pool Tadpole Shrimp	*Lepidurus packardi*	E	
MAMMALS			
Big Brown Bat	*Eptesicus fuscus*		
Black-tailed Jackrabbit	*Lepus californicus*		
Brazilian Free-tailed Bat	*Tadarida brasiliensis*		
California Bat	*Myotis californicus*		
California Ground Squirrel	*Spermophilus beecheyi*		
Canyon Bat	*Parastrellus hesperus*		
Coyote	*Canis latrans*		
Hoary Bat	*Lasiurus cinereus*		
Pallid Bat	*Antrozous pallidus*		CSC
Raccoon (tracks)	*Procyon lotor*		
unknown Vole	*Microtus sp.*		
Western Gray Squirrel	*Sciurus griseus*		
Yuma Bat	*Myotis yumanensis*		

LEGEND:

E = Endangered
T = Threatened
CE = Candidate for listing as Endangered
CT = Candidate for listing as Threatened
PE = Proposed for listing as Endangered
PT = Proposed for listing as Threatened
CSC = California Species of Special Concern
FP = California Fully Protected
SC = NMFS Species of Concern
D = Delisted
PD = Proposed for Delisting
***** = Non-native Species

Appendix F

Mitigation Monitoring and Reporting Program

Appendix F - Mitigation Monitoring and Reporting Program

F.1 Introduction

In accordance with the National Environmental Policy Act (NEPA) (42 U.S.C. 4331 et seq.), the California Environmental Quality Act (CEQA) (Public Resources Code Section 21000 et seq.) and the State CEQA Guidelines (14 California Code of Regulations [CCR] Section 15000 et seq.), the U.S. Fish and Wildlife Service (USFWS) in conjunction with the Deer Creek Irrigation District (DCID) prepared a joint Environmental Assessment / Initial Study (EA / IS) that identifies potential significant environmental impacts related to a fish passage improvement project on Deer Creek, at approximately 11 river miles upstream of the confluence with the Sacramento River, east of Vina, Tehama County, California. The objective of the project is to improve upstream and downstream passage at the diversion dam for adult and juvenile salmonids and Pacific lamprey while meeting DCID's irrigation needs. The EA / IS also identifies mitigation measures that would reduce these impacts to a less-than-significant level. CEQA Guidelines require public agencies "to adopt a reporting and monitoring program for changes to the project which it has adopted or made a condition of project approval in order to mitigate or avoid significant effects on the environment." A Mitigation Monitoring and Reporting Program (MMRP) is required for the proposed project because the EA / IS identifies potentially significant adverse impacts related to project implementation, and mitigation measures have been identified to reduce those impacts. Adoption of the MMRP occurs along with approval of the proposed project.

F.2 Purpose of Mitigation Monitoring and Reporting Program

This MMRP has been prepared in order to ensure mitigation measure implementation. Measures will occur before, during and / or after project construction and operation. The MMRP may be modified during project implementation, as necessary, in response to changing conditions or other refinements. Table F-1 will assist the responsible parties with measure implementation. The table identifies individual mitigation measures, timing of implementation, responsible parties for implementing the measure, and space to confirm compliance of the mitigation measures. The listing sequence of mitigation measures follows the sequence found in the EA / IS.

F.3 Roles and Responsibilities

Unless otherwise specified, Trout Unlimited is responsible for mitigation measure implementation and demonstrating their successfully completion. Trout Unlimited, at its discretion, may delegate implementation responsibility or portions thereof to a licensed contractor or other designated agent. Trout Unlimited is responsible for overall MMRP administration and verifying completion. Trout Unlimited will designate a project manager to oversee implementation of the MMRP.

F.4 Mitigation Monitoring and Reporting Plan Table

The categories identified in Table G-1 are described below.

- Measure Number – The listing sequence of mitigation measures follows the sequence found in the EA / IS.
- Mitigation Measure – Provides mitigation measure text identified in the EA / IS.
- Timing of Implementation – The time frame in which the mitigation will take place.
- Responsible Parties – The party responsible for enforcing the mitigation measure requirements. If more than one party has responsibility under a given mitigation measure, the tasks of each individual party is identified parenthetically (e.g., "implementation" or "monitoring").
- Verification of Compliance – This column is to be dated and signed by the person (either project manager or designee) responsible for verifying compliance with the requirements of the mitigation measure.

Table F-1. Mitigation Monitoring and Reporting Program Summary					
Measure Number	**Mitigation Measure**	**Timing of Implementation**	**Responsible Parties**	**Verification of Completion**	
				Initials	**Date**
3.3 Air Quality					
AIR-1:	Fugitive Dust Permits will be obtained from the Tehama County Air Pollution Control District (TCAPCD).	Pre-construction	Trout Unlimited		
AIR-2:	All construction equipment will be maintained in proper tune according to manufacturer's specifications.	Throughout Construction	Trout Unlimited		
	To the extent feasible, the use of diesel construction equipment meeting the California Air Resources Board's (CARB) 1996 or newer certification standard for off-road heavy-duty diesel engines will be maximized.	Throughout Construction	Trout Unlimited		
	If required by the TCAPCD, verify that owners or operators of vehicles are registered with the CARB Diesel Off-Road On-Line Reporting System (DOORS) program:	Pre-construction	Trout Unlimited		
	If required by the TCAPCD, verify that owners or operators of portable engines and certain other types of equipment are registered under the CARB's Statewide Portable Equipment Registration Program (PERP) in order to operate their equipment throughout California without having to obtain individual permits from local air districts:	Pre-construction	Trout Unlimited		
3.4 Biological Resources					
VEGETATION-1:	Disturbance to existing vegetation will be avoided or minimized to the extent possible.	Throughout Construction	Trout Unlimited		
VEGETATION-2:	Disturbance to riparian vegetation will be avoided or minimized to the extent possible.	Throughout Construction	Trout Unlimited		
VEGETATION-3:	A revegetation plan will be prepared in coordination with the landowners to replace impacted riparian wetlands and other woody vegetation by a measure of quantity and quality equal to, or exceeding impacts of the project using appropriate native plant species.	Post-construction	Trout Unlimited		
VEGETATION-4:	All heavy equipment shall be thoroughly cleaned prior to mobilization onsite to remove any soil, weed seeds and plant parts in order to reduce the importation and spread of invasive exotic plant species.	Pre-construction and Throughout Construction	Trout Unlimited		
VEGETATION-5:	Only certified weed-free straw shall be used for erosion control or other purposes to reduce the importation and spread of invasive exotic plant species.	Throughout Construction	Trout Unlimited		
VEGETATION-6:	Road improvement and grading activities shall be conducted in such a manner that disturbances are confined to the already disturbed road prism.	Pre-construction and Throughout Construction	Trout Unlimited		
VEGETATION-7:	Vehicle traffic will be limited to the existing disturbed road prism. The condition of the road post-project will be coordinated with the landowners and all measures will be taken to return the road to pre-project conditions. Truck passing and parking areas will be established in areas away from Tehama navarretia, Bidwell's knotweed and hogwallow starfish populations and seasonal wetlands. Truck passing areas will be clearly mapped in the field with high visibility fencing or flagging and all construction personnel will be made aware of the sensitive resources and avoidance measures.	Pre-construction, Throughout Construction, Post-construction	Trout Unlimited		
VEGETATION-8:	An appropriately-timed preconstruction rare plant survey will be conducted prior to the construction of the two new road segment realignments to ensure that nothing was missed during the winter 2018 rare plant survey.	Pre-construction	Trout Unlimited		
VEGETATION-9:	Disturbance associated with the two new road segment realignments shall be restricted to the degree possible to the new road prism. To the extent possible, truck passing and parking areas associated with the new road prism will be established in areas away from Tehama navarretia and hogwallow starfish populations.	Pre-construction and Throughout Construction	Trout Unlimited		
VEGETATION-10:	No smoking will be allowed on the construction site or within the project area, for fire prevention purposes.	Throughout Construction	Trout Unlimited		
VEGETATION-11:	No road improvements shall occur within the 0.6-mile reach of the south access road within the sub-watershed of the large vernal pool / Hoover's Spurge population.	Throughout Construction	Trout Unlimited		
	Signage in both directions and flagging shall be used to clearly indicate the sensitive habitat area bordering the eastern side of the road. All drivers and machinery operators will be made aware of the sensitive resource area and will confine all vehicle / machinery travel to the existing road surface.	Pre-construction and Throughout Construction	Trout Unlimited		
FISH-1:	Instream work can occur between July 1st and September 30th. Instream work could start sooner if the California Department of Fish and Wildlife (CDFW) determines that the adult CV spring-run Chinook salmon are no longer present based on environmental conditions and real time passage data. Instream work could be extended October 14th, if environmental conditions which would preclude juvenile steelhead and spring-run Chinook salmon emigration or adult steelhead and late-fall-run Chinook salmon immigration are expected to persist. Instream work outside of the July 1st to September 30th work window must be approved by CDFW and the National Marine Fisheries Service (NMFS) on a case-by-case basis with details on how take will be avoided and / or minimized.	Throughout Construction	Trout Unlimited		
FISH-2:	All construction debris (concrete, metal, etc.) from the fish passage improvement-related construction activities shall be removed from the active stream channel post-construction.	Post-construction	Trout Unlimited		

FISH-3:	Immediately prior to installation of temporary dam structures, a qualified fish biologist, in coordination with CDFW, will conduct snorkel surveys above and below the dam and diversion, to identify presence of salmonids. The U.S. Fish and Wildlife Service (USFWS), in coordination with the contractor, and in consultation with NMFS and CDFW, will ensure that qualified fish biologists are onsite to implement fish rescue operations within the dewatered area through the use of herding, seining and / or electrofishing, if necessary. Best professional determination will be used to decide which method(s) of rescue is to be used and where the relocation of captured fish, either upstream or downstream of the temporary dams is to occur. Biologists will first try to haze and herd fish out of the fish exclusion area. If fish biologists determine that the use of electrofishing is necessary for the efficient and successful removal of fish, NMFS electrofishing guidelines (National Marine Fisheries Service 2000) will be strictly followed. The fish rescue team will be comprised of fishery biologists with professional experience using seines and electrofishing equipment. The same methodologies will be used during dewatering of the diversion ditch.	Pre-construction and Throughout Construction	Trout Unlimited		
FISH-4:	For the duration of the project, all diverted water must be screened through the existing screens, which currently do not meet CDFW and NMFS criteria, however best professional judgement will be used to prevent harm to juvenile fish through frequent monitoring and site specific modifications as needed. Furthermore, all water returned to the stream will comply with NMFS bypass return criteria, including consideration of the location of the bypass pipe exit (i.e. bypassed water will enter the watercourse and will not be of an excessive height, or empty onto rocks, etc.) for the duration of the bypass period.	Throughout Construction	Trout Unlimited		
FISH-5:	All Reasonable and Prudent Measures and Terms and Conditions found in the Programmatic Biological Opinion issued by NMFS for the project (National Marine Fisheries Service 2016) will be adhered to.	Throughout Construction	Trout Unlimited		
FISH-6:	All dewatering and re-watering activities will be conducted slowly, in order to minimize disturbance to fish. A qualified fisheries biologist will be onsite during these activities, and CDFW will be notified prior to these activities.	Throughout Construction	Trout Unlimited		
FISH-7:	All water pumps used during construction shall be screened to meet CDFW and NMFS criteria, unless deemed unnecessary by CDFW and NMFS (i.e. if water was being diverted from an off-channel pool). The refueling of pumps will occur away from the wetted area / channel. If pumps are using fuel, they will be outfitted with a spill kit.	Throughout Construction	Trout Unlimited		
FISH-8:	Adequate erosion and pollution control measures shall be taken to ensure that sediment, turbidity, petroleum products or other harmful chemicals do not enter Deer Creek as a result of construction activities. Standard Best Management Practices (BMPs) shall be incorporated into the project designs.	Throughout Construction and Post-construction	Trout Unlimited		
FISH-9:	BMPs will be developed and implemented to ensure that wet concrete does not enter Deer Creek, wetlands or other aquatic sites during construction.	Throughout Construction	Trout Unlimited		
FISH-10:	All reasonable measures will be taken to minimize impacts to lamprey, including spending more time at the area as it becomes dewatered (and they are moving out of the mud, chasing the water as it recedes), and possibly electroshocking.	Throughout Construction	Trout Unlimited		
FISH-11:	Appropriate measures will be used to avoid the spread of aquatic invasive species such as zebra / quagga mussels, New Zealand mudsnails and chytrid fungus to and from the project area according to the current CDFW Aquatic Invasive Species Disinfection / Decontamination Protocols (Northern Region) and the current USFWS Red Bluff Fish and Wildlife Office Anadromous Fish Restoration Program Hazard Analysis Critical Control Point Plan.	Pre-construction, Throughout Construction, Post-construction	Trout Unlimited		
WILDLIFE-1:	Within ten (10) calendar prior to the onset of potentially disturbing construction activities, areas that will be disturbed within 100 feet of water bodies shall be surveyed by a qualified biologist to determine if any western pond turtles or turtle nests are present. If any turtles or turtle nests are found, a qualified and permitted biologist shall determine and implement appropriate relocation procedures, in coordination with CDFW. The site shall be checked daily by trained construction workers prior to work commencing, including underneath vehicles and equipment that will be used. If turtles are found, they will be moved by a qualified and permitted biologist to an area of safety out of harm's way.	Pre-construction	Trout Unlimited		
WILDLIFE-2:	Within ten (10) calendar days prior to work in aquatic habitats, water bodies shall be surveyed by a qualified biologist to determine if any foothill yellow-legged frogs are present. If any foothill yellow-legged frogs are found, a qualified and permitted biologist shall determine and implement appropriate relocation procedures, in coordination with CDFW. The site shall be checked daily by trained construction workers prior to work commencing, including underneath vehicles and equipment that will be used. If foothill yellow-legged frogs are found, they will be moved by a qualified and permitted biologist to an area of safety out of harm's way.	Pre-construction	Trout Unlimited		

	Any tree removal, vegetation clearing, or the onset of potentially disturbing construction activities shall occur between September 1 and January 1 (outside of the nesting season for raptors with potential to occur within, or in the vicinity of the project site). Note: Also see measure WILDLIFE-4.	Throughout Construction	Trout Unlimited		
WILDLIFE-3:	If tree removal, vegetation clearing, or the onset of potentially disturbing construction activities must occur during the nesting season, a raptor nesting survey of the construction area and adjacent suitable habitat shall be conducted by a qualified biologist no more than seven (7) days prior to the initiation of the onset of these activities or as appropriate survey protocols require. If active raptor nests are found to be present, tree removal, vegetation clearing and the onset of potentially disturbing construction activities shall be suspended until a qualified biologist, in consultation with CDFW and / or USFWS can establish an appropriate protective buffer area to minimize impacts to the nesting raptors. No construction activities shall commence within the buffer area until the qualified biologist determines that the young birds have fledged or the nest is no longer active.	Pre-construction	Trout Unlimited		
	Construction activities shall occur continuously (not including weekends) until the end of the nesting season to discourage raptors from initiating nesting. If construction activities cease for more than seven (7) consecutive days (including weekends), all construction activities shall cease until CDFW can be consulted to determine if a subsequent raptor nesting survey must be performed.	Throughout Construction	Trout Unlimited		
	Active or inactive nests are not to be disturbed or removed as a result of construction activities without DCFW consultation per Fish and Game Code Section 3503.5.	Throughout Construction	Trout Unlimited		
	Any tree removal, vegetation clearing, or the onset of potentially disturbing construction activities shall occur between August 1 and March 1 (outside of the nesting season for grasshopper sparrow, yellow-breasted chat, loggerhead shrike, yellow warbler and other nesting migratory birds). Note: Also see measure WILDLIFE-3.	Throughout Construction	Trout Unlimited		
WILDLIFE-4:	If tree removal, vegetation clearing, or the onset of potentially disturbing construction activities must occur during the nesting season, a nesting survey of the construction area and adjacent suitable habitat shall be conducted by a qualified biologist no more than seven (7) days prior to the initiation of the onset of these activities. If active bird nests are found to be present, tree removal, vegetation clearing and the onset of potentially disturbing construction activities shall be suspended until a qualified biologist, in consultation with CDFW, can establish an appropriate protective buffer area to minimize impacts to the nesting birds. No construction activities shall commence within the buffer area until the qualified biologist determines that the young birds have fledged or the nest is no longer active.	Pre-construction	Trout Unlimited		
	Construction activities shall occur continuously (not including weekends) until the end of the nesting season to discourage avian species from initiating nesting. If construction activities cease for more than seven (7) consecutive days (including weekends), all construction activities shall cease until CDFW can be consulted to determine if a subsequent nesting bird survey must be performed.	Throughout Construction	Trout Unlimited		
	Active nests are not to be disturbed or removed as a result of construction activities per Fish and Game Code Section 3503.	Throughout Construction	Trout Unlimited		
WILDLIFE-5:	Prior to the onset of potentially disturbing construction activities, a Swainson's hawk nesting survey of the construction area and adjacent suitable habitat shall be conducted by a qualified biologist in accordance with the protocols in Recommended Timing and Methodology for Swainson's Hawk Nesting Surveys in California's Central Valley (Swainson's Hawk Technical Advisory Committee 2000). If active Swainson's hawk nests are found to be present, the onset of potentially disturbing construction activities shall be suspended until a qualified biologist, in consultation with CDFW, can establish an appropriate protective buffer area to minimize impacts to the nesting birds. No construction activities shall commence within the buffer area until the qualified biologist determines that the nest is no longer active.	Pre-construction	Trout Unlimited		
WILDLIFE-6:	Within seven (7) calendar days prior to the onset of potentially disturbing construction activities, a burrowing owl nesting / roosting survey of the construction area and adjacent suitable habitat shall be conducted by a qualified biologist. If active burrowing owl burrows are found to be present, the onset of potentially disturbing construction activities shall be suspended until a qualified biologist, in consultation with CDFW, can establish an appropriate protective buffer area to minimize impacts to the nesting / roosting birds. No construction activities shall commence within the buffer area until the qualified biologist determines that the burrow is no longer active.	Pre-construction	Trout Unlimited		

WILDLIFE-7:	Prior to any vegetation removal, a survey of the vegetation to be removed shall be conducted by a qualified biologist to ensure that pallid bats are not roosting in the area to be removed.	Pre-construction	Trout Unlimited		
	If pallid bats are found to be roosting within the vegetation to be removed, these activities shall be suspended until a qualified biologist, in consultation with CDFW, can establish appropriate measures to minimize impacts to this species. Examples of measures would include tree removal over several days, removal at night after bats have emerged, delayed removal until after the maternity season, etc.	Pre-construction	Trout Unlimited		
WILDLIFE-8:	All vegetation clearing within potential western red bat roosting habitat (woody riparian habitat with mature trees) shall occur between August 31 and May 1, in order to minimize the likelihood of injuring or killing juvenile bats during the period when they are still unable to fly.	Throughout Construction	Trout Unlimited		
	As it relates to bats only, tree removal may occur prior to August 31 based upon a site-specific tree removal plan approved by CDFW. The plan shall consider or include the following: Monitoring of the affected trees shall be conducted using bat detection equipment within five (5) calendar days of tree removal. If red bats are not present, tree removal can proceed. If red bats are present, a survey on the night prior to tree removal may help confirm the use of that tree by red bats. If red bats are potentially using the tree, a qualified biologist shall monitor removal / trimming of trees that provide suitable red bat roosting habitat. Prior to tree removal / trimming, each tree shall be shaken gently, and several minutes shall pass before felling trees or limbs to allow red bats time to arouse and leave the tree. The biologist shall search downed vegetation for dead or injured red bats and report any dead or injured special-status bat species to CDFW. All bat observations should be reported to CDFW.	Throughout Construction	Trout Unlimited		
WILDLIFE-9:	Prior to construction, a qualified biologist will inspect the project site for signs of denning by ringtails.	Pre-construction	Trout Unlimited		
	If ringtails are found to be denning, construction activities will be suspended until a qualified biologist, in consultation with CDFW, can establish appropriate measures to protect ringtail.	Pre-construction	Trout Unlimited		
WILDLIFE-10:	The USFWS shall be consulted to 1) develop appropriate avoidance and minimization measures, and 2) determine whether an Endangered Species Act Section 7 take permit will be required for the project. All protective measures imposed by USFWS through the consultation shall be adhered to.	Pre-construction and Throughout Construction	Trout Unlimited		
WILDLIFE-11:	To reduce potential impacts to the valley elderberry longhorn beetle (VELB) to less than significant levels, the proposed project shall comply with the current USFWS Framework for Assessing Impacts to the Valley Elderberry Longhorn Beetle (Desmocerus californicus dimorphus) (U.S. Fish and Wildlife Service 2017).	Throughout Construction	Trout Unlimited		
WILDLIFE-12:	Prior to construction, all elderberry shrubs to be avoided within 150 feet of any project activity will be clearly flagged, marked and maintained throughout construction in order to avoid impacts to the valley elderberry longhorn beetle. All elderberry shrubs to be avoided within 100 feet of project activity will be marked with high-visibility orange fencing.	Pre-construction	Trout Unlimited		
WILDLIFE-13:	Project activities shall avoid direct impacts to seasonal wetlands or other potential large branchiopod (fairy shrimp, tadpole shrimp) habitats, to the extent possible.	Throughout Construction	Trout Unlimited		
	High-visibility fencing shall be installed in areas where equipment will be working near any potential large branchiopod habitat that is not to be disturbed.	Pre-construction	Trout Unlimited		
	No road grading or road improvements shall be allowed in or, where feasible, near potential large branchiopod habitat that is not to be disturbed.	Throughout Construction	Trout Unlimited		
	All transporters of potentially hazardous materials (fuel, oil, cement, etc.) will be notified as to the presence of potential large branchiopod habitats, and be required to inspect their vehicles prior to entry and exit of the project site to prevent accidental discharge.	Pre-construction and Throughout Construction	Trout Unlimited		
	All vehicular traffic will be restricted to stay within the designated work boundaries. The work boundaries will be flagged or fenced and identified on construction drawings to limit equipment and personnel to the minimum area necessary to perform the project work and minimize impacts to potential large branchiopod habitat.	Throughout Construction	Trout Unlimited		
WILDLIFE-14:	For potential large branchiopod habitat that cannot be avoided within the existing roads, a layer of geotextile material will be placed across the entire pool bottom up to the edge of the depression. 0.5- to 2-inch diameter gravel or rock will be used to fill the basin up to a level surface with the surrounding road elevation. Gravel / rock fill will be placed prior to the onset of construction and will be maintained throughout the project. After construction is completed, the gravel / rock and geotextile material shall be removed and the pool will be left in pre-project conditions.	Pre-construction, Throughout Construction, Post-construction	Trout Unlimited		

WILDLIFE-15:	A qualified biologist (biological monitor) shall regularly inspect construction-related activities to ensure that no unnecessary disturbance to special-status species and / or their associated habitats occurs. The biological monitor shall have the authority to stop all activities that may result in such disturbance until appropriate corrective measures have been completed. The biologist will also be required to report any unauthorized take to CDFW, USFWS and / or NMFS immediately.	Throughout Construction	Trout Unlimited		
WILDLIFE-16:	Prior to the onset of construction activities, a construction worker education program shall be implemented that includes an explanation of all special-status animal species, identification, avoidance measures, and federal and state laws that protect the species. This shall include, at a minimum, those species listed in the environmental documents.	Pre-construction and Throughout Construction	Trout Unlimited		
WILDLIFE-17:	All food-related trash will be disposed of in closed containers and removed from the project area daily during the construction period. Construction personnel will not feed or otherwise attract wildlife to the project area.	Throughout Construction	Trout Unlimited		
WILDLIFE-18:	No pets will be allowed within the project area.	Throughout Construction	Trout Unlimited		
WETLAND-1:	Project activities will avoid impacts to wetlands and other aquatic habitats to the extent possible.	Throughout Construction	Trout Unlimited		
WETLAND-2:	High-visibility fencing will be installed in areas where equipment will be working near any wetlands or other aquatic habitats that are not to be disturbed.	Pre-construction	Trout Unlimited		
WETLAND-3:	Construction crews will be informed about the importance of avoiding sensitive areas, including wetlands.	Pre-construction	Trout Unlimited		
WETLAND-4:	A Clean Water Act Section 404 Permit will be obtained from the U.S. Army Corps of Engineers and a Clean Water Act Section 401 Certification will be obtained from the Central Valley Regional Water Quality Control Board (RWQCB).	Pre-construction	Trout Unlimited		
WETLAND-5:	A California Fish and Game Code Section 1600 Lake or Streambed Alteration Agreement will be obtained from CDFW.	Pre-construction	Trout Unlimited		
3.5 Cultural Resouces					
CULTURAL-1:	The 400 foot section of access road passing within 100 feet of DCID Site #3 shall be considered environmentally sensitive and any use or modification of the access road in this area (e.g., placement of fill materials) shall be confined to the approximate footprint of the existing roadbed.	Throughout Construction	Trout Unlimited		
CULTURAL-2:	Prior to the onset of construction, two new permanent DCID south access by-pass routes shall be constructed and used for all project activities to completely avoid impacts to DCID Site # 1 and DCID Site #2.	Pre-construction	Trout Unlimited		
CULTURAL-3:	At DCID North #1, where avoidance is not feasible, composite environmental matting shall be in place for the duration of Project construction in accordance with the methods outlined in White and Reifschneider-Smith (2018). The composite matting shall be composed of a basal layer of landscaping fabric, capped by a minimum 4 inch thick bed of wood chips, in turn capped by environmental matting. The composite matting shall cover any portion of impacted archaeological deposits and a 10-foot buffer on all sides. The integrity of the matting shall be checked on a daily basis and maintained as necessary to protect the site for the duration of Project construction.	Pre-construction and Throughout Construction	Trout Unlimited		
	Equipment and vehicle traffic shall be confined to the matting in the vicinity of DCID North #1.	Throughout Construction	Trout Unlimited		
	Prior to installation of the basal fabric, boulders scraped onto the site surface during the original DCID North Access construction shall be hand removed and the tree, used as a fence corner-post at the south edge of the locus shall be flush cut.	Pre-construction	Trout Unlimited		
CULTURAL-4:	In the event subsurface archaeological resources are encountered during ground-disturbing activities, all work will cease at the general area of discovery and the USFWS regional archaeologist, or other lead agency archaeologist, will be notified immediately. A field exam by a professional archaeologist may be required and further steps for resource protection will be implemented, including mitigation and consultation with the Native American Indian community if human remains are encountered (following Native American Graves Protection and Repatriation Act procedures). Work may proceed on other parts of the project site while mitigation for historical, unique archaeological or tribal resources is being carried out.	Throughout Construction	Trout Unlimited		
3.8 Hazards and Hazardous Wastes					
HAZ-1:	A designated concrete washout area will be located at least 100 feet from any high water mark within adjacent waterways, and from any wetlands and will be developed and used following the U.S. EPA Stormwater BMP for a Concrete Washout.	Throughout Construction	Trout Unlimited		
HAZ-2:	BMPs will be developed and implemented to ensure that wet concrete does not enter Deer Creek or other aquatic sites during construction.	Pre-construction and Throughout Construction	Trout Unlimited		
HAZ-3:	Measures WATER-3 through WATER-6 associated with potential petroleum product spills will be fully implemented.	Throughout Construction	Trout Unlimited		
HAZ-4:	Construction equipment and materials shall not be stored or stockpiled in the creek channel, and shall be stored at least 50 feet from the top of the stream bank, any wetlands or other aquatic sites.	Throughout Construction	Trout Unlimited		

3.9 Hydrology and Water Quality					
WATER-1:	All construction shall be conducted in the summer / early fall during the low flow period. Any work within the channel and banks, outside of this instream work window must be isolated from flowing water and dewatering will be required.	Throughout Construction	Trout Unlimited		
WATER-2:	Monitoring of water turbidity and settleable materials shall be conducted in accordance with the Clean Water Act Section 401 Certification through consultation with the RWQCB.	Throughout Construction	Trout Unlimited		
WATER-3:	All equipment and machinery that contains fuel, oil or other petroleum products used during construction-related activities shall be checked for petroleum leaks immediately prior to being mobilized to the project site, and again each day prior to use.	Pre-construction and Throughout Construction	Trout Unlimited		
WATER-4:	All equipment refueling and / or maintenance shall take place within a secondary containment structure and a minimum of 100 feet away from Deer Creek, any wetlands or other aquatic sites.	Throughout Construction	Trout Unlimited		
WATER-5:	An emergency spill kit and absorbent oil booms will be onsite during construction activities.	Throughout Construction	Trout Unlimited		
WATER-6:	All equipment operations within the channel and banks of Deer Creek will be required to use readily biodegradable hydraulic oil.	Throughout Construction	Trout Unlimited		
WATER-7:	A dewatering permit will be obtained from the RWQCB, if deemed necessary based on the dewatering methods used.	Pre-construction	Trout Unlimited		
3.15 Soils / Geology / Minerals					
SOIL / GEO / MIN-1:	After ground-disturbing activities are complete, all disturbed areas (outside of the active stream channel) shall be seeded with native plant species and / or mulched as described in the revegetation plan and the Stormwater Pollution Prevention Plan (SWPPP), if required.	Post-construction	Trout Unlimited		
SOIL / GEO / MIN -2:	Construction of all project actions shall comply with RWQCB Basin Plan Objectives. Standard BMPs will be incorporated into the project designs and / or the SWPPP, if required.	Throughout Construction	Trout Unlimited		
SOIL / GEO / MIN -3:	If the total disturbance area is greater than one acre, a Notice of Intent will be submitted to the State Water Resources Control Board to obtain coverage under the National Pollution Discharge Elimination System General Permit for Discharges of Stormwater Associated with Construction Activity.	Pre-construction	Trout Unlimited		

Appendix G

CEQA Environmental Checklist Form

ENVIRONMENTAL FACTORS POTENTIALLY AFFECTED:

The environmental factors checked below would be potentially affected by this project, involving at least one impact that is a “Less Than Significant with Mitigation Incorporated” or “Less Than Significant” as indicated by the checklist on the following pages. Each of the environmental topics listed have been discussed in the joint Environmental Assessment and Initial Study.

☐ Aesthetics	☐ Agriculture and Forestry Resources	☑ Air Quality
☑ Biological Resources	☑ Cultural & Tribal Cultural Resources	☐ Greenhouse Gas Emissions
☑ Hazards & Hazardous Materials	☑ Hydrology / Water Quality	☐ Land Use / Planning
☐ Noise	☐ Population / Housing	☐ Public Services / Utilities
☐ Recreation	☑ Soils Geology Minerals	☐ Transportation/Traffic
☐ Mandatory Findings of Significance		

DETERMINATION: (To be completed by the Lead Agency)

On the basis of this initial evaluation:

☐ I find that the proposed project COULD NOT have a significant effect on the environment, and a NEGATIVE DECLARATION will be prepared.

☑ I find that although the proposed project could have a significant effect on the environment, there will not be a significant effect in this case because revisions in the project have been made by or agreed to by the project proponent. A MITIGATED NEGATIVE DECLARATION will be prepared.

☐ I find that the proposed project MAY have a significant effect on the environment, and an ENVIRONMENTAL IMPACT REPORT is required.

☐ I find that the proposed project MAY have a “potentially significant impact” or “potentially significant unless mitigated” impact on the environment, but at least one effect 1) has been adequately analyzed in an earlier document pursuant to applicable legal standards, and 2) has been addressed by mitigation measures based on the earlier analysis as described on attached sheets. An ENVIRONMENTAL IMPACT REPORT is required, but it must analyze only the effects that remain to be addressed.

☐ I find that although the proposed project could have a significant effect on the environment, because all potentially significant effects (a) have been analyzed adequately in an earlier EIR or NEGATIVE DECLARATION pursuant to applicable standards, and (b) have been avoided or mitigated pursuant to that earlier EIR or NEGATIVE DECLARATION, including revisions or mitigation measures that are imposed upon the proposed project, nothing further is required.

Signature

4/18/2019
Date

Environmental Checklist Form

	Potentially Significant Impact	Less Than Significant with Mitigation Incorporated	Less Than Significant Impact	No Impact
I. AESTHETICS. Would the project:				
a) Have a substantial adverse effect on a scenic vista?	☐	☐	☐	☑
b) Substantially damage scenic resources, including, but not limited to, trees, rock outcroppings, and historic buildings within a state scenic highway?	☐	☐	☐	☑
c) Substantially degrade the existing visual character or quality of the site and its surroundings?	☐	☐	☑	☐
d) Create a new source of substantial light or glare which would adversely affect day or nighttime views in the area?	☐	☐	☐	☑
II. AGRICULTURE AND FORESTRY RESOURCES. In determining whether impacts to agricultural resources are significant environmental effects, lead agencies may refer to the California Agricultural Land Evaluation and Site Assessment Model (1997) prepared by the California Dept. of Conservation as an optional model to use in assessing impacts on agriculture and farmland. In determining whether impacts to forest resources, including timberland, are significant environmental effects, lead agencies may refer to information compiled by the California Department of Forestry and Fire Protection regarding the state's inventory of forest land, including the Forest and Range Assessment Project and the Forest Legacy Assessment project; and forest carbon measurement methodology provided in Forest Protocols adopted by the California Air Resources Board. Would the project:				
a) Convert Prime Farmland, Unique Farmland, or Farmland of Statewide Importance (Farmland), as shown on the maps prepared pursuant to the Farmland Mapping and Monitoring Program of the California Resources Agency, to non-agricultural use?	☐	☐	☐	☑
b) Conflict with existing zoning for agricultural use, or a Williamson Act contract?	☐	☐	☐	☑
c) Conflict with existing zoning for, or cause rezoning of, forest land (as defined in Public Resources Code section 12220(g)), timberland (as defined by Public Resources Code section 4526), or timberland zoned Timberland Production (as defined by Government Code section 51104(g))?	☐	☐	☐	☑
d) Result in the loss of forest land or conversion of forest land to non-forest use?	☐	☐	☐	☑
e) Involve other changes in the existing environment which, due to their location or nature, could result in conversion of Farmland, to non-agricultural use or conversion of forest land to non-forest use?	☐	☐	☐	☑
III. AIR QUALITY. Where available, the significance criteria established by the applicable air quality management or air pollution control district may be relied upon to make the following determinations. Would the project:				
a) Conflict with or obstruct implementation of the applicable air quality plan?	☐	☐	☐	☑
b) Violate any air quality standard or contribute substantially to an existing or projected air quality violation?	☐	☐	☑	☐

Environmental Checklist Form

	Potentially Significant Impact	Less Than Significant with Mitigation Incorporated	Less Than Significant Impact	No Impact
c) Result in a cumulatively considerable net increase of any criteria pollutant for which the project region is non-attainment under an applicable federal or state ambient air quality standard (including releasing emissions which exceed quantitative thresholds for ozone precursors)?	☐	☑	☐	☐
d) Expose sensitive receptors to substantial pollutant concentrations?	☐	☐	☐	☑
e) Create objectionable odors affecting a substantial number of people?	☐	☐	☐	☑
IV. BIOLOGICAL RESOURCES. Would the project:				
a) Have a substantial adverse effect, either directly or through habitat modifications, on any species identified as a candidate, sensitive, or special status species in local or regional plans, policies, or regulations, or by the California Department of Fish and Game or U.S. Fish and Wildlife Service?	☐	☑	☐	☐
b) Have a substantial adverse effect on any riparian habitat or other sensitive natural community identified in local or regional plans, policies, regulations or by the California Department of Fish and Game or US Fish and Wildlife Service?	☐	☑	☐	☐
c) Have a substantial adverse effect on federally protected wetlands as defined by Section 404 of the Clean Water Act (including, but not limited to, marsh, vernal pool, coastal, etc.) through direct removal, filling, hydrological interruption, or other means?	☐	☑	☐	☐
d) Interfere substantially with the movement of any native resident or migratory fish or wildlife species or with established native resident or migratory wildlife corridors, or impede the use of native wildlife nursery sites?	☐	☐	☑	☐
e) Conflict with any local policies or ordinances protecting biological resources, such as a tree preservation policy or ordinance?	☐	☐	☐	☑
f) Conflict with the provisions of an adopted Habitat Conservation Plan, Natural Community Conservation Plan, or other approved local, regional, or state habitat conservation plan?	☐	☐	☐	☑
V. CULTURAL & TRIBAL RESOURCES. Would the project:				
a) Cause a substantial adverse change in the significance of a historical resource as defined in § 15064.5?	☐	☑	☐	☐
b) Cause a substantial adverse change in the significance of an archaeological resource pursuant to § 15064.5?	☐	☐	☐	☑
c) Directly or indirectly destroy a unique paleontological resource or site or unique geologic feature?	☐	☐	☐	☑
d) Disturb any human remains, including those interred outside of dedicated cemeteries?	☐	☐	☐	☑
e) Would the project cause a substantial adverse change in the significance of a tribal cultural resource, defined in Public Resources Code section 21074 as either a site, feature, place, cultural landscape that is geographically defined in terms of the size and scope of the landscape, sacred place, or object with cultural value to a California Native American tribe, and that is:				

Environmental Checklist Form

	Potentially Significant Impact	Less Than Significant with Mitigation Incorporated	Less Than Significant Impact	No Impact
i) Listed or eligible for listing in the California Register of Historical Resources, or in a local register of historical resources as defined in Public Resources Code section 5020.1(k), or	☐	☐	☐	☑
ii) A resource determined by the lead agency, in its discretion and supported by substantial evidence, to be significant pursuant to criteria set forth in subdivision (c) of Public Resources Code Section 5024.1. In applying the criteria set forth in subdivision (c) of Public Resource Code Section 5024.1, the lead agency shall consider the significance of the resource to a California Native American tribe.	☐	☐	☐	☑
VI. GREENHOUSE GAS EMISSIONS. Would the project:				
a) Generate greenhouse gas emissions, either directly or indirectly, that may have a significant impact on the environment?	☐	☐	☑	☐
b) Conflict with an applicable plan, policy or regulation adopted for the purpose of reducing the emissions of greenhouse gases?	☐	☐	☐	☑
VII. HAZARDS AND HAZARDOUS MATERIALS. Would the project:				
a) Create a significant hazard to the public or the environment through the routine transport, use, or disposal of hazardous materials?	☐	☐	☐	☑
b) Create a significant hazard to the public or the environment through reasonably foreseeable upset and accident conditions involving the release of hazardous materials into the environment?	☐	☑	☐	☐
c) Emit hazardous emissions or handle hazardous or acutely hazardous materials, substances, or waste within one-quarter mile of an existing or proposed school?	☐	☐	☐	☑
d) Be located on a site which is included on a list of hazardous materials sites compiled pursuant to Government Code Section 65962.5 and, as a result, would it create a significant hazard to the public or the environment?	☐	☐	☐	☑
e) For a project located within an airport land use plan or, where such a plan has not been adopted, within two miles of a public airport or public use airport, would the project result in a safety hazard for people residing or working in the project area?	☐	☐	☐	☑
f) For a project within the vicinity of a private airstrip, would the project result in a safety hazard for people residing or working in the project area?	☐	☐	☐	☑
g) Impair implementation of or physically interfere with an adopted emergency response plan or emergency evacuation plan?	☐	☐	☐	☑
h) Expose people or structures to a significant risk of loss, injury or death involving wildland fires, including where wildlands are adjacent to urbanized areas or where residences are intermixed with wildlands?	☐	☐	☐	☑

Environmental Checklist Form

	Potentially Significant Impact	Less Than Significant with Mitigation Incorporated	Less Than Significant Impact	No Impact
VIII. HYDROLOGY / WATER QUALITY. Would the project:				
a) Violate any water quality standards or waste discharge requirements?	☐	☑	☐	☐
b) Substantially deplete groundwater supplies or interfere substantially with groundwater recharge such that there would be a net deficit in aquifer volume or a lowering of the local groundwater table level (e.g., the production rate of pre-existing nearby wells would drop to a level which would not support existing land uses or planned uses for which permits have been granted)?	☐	☐	☐	☑
c) Substantially alter the existing drainage pattern of the site or area, including through the alteration of the course of a stream or river, in a manner which would result in substantial erosion or siltation on- or off-site?	☐	☑	☐	☐
d) Substantially alter the existing drainage pattern of the site or area, including through the alteration of the course of a stream or river, or substantially increase the rate or amount of surface runoff in a manner which would result in flooding on- or off-site?	☐	☐	☐	☑
e) Create or contribute runoff water which would exceed the capacity of existing or planned stormwater drainage systems or provide substantial additional sources of polluted runoff?	☐	☐	☐	☑
f) Otherwise substantially degrade water quality?	☐	☑	☐	☐
g) Place housing within a 100-year flood hazard area as mapped on a federal Flood Hazard Boundary or Flood Insurance Rate Map or other flood hazard delineation map?	☐	☐	☐	☑
h) Place within a 100-year flood hazard area structures which would impede or redirect flood flows?	☐	☐	☑	☐
i) Expose people or structures to a significant risk of loss, injury or death involving flooding, including flooding as a result of the failure of a levee or dam?	☐	☐	☐	☑
j) Inundation by seiche, tsunami, or mudflow?	☐	☐	☐	☑
IX. LAND USE / PLANNING. Would the project:				
a) Physically divide an established community?	☐	☐	☐	☑
b) Conflict with any applicable land use plan, policy, or regulation of an agency with jurisdiction over the project (including, but not limited to the general plan, specific plan, local coastal program, or zoning ordinance) adopted for the purpose of avoiding or mitigating an environmental effect?	☐	☐	☐	☑
c) Conflict with any applicable habitat conservation plan or natural community conservation plan?	☐	☐	☐	☑
X. NOISE. Would the project result in:				
a) Exposure of persons to or generation of noise levels in excess of standards established in the local general plan or noise ordinance, or applicable standards of other agencies?	☐	☐	☑	☐

Environmental Checklist Form

	Potentially Significant Impact	Less Than Significant with Mitigation Incorporated	Less Than Significant Impact	No Impact
b) Exposure of persons to or generation of excessive groundborne vibration or groundborne noise levels?	☐	☐	☑	☐
c) A substantial permanent increase in ambient noise levels in the project vicinity above levels existing without the project?	☐	☐	☐	☑
d) A substantial temporary or periodic increase in ambient noise levels in the project vicinity above levels existing without the project?	☐	☐	☑	☐
e) For a project located within an airport land use plan or, where such a plan has not been adopted, within two miles of a public airport or public use airport, would the project expose people residing or working in the project area to excessive noise levels?	☐	☐	☐	☑
f) For a project within the vicinity of a private airstrip, would the project expose people residing or working in the project area to excessive noise levels?	☐	☐	☐	☑
XI. POPULATION / HOUSING. Would the project:				
a) Induce substantial population growth in an area, either directly (for example, by proposing new homes and businesses) or indirectly (for example, through extension of roads or other infrastructure)?	☐	☐	☐	☑
b) Displace substantial numbers of existing housing, necessitating the construction of replacement housing elsewhere?	☐	☐	☐	☑
c) Displace substantial numbers of people, necessitating the construction of replacement housing elsewhere?	☐	☐	☐	☑
XII. PUBLIC SERVICES / UTILITIES. Would the project:				
a) Result in substantial adverse physical impacts associated with the provision of new or physically altered governmental facilities, need for new or physically altered governmental facilities, the construction of which could cause significant environmental impacts, in order to maintain acceptable service ratios, response times or other performance objectives for any of the public services:				
Fire protection?	☐	☐	☐	☑
Police protection?	☐	☐	☐	☑
Schools?	☐	☐	☐	☑
Parks?	☐	☐	☐	☑
Other public facilities?	☐	☐	☐	☑
b) Exceed wastewater treatment requirements of the applicable Regional Water Quality Control Board?	☐	☐	☐	☑
c) Require or result in the construction of new water or wastewater treatment facilities or expansion of existing facilities, the construction of which could cause significant environmental effects?	☐	☐	☐	☑
d) Require or result in the construction of new storm water drainage facilities or expansion of existing facilities, the construction of which could cause significant environmental effects?	☐	☐	☐	☑

Environmental Checklist Form

	Potentially Significant Impact	Less Than Significant with Mitigation Incorporated	Less Than Significant Impact	No Impact
e) Have sufficient water supplies available to serve the project from existing entitlements and resources, or are new or expanded entitlements needed?	☐	☐	☐	☑
f) Result in a determination by the wastewater treatment provider which serves or may serve the project that it has adequate capacity to serve the project's projected demand in addition to the provider's existing commitments?	☐	☐	☐	☑
g) Be served by a landfill with sufficient permitted capacity to accommodate the project's solid waste disposal needs?	☐	☐	☐	☑
h) Comply with federal, state, and local statutes and regulations related to solid waste?	☐	☐	☐	☑
XIII. RECREATION.				
a) Would the project increase the use of existing neighborhood and regional parks or other recreational facilities such that substantial physical deterioration of the facility would occur or be accelerated?	☐	☐	☐	☑
b) Does the project include recreational facilities or require the construction or expansion of recreational facilities which might have an adverse physical effect on the environment?	☐	☐	☐	☑
XIV. SOILS / GEOLOGY / MINERALS. Would the project:				
a) Expose people or structures to potential substantial adverse effects, including the risk of loss, injury, or death involving:				
i) Rupture of a known earthquake fault, as delineated on the most recent Alquist-Priolo Earthquake Fault Zoning Map issued by the State Geologist for the area or based on other substantial evidence of a known fault? Refer to Division of Mines and Geology Special Publication 42.	☐	☐	☐	☑
ii) Strong seismic ground shaking?	☐	☐	☐	☑
iii) Seismic-related ground failure, including liquefaction?	☐	☐	☐	☑
iv) Landslides?	☐	☐	☐	☑
b) Result in substantial soil erosion or the loss of topsoil?	☐	☑	☐	☐
c) Be located on a geologic unit or soil that is unstable, or that would become unstable as a result of the project, and potentially result in on- or off-site landslide, lateral spreading, subsidence, liquefaction or collapse?	☐	☐	☐	☑
d) Be located on expansive soil, as defined in Table 18-1-B of the Uniform Building Code (1994), creating substantial risks to life or property?	☐	☐	☐	☑
e) Have soils incapable of adequately supporting the use of septic tanks or alternative waste water disposal systems where sewers are not available for the disposal of waste water?	☐	☐	☐	☑
f) Result in the loss of availability of a known mineral resource that would be of value to the region and the residents of the state?	☐	☐	☐	☑

Environmental Checklist Form

	Potentially Significant Impact	Less Than Significant with Mitigation Incorporated	Less Than Significant Impact	No Impact
g) Result in the loss of availability of a locally-important mineral resource recovery site delineated on a local general plan, specific plan or other land use plan?	☐	☐	☐	☑
XV. TRANSPORTATION / TRAFFIC. Would the project:				
a) Conflict with an applicable plan, ordinance or policy establishing measures of effectiveness for the performance of the circulation system, taking into account all modes of transportation including mass transit and non-motorized travel and relevant components of the circulation system, including but not limited to intersections, streets, highways and freeways, pedestrian and bicycle paths, and mass transit?	☐	☐	☐	☑
b) Conflict with an applicable congestion management program, including, but not limited to level of service standards and travel demand measures, or other standards established by the county congestion management agency for designated roads or highways?	☐	☐	☐	☑
c) Result in a change in air traffic patterns, including either an increase in traffic levels or a change in location that results in substantial safety risks?	☐	☐	☐	☑
d) Substantially increase hazards due to a design feature (e.g., sharp curves or dangerous intersections) or incompatible uses (e.g., farm equipment)?	☐	☐	☐	☑
e) Result in inadequate emergency access?	☐	☐	☐	☑
f) Conflict with adopted policies, plans, or programs regarding public transit, bicycle, or pedestrian facilities, or otherwise decrease the performance or safety of such facilities?	☐	☐	☐	☑
XVI. MANDATORY FINDINGS OF SIGNIFICANCE.				
a) Does the project have the potential to degrade the quality of the environment, substantially reduce the habitat of a fish or wildlife species, cause a fish or wildlife population to drop below self-sustaining levels, threaten to eliminate a plant or animal community, reduce the number or restrict the range of a rare or endangered plant or animal or eliminate important examples of the major periods of California history or prehistory?	☐	☐	☐	☑
b) Does the project have impacts that are individually limited, but cumulatively considerable? ("Cumulatively considerable" means that the incremental effects of a project are considerable when viewed in connection with the effects of past projects, the effects of other current projects, and the effects of probable future projects)?	☐	☐	☐	☑
c) Does the project have environmental effects which will cause substantial adverse effects on human beings, either directly or indirectly?	☐	☐	☐	☑

Appendix H

Greenhouse Gas Inventory

APPPENDIX H
Inventory and Calculation of Greenhouse Gas Emissions
Deer Creek DCID Dam Fish Passage Project

Line Emissions from Construction Equipment

Type of Equipment	Maximum Number per Day	Total Operation Days	Total Operation Hours[1]	Fuel Consumption Per Hour[2]	Total Fuel Consumption (gal. diesel)	CO_2e/gal diesel [3]	Total CO_2 Equivalent Emissions (metric tons)
Excavator	3	50	1200	17.56	21,072	0.010	219
Dozer	1	50	400	18.23	7,292	0.010	76
Front End Loader	2	50	800	23.43	18,744	0.010	195
Concrete Mixer Truck	7	5	280	4.86	1,361	0.010	14
Roller or grader	1	50	400	9.95	3,980	0.010	41
Dump Truck	17	21	2856	2.60	7,426	0.010	77
4" pump	1	50	400	4.29	1,716	0.010	18
water truck	1	50	400	4.86	1,944	0.010	20
TOTAL					63,534		660

[1] An 8-hour work day is assumed.

[2] California Air Resource Board Offroad 2007 Emissions Inventory fuel consumption factors

[3] World Resources Institute-Mobile combustion CO_2 emissions tool, June 2003 Version 1.2

Emissions from Transportation of Construction Workforce

Average Number of Workers per Day	Total Number of Workdays	Average Distance Travelled (round trip)	Total Miles Travelled	Average Passenger Vehicle Fuel Efficiency[4]	Total Fuel Consumption (gal. gasoline)	CO_2e/gal Gasoline [3]	Total CO_2 Equivalent Emissions (metric tons)
7.0	50	20	7000	20.8	336.5	0.009	3

[4] United States Environmental Protection Agency. 2008. Light-Duty Automotive Technology and Fuel Economy Trends: 1975 through 2008. [EPA420-R-08-015]

Emissions from Transportation of Construction Materials

Trip Type	Total Number of Trips	Average Trip Distance	Total Miles Travelled	Average Semi-truck Fuel Efficiency	Total Fuel Consumption (gal. diesel)	CO_2e/gal Diesel [3]	Total CO_2 Equivalent Emissions (metric tons)
Delivery	796	100	79600	6.5	12246.2	0.010	127
TOTAL			79600		12246.2		127

Construction Electricity Emissions

	MWh of electricity	$mtCO2_e$/ MWh[5]	CO_2 e emissions
Electricity Needed		0.310	0

[5] eGRID2010 Version 1.0, February 2011 (Year 2007 data) CAMX-WECC sub-region.

Total Construction Activity Emissions **790.5 (from lines 25, 32, 39, and 42)**
Total Years of Construction
Expected Start Date of Construction
Estimated Project Useful life **1 Years**
Average Annual Total GHG Emissions[7] **790.50 MT CO_2 equivalents**

[7]short-term construction emissions amortized over life of project

Appendix I

Public Comments

Appendix I - Public Comments

The Draft EA / IS was circulated through the State Clearinghouse for a 30-day public review from April 22, 2019 to May 22, 2019. Concurrent with the public review, a public notice was published in the legal section of the Red Bluff Daily News on April 22, 2019. No comments were received.