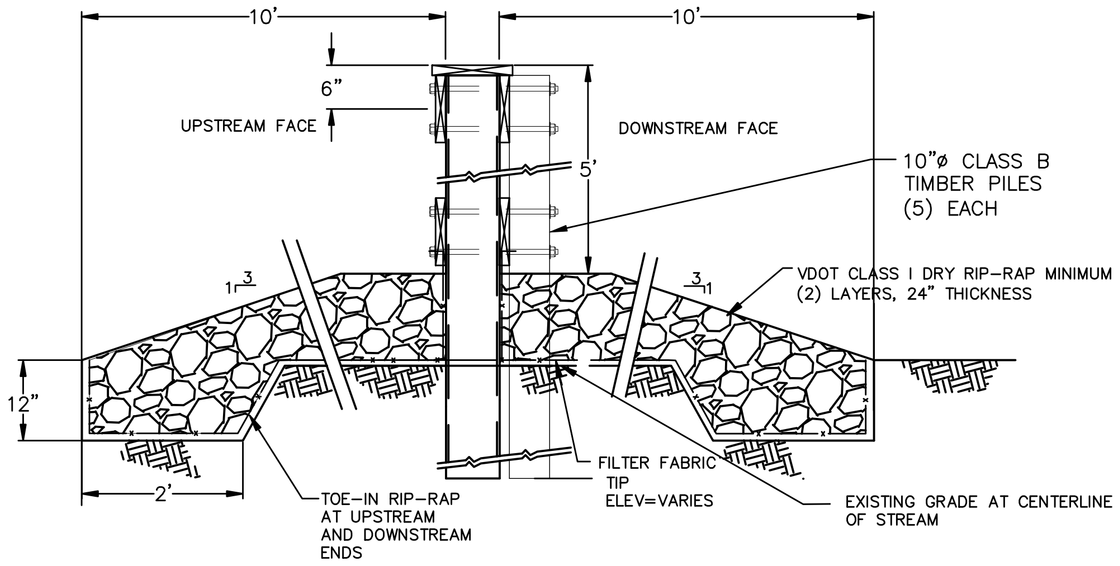

CAP AT WEIR

1/16" = 1"

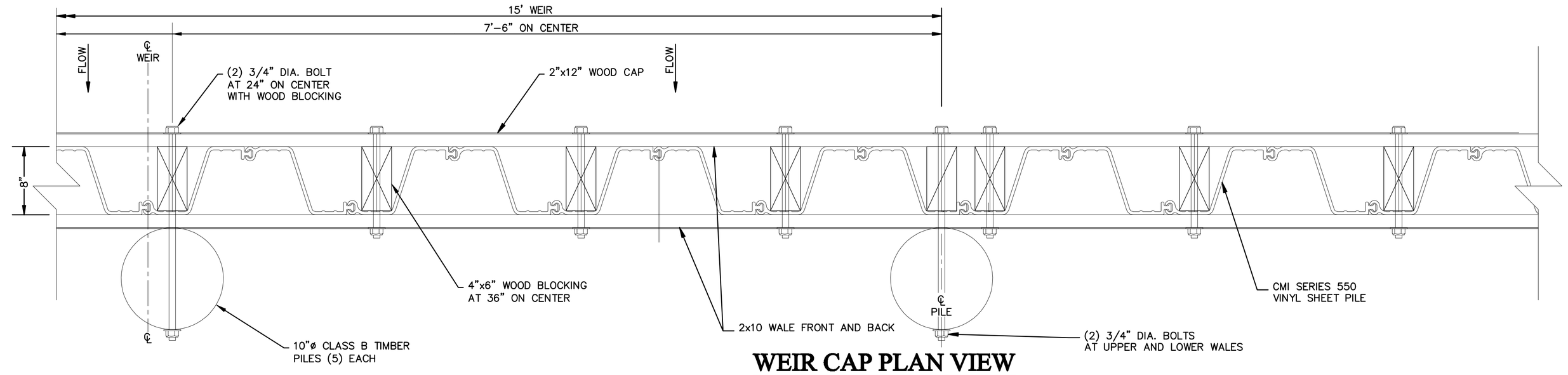

WEIR CAP PLAN VIEW

1/8" = 1"

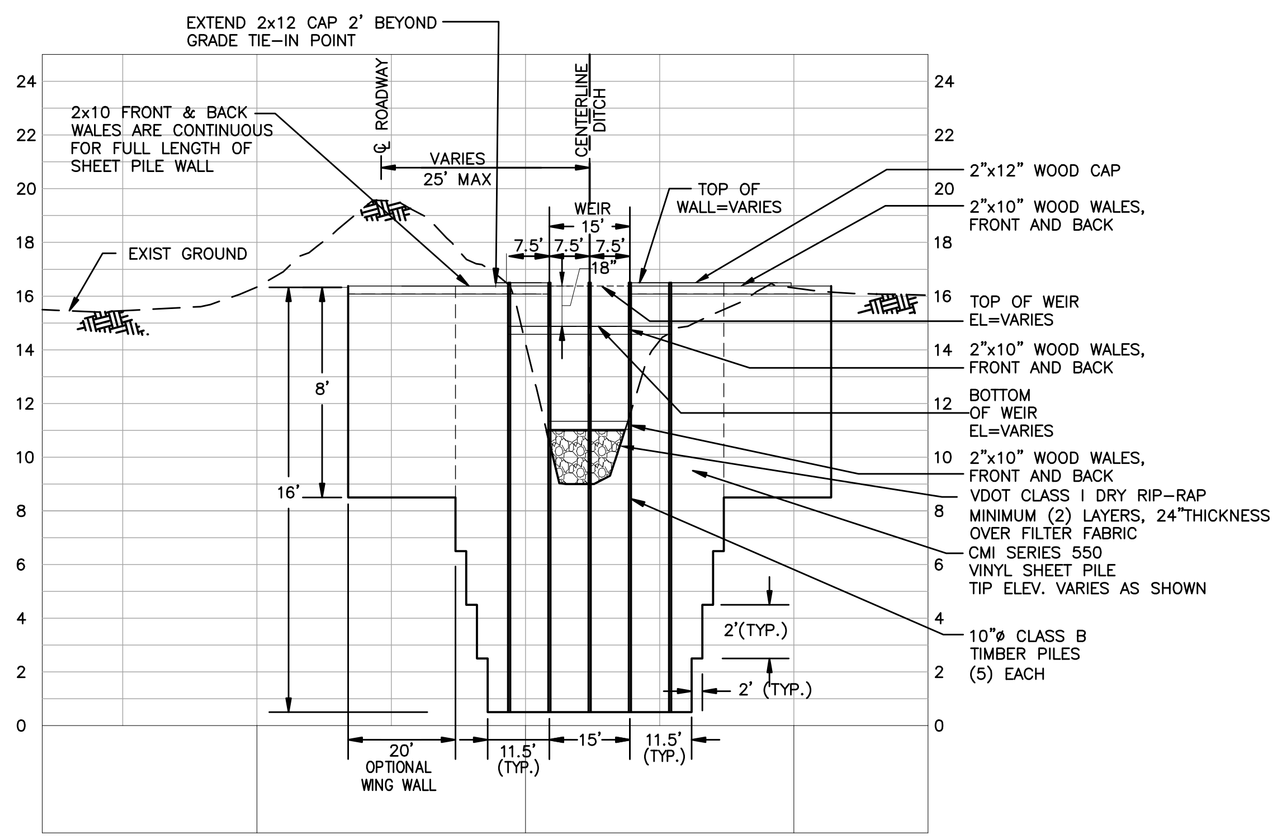

TYPICAL PROFILE

1"=20' HORIZONTAL
1"=4' VERTICAL

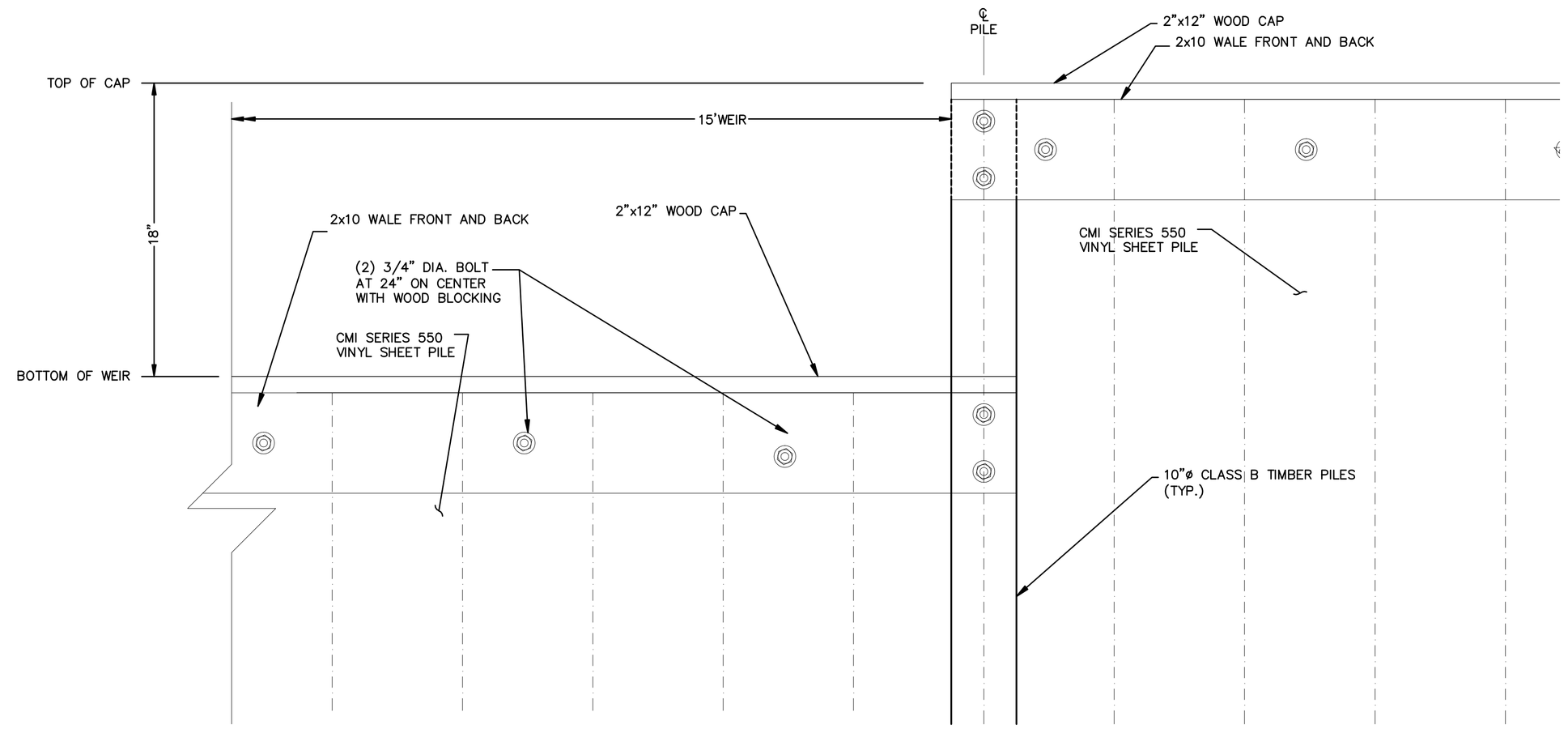

NOTE: TOP AND TIP ELEVATIONS OF
PILES VARY PILE LENGTH= 16'

ELEVATION VIEW
TIMBER CAP AT WEIR

1/8" = 1"

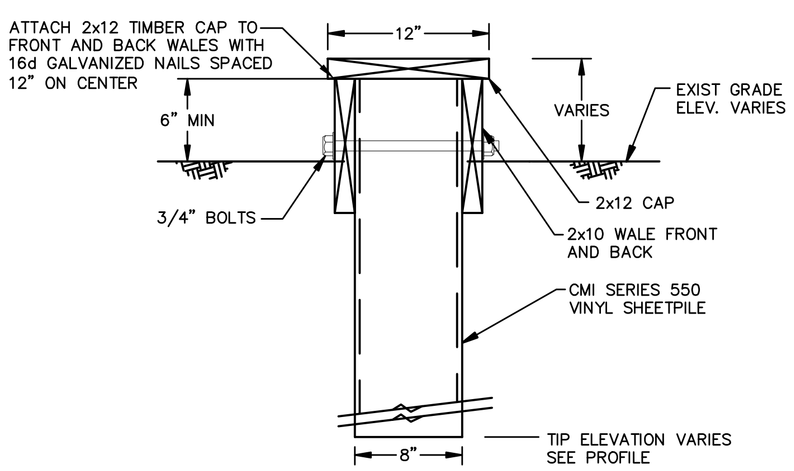

TIMBER CAP SECTION

1/8" = 1"

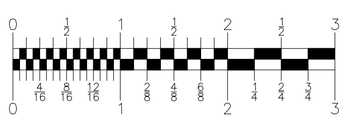

GRAPHIC SCALE

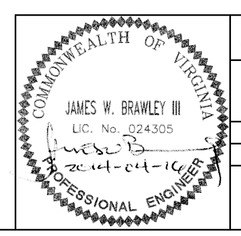

U.S. FISH & WILDLIFE SERVICE
VINYL SHEET PILE STANDARD FIXED WEIR

DETAILS AND
NOTES

DATE: 04/16/2014

SHEET 2 OF 2

J. W. BRAWLEY, PE
P.O. BOX 7035
WILLIAMSBURG, VA. 23188
TEL.:757.645.6680