Genetic structure in the *Anaxyrus boreas* species group (Anura, Bufonidae): an evaluation of the Southern Rocky Mountain population

A Final Report Submitted to the U.S. Fish and Wildlife Service, Mountain-Prairie Region, 4 December 2009

John F. Switzer[§], Robin Johnson, Barbara A. Lubinski, Tim L. King

United States Geological Survey, Leetown Science Center, Aquatic Ecology Branch, 11649 Leetown Road, Kearneysville, WV 25430

[§]Corresponding author

Email addresses:

JFS: jswitzer@usgs.gov

RJ: rjohnson1@usgs.gov

BAL: blubinski@usgs.gov

TLK: tlking@usgs.gov

Abstract

Background

The *Anaxyrus boreas* species group is comprised of four species endemic to the western United States: *A. boreas*, *A. canorus*, *A. exsul*, and *A. nelsoni*. Disjunct populations of the widespread western toad *Anaxyrus boreas* from Colorado and southern Wyoming, the southern rocky mountain population (SRMP), were previously candidates for listing under the United States Endangered Species Act (ESA) as a distinct population segment (DPS), but were removed due to a lack of significant genetic differentiation in preliminary studies. The purpose of this study was to conduct phylogeographic and population genetic analyses of *A. boreas* and three related species using mitochondrial DNA sequence data and nuclear microsatellite genotype data. The study is specifically focused on testing the evolutionary significance of the SRMP.

Results

Phylogenetic, phylogeographic and population genetic analyses were conducted on 470 bp of mitochondrial sequence data from 540 specimens and 890 microsatellite genotypes (12 loci) from throughout the ranges of *Anaxyrus boreas*, *A. canorus*, *A. exsul* and *A. nelsoni*. Phylogenetic analysis did not recover the four species of the *A. boreas* group as monophyletic. Phylogenetic analyses did not recover the SRMP as a monophyletic group, but rather as a part of a more widespread clade comprised of haplotypes from throughout Colorado, Utah and southern Idaho and southern Wyoming. The vast majority of individuals (>98%) from the SRMP region had a single haplotype that was also found in four Utah populations. Clustering of breeding populations in neighbour-joining trees derived from the microsatellite data also grouped the SRMP with

populations from Utah, Idaho and Wyoming. Population genetic analyses of the microsatellite data revealed a considerable amount of isolation among breeding populations.

Conclusions

Analyses of both mtDNA and microsatellite data sets revealed several discernable evolutionary lineages within the *A. boreas* group, including the currently recognized species and several major lineages within *A. boreas*. Despite the presence of several major evolutionary lineages, most breeding populations of *A. boreas* are genetically distinct from one another, with little apparent gene flow. The SRMP of *Anaxyrus boreas* as currently defined is not a unique lineage, it is part of a more widespread evolutionary lineage that includes populations in Utah and south-eastern Idaho. Further research is needed to elucidate the complex evolutionary relationships within the *A. boreas* group, particularly regarding species boundaries.

Background

Western toads (*Anaxyrus boreas*) are one of the most widely distributed species of toads in the western United States, ranging from northern Baja California to southern Alaska and east to the Rocky Mountains of southern Wyoming, Colorado and northern New Mexico (Figure 1). Two subspecies are recognized within *A. boreas*, the California toads (*A. b. halophilus*) that ranges from mid-coastal California south to Baja California and east to extreme western NV, and the boreal toads (*A. b. boreas*) that occupy the rest of the *A. boreas* range [1]. The species most closely related to *A. boreas*, and included in the *A. boreas* species group, are: Yosemite toads (*A. canorus*), black toads (*A. exsul*) and Amargosa toads (*A. nelsoni*) [2-4]. Some workers consider *Anaxyrus nelsoni* to be a

subspecies of *A. boreas*, a taxonomic decision that is somewhat controversial [1, 5, 6]. The other species of the *A. boreas* group have much smaller ranges than *A. boreas*. The entire historical range of *A. nelsoni* may have been approximately 16-km of the Amargosa River and adjacent spring systems of Oasis Valley in Nye County, Nevada [5]. An even smaller range is occupied by *A. exsul*, which is historically known from four spring systems in Deep Springs Valley, Inyo County, California [7]. The range of *A. canorus* encompasses portions of the Sierra Nevada in California, from Alpine County south to Fresno County [8].

The Southern Rocky Mountain population (SRMP) of *Anaxyrus boreas*, which includes southern Wyoming, Colorado, and New Mexico, has experienced severe declines and extirpations of many breeding populations since the 1970s. As of February 2006, *A. boreas* was known to occur in fourteen counties in Colorado and two counties in southern Wyoming. In Colorado there are 44 populations (80 breeding sites), of which only one population is considered viable (Cottonwood Creek, Chaffee County, Colorado) [9]. All breeding populations of *A. boreas* within New Mexico are thought to be extinct as toads have not been observed in over two decades [1, 10]. Numerous causes have been implicated in the decline of *A. boreas* within the eastern portion of its range, including habitat destruction, pollution, disease, changes in weather and increased ultraviolet radiation. One potential cause of decline that has gained increasing empirical support is the pathogenic chytrid fungus, *Batrachochytrium dendrobatidis* [11-14].

The ESA allows for the protection of numerous categories of biological diversity including species, subspecies and distinct population segments (DPSs). The later category was amended to the ESA in 1978 to allow for the listing of DPSs of vertebrate

wildlife and fish, but not invertebrates or plants. In 1996 the U.S. Fish and Wildlife Service (USFWS) and the National Marine Fisheries Service (NMFS) implemented a policy requiring three criteria be met for the classification of a DPS: discreteness of the population segment in relation to the remainder of the taxon, significance of the segment to the taxon, and the conservation status of the segment in relation to the ESA's listing standards [15]. While not required, genetic data can be used to determine the discreteness and significance of DPSs. A recent review of genetic data and the ESA found that 33 (87%) of the 38 listing decisions informed by genetic data and made in a ten year period (February 1996 and February 2006) addressed the DPS classification [16].

The USFWS was petitioned to list the SRMP of *A. boreas* as an endangered DPS under the ESA in 1993. In 1995 the USFWS published a finding that listing the SRMP of *A. boreas* as endangered under the ESA was warranted, but precluded by higher priorities, rendering the SRMP of *A. boreas* as a formal candidate for listing [17]. After a review of available information, the USFWS published a finding in 2005 that the SRMP of *A. boreas* was no longer a candidate for listing [18]. The decision not to list the SRMP of *A. boreas* was based on the conclusion that the SRMP did not meet all of the criteria necessary to be considered a DPS. The SRMP of *Anaxyrus boreas* was found to be discrete based on the nearly 250 km of inhospitable habitat separating the SRMP of *A. boreas* from the nearest populations in Utah. A review of available genetic data [19-21], however, did not provide evidence that the SRMP of *A. boreas* was significantly different from other populations of *A. boreas* [18]. The genetic data reviewed included mitochondrial DNA sequence data (mtDNA) and nuclear DNA AFLP data [21] (A.

Goebel, various unpublished reports; A. Goebel, unpublished dissertation, 1996). Analysis of these data with phylogenetic methods recovered SRMP populations together, often in clades with western Wyoming, Utah and Idaho populations. Due to the close phylogenetic relationship of SRMP *A. boreas* to nearby populations, the SRMP was not considered to be significantly different from other populations of *A. boreas* [18]. The finding published by the USFWS suggested that additional nuclear DNA data, such as microsatellites, and additional mitochondrial DNA sequence data was needed to resolve the genetic relationships within and between the SRMP and other Rocky Mountain populations of *A. boreas*.

Recently Goebel et al. [2] published a molecular phylogenetic study of the *Anaxyrus boreas* species group. The data set utilized by Goebel et al. [2] included sequences from three mtDNA regions and mtDNA restriction site data. A total of 288 samples from collection 58 sites were examined; the greatest number of samples from a single data partition was the restriction site data, comprised of 194 samples. Phylogenetic analyses of the mtDNA data recovered haplotypes from the SRMP of *A. boreas* in a well supported clade with Utah populations, referred to as the Eastern major clade. Two other major clades were recovered by Goebel et al 2009: a Northwest (NW) major clade and a southwest (SW) major clade. The NW major clade was comprised of *A. boreas* from north-western Utah, north-western Wyoming, Montana, Idaho, Washington, Oregon, Nevada and California, and *A. canorus*. The SW major clade was comprised of *A. canorus*, *A. exsul*, *A. nelsoni* and *A. boreas* from southern California. Relationships of the major groups were unresolved and none of the species were recovered as reciprocally monophyletic. While the results of the phylogenetic analyses

were not consistent with existing specific and subspecific taxonomy within the *A. boreas* species group, Goebel et al. (2009) did not make any taxonomic changes.

The purpose of this study is to provide a comprehensive analysis of evolutionary relationships within the *A. boreas* species group using both mitochondrial and nuclear markers. The importance of utilizing multiple independent loci when delimiting species and unique evolutionary lineages has been discussed extensively in the literature, particularly in light of the difficulties in identifying species within rapidly speciating groups [22]. Utilizing multiple independent loci is also extremely important when delimiting intraspecific groupings such as subspecies and DPS [16]. The markers utilized in this study were mitochondrial control region sequence data and multilocus nuclear microsatellite genotypes. This study is particularly focused on elucidating the evolutionary relationships of the SRMP DPS to the rest of the *A. boreas* group and meeting the information needs identified by the US Fish and Wildlife service.

Results

Mitochondrial DNA

A total of 510 *Anaxyrus boreas*, 13 *A. canorus*, 9 *A. exsul* and 8 *A. nelsoni* control region sequences were generated for this study. One *A. americanus* and two *A. fowleri* were sequenced for use as outgroups, with all three sequences being unique. The aligned control region sequences were 470 characters in length, with 146 characters parsimony informative and 297 constant characters. The total number of haplotypes observed within the *A. boreas* group was 41, with 35 haplotypes observed in *A. boreas*, four in *A. canorus*, two in *A. exsul* and one in *A. nelsoni* (Table 1). A single haplotype (BH) was observed in both *A. boreas* (n = 8) and *A. nelsoni* (n = 8). No other haplotypes were

shared among species within the *A. boreas* species group. Within *A. boreas*, 239 of the 243 individuals from the SRMP had a single haplotype (AA) that was also found in four UT populations. Haplotype diversity ranged from 0.000 to 0.952 in *A. boreas* breeding sites and nucleotide diversity (π) ranged from 0.000 to 0.021 (Table 2). Only three of the 46 (6.5%) neutrality tests conducted were significant (Table 2).

Analysis of the control region data with statistical parsimony as implemented by the program TCS resulted in five unconnected haplotype networks. The maximum number of mutational steps at the 95% confidence limit was seven. Nesting of the haplotype networks resulted in the unconnected networks being labelled 4-1, 3-1, 2-10, 1-18 and a zero step clade BO (Figure 2). The geographic distribution of clade 4-1 was greatest of the five clades; it was comprised of populations from north-western Wyoming, Idaho, Washington, Oregon and California (Figure 3). The geographic distribution of Clade 4-1 overlapped in its distribution with clades 3-1 and 2-10. Clade 3-1 was comprised of all populations from Colorado, southern Wyoming, Utah (excluding UT11) and south-eastern Idaho (ID1 and ID2). Specimens from populations ID1 and ID2 had haplotypes that were recovered in both clades 4-1 and 3-1. Clade 2-10 was comprised of populations of *Anaxyrus boreas* (population CA2), *A. nelsoni* (NV1), *A. exsul* (CA3), and *A. canorus* (CA4). Specimens of *A. boreas* from population CA2 had haplotypes that were recovered as part of clades 4-1 and 2-10. Clade 1-18 consisted of haplotypes from *A. canorus* populations CA4 and CA5. Haplotypes from population CA4 were recovered in both clades 2-10 and 1-18. Haplotype BO, the only zero step clade, was found in population UT11 of *A. boreas*.

Parsimony analysis of the control region dataset resulted in 15 most parsimonious trees at 255 steps (strict consensus shown in Figure 4). Species of the of the *A. boreas* species group were not recovered as reciprocally monophyletic. The basal most clade within the *A. boreas* group contained the two *A. exsul* haplotypes sister to each other, a single *A. canorus* haplotype (BK) sister to the *A. exsul* haplotypes, and a haplotype (BH) that was found in both *A. boreas* and *A. nelsoni* sister to the *A. canorus* and *A. exsul* haplotypes. Support for this clade was strong, with a bootstrap of 98 % and Bremer support value of 6. Support for monophyly of *A. exsul* within this clade was weak with a bootstrap of 50 % and a Bremer support value of 1. This clade, labelled 2-10, was sister to a clade comprised of the remaining *A. boreas* and *A. canorus* haplotypes. The three remaining *A. canorus* haplotypes formed a well supported clade (bootstrap 94% and Bremer support value of 4) sister to a clade of the remaining *A. boreas* haplotypes. Within the clade of *A. boreas* haplotypes there were two well supported clades sister to one another. One clade, supported by a bootstrap of 88 and Bremer support value of 4 was comprised of haplotypes from all Colorado and Utah populations, southern Idaho (populations ID1 and ID2), and southern Wyoming (populations WY1 and WY2). Within this clade haplotypes consistent with clade 3-1 of the haplotype network were recovered as weakly supported clade sister to a haplotype (BO) from the southernmost Utah population UT11. The other well supported clade, with a bootstrap of 89% and Bremer support value of 4, was comprised of two weakly supported clades consistent with clades 3-2 and 3-3 of the haplotype network. Clade 3-2 consisted of haplotypes from populations in ID, OR, MT, and WY, while clade 3-3 consisted of haplotypes from populations in ID, OR and MT. Sister to the clade comprised of 3-1, 3-2, and 3-3 was a

clade comprised of haplotypes from WA, CA, and ID that was consistent with clade 3-4 from the haplotype network.

MrModeltest [23] chose the HKY+G model of evolution using the Akaike information criterion. Bayesian phylogenetic analyses of the control region data set reached stationarity after approximately 50,000 generations. To be conservative, the first 5000 trees were discarded as burn-in. The remaining 15000 trees were used to calculate posterior probabilities of relationships. Both Bayesian analyses resulted in identical topologies with the same clades identified with significant ($P \geq 0.95$) posterior probabilities. A phylogram from one of the two analyses is shown in Figure 5. Several of the clades with significant posterior probabilities were also recovered with the parsimony analysis and statistical parsimony. Clades recovered with significant posterior probabilities were: the clade containing 3-1 and haplotype BO; clade 2-10; clade 1-18. Relationships of these major clades did not have significant posterior probabilities. Within clade 3-1 there were two significant clades, one comprised of individuals from CO, UT and southern ID and the other comprised of two haplotypes from north-western UT.

Analysis of the hierarchical partitioning of genetic variation (AMOVA) revealed significant genetic structuring at multiple levels. When an AMOVA examining structure among all species of the *A. boreas* group was conducted using *F*-statistics, 24% of molecular variance was observed among species, 55% among populations within species, and 21% within populations (all with $P < 0.001$; Table 3). When an AMOVA examining structure among all species of the *A. boreas* group was conducted using Φ-statistics, 53% of molecular variation observed was among species, 41% among populations within

species, and 6% within populations (all with P < 0.001; Table 3). When an AMOVA examining structure among all *A. boreas* populations was conducted using *F*-statistics, 73% of molecular variance observed was among populations and 27% within populations (all with P < 0.001; Table 3). When using *Φ*-statistics: 88% of molecular variance observed was among populations and 12% within populations (all with P < 0.001; Table 4). When an AMOVA examining partitioning of variation among the SRMP and Utah populations was conducted using *F*-statistics 51% of molecular variance was observed among regions, 37% among populations within regions, and 12% within populations (all with P < 0.001; Table 3); when using *Φ*-statistics 45% of molecular variance was observed among regions, 50% among populations within regions, and 5% within populations (all with P < 0.001; Table 3). An AMOVA examining structure among *A. boreas* clades 4-1 & 3-1 (excluding populations ID1 & ID2) using *F*-statistics partitioned 44% of molecular variance among clades 4-1 and 3-1, 36% among populations within the clades, and 20% within populations (all with P < 0.001; Table 3); when using *Φ*-statistics 83% of molecular variance was observed among clades 4-1 and 3-1, 13% among populations within the clades, and 4% within populations (all with P < 0.001; Table 3).

Microsatellite DNA

A total of 857 *Anaxyrus boreas*, 15 *A. canorus*, 10 *A. exsul* and 8 *A. nelsoni* were genotyped at 12 loci for this study. Of the 857 *A. boreas* genotypes generated, a total of 836 were unique. Nine genotypes were recovered in more than one individual of *A. boreas*. Samples with identical genotypes were collected from breeding populations in CO (CO1, CO2, CO4, CO6 and CO 9) and UT (UT5). Duplicates genotypes were always observed within a breeding population, never between breeding populations.

Sample types that resulted in duplicate genotypes included: eggs, tadpoles, buccal swabs of adult toads, and toe clips from adult toads. Within the samples of *A. canorus*, *A. exsul* and *A. nelsoni* each individual had a unique genotype. Duplicates of genotypes within *A. boreas* were excluded from subsequent statistical analyses. The number of alleles observed per locus ranged from 1 at several loci in *A. canorus*, *A. exsul*, and *A. nelsoni*, to 33 at locus Bbr16 in *A. boreas* (Table 4). The number of private alleles within species ranged from 2 in *A. exsul* and *A. nelsoni*, to 62 in *A. boreas*. Within *A. boreas*, seven breeding populations had private alleles. The number of private alleles per breeding population ranged from one to ten (Table 5). The mean frequency of private alleles was 0.058 and ranged from 0.010 to 0.308.

Within *Anaxyrus boreas* only eight (2.4%) of the 339 locus-by-population comparisons deviated from Hardy-Weinberg equilibrium expectations after sequential Bonferroni correction for multiple tests. Linkage disequilibrium was estimated in a total of 66 locus combinations for 36 populations. Prior to sequential Bonferroni correction ($P < 0.05$) there were a total of 161 (6.8 %) significant comparisons; this is slightly higher than the number expected by chance (0.05 = 119). After sequential Bonferroni correction only eight (0.3 %) of the comparisons were significant. Within *A. canorus* none of the 12 locus-by-population comparisons deviated from Hardy-Weinberg, expectations after sequential Bonferroni correction for multiple tests. Linkage disequilibrium was estimated in a total of 55 locus combinations. Prior to sequential Bonferroni correction ($P < 0.05$) there were a total of 16 (9.2 %) significant comparisons; higher than the number expected by chance (0.05 = 2.75). After sequential Bonferroni correction there were no significant comparisons. Within *A. exsul* none of the 12 locus-by-population

comparisons made deviated from Hardy-Weinberg expectations after sequential Bonferroni correction for multiple tests. Linkage disequilibrium was estimated in a total of 36 locus combinations. There were no significant comparisons prior to sequential Bonferroni correction ($P < 0.05$). Within *A. nelsoni* two (17%) of the 12 locus-by-population comparisons deviated from Hardy-Weinberg expectations after sequential Bonferroni correction for multiple tests. Linkage disequilibrium was estimated in a total of 45 locus combinations. Prior to sequential Bonferroni correction ($P < 0.05$) there were a total of 10 (22 %) significant comparisons; this is much higher than the number expected by chance (0.05 = 2.25). After sequential Bonferroni correction none of the comparisons were significant.

The average F_{ST} among breeding populations within CO was 0.114 ± 0.123; the average R_{ST} was 0.385 ± 0.231 (Table 6). Populations CO1 and CO9 had particularly high F_{ST} values when compared to other CO populations. The average R_{ST}/F_{ST} ratio between populations was 8.6 ± 9.1. The average F_{ST} among CO populations and geographically proximate populations from outside CO (UT1-UT9, ID1, ID2, and WY3) was 0.080 ± 0.092 and the average R_{ST} was 0.442 ± 0.235. The average R_{ST}/F_{ST} ratio among CO populations and geographically proximate populations from outside CO was 14.8 ± 19.0. Among different species in the *A. boreas* group the average F_{ST} was 0.033 ± 0.059 and the average R_{ST} was 0.645 ± 0.240. The average R_{ST}/F_{ST} ratio between species was 93.9 ± 149.7. The high R_{ST}/F_{ST} ratios observed at all levels of comparison indicate mutational processes are a significant cause of genetic differentiation, rather than simply drift.

Neighbour-joining trees generated using Nei's standard genetic distance [24] and chord distances [25] were similar in their topologies (Figure 6). Terminal branch lengths were greater in relation to internal branch lengths when chord distances were used. In both trees, *A. boreas* populations representing the SRMP clustered closely with populations from UT (excluding UT10), ID1, ID2, and WY3. Within this cluster, CO1 breeding population was separated by a relatively high distance. Populations of *A. boreas* from ID (ID3-ID6), MT, OR, and WA formed a cluster separated from the eastern *A. boreas* cluster by a relatively high distance. Within this cluster, the two WA populations clustered together but were separated from the other populations by relatively high distances. Intermediated between these two clusters was the UT10 breeding population. The two populations of *A. boreas* from CA were greatly divergent from the other *A. boreas* populations and clustered most closely with *A. nelsoni*. *Bufo canorus* and *A. exsul* were closely associated with this cluster, albeit with relatively long branches. While long branches can be the result of small population sizes when using chord distances, the Nei's standard genetic distance corrects for small populations sizes. Numerous long branches were observed on the neighbour-joining tree generated with Nei's standard distance.

Assignment of individuals to breeding populations was highly successful, with 97% of individuals correctly assigned to breeding population (Table 7). The few individuals incorrectly assigned to their breeding population of origin were assigned to geographically proximate populations.

The two STRUCTURE analyses conducted converged on relatively large K values with moderate levels of multimodality. The log Pr(X|K) values resulting from the

STRUCTURE analysis of all specimens of the *A. boreas* species group peaked at K=17, after which the log Pr(X|K) values rapidly decreased and fluctuated with large standard deviations (Figure 7). The mean of 10 permuted replicates at K=17 are shown in Figure 8 and the plots of each replicate given in Figure 9. The log Pr(X|K) values from the analysis of all *A. boreas* populations plateau at approximately K=13, after which the log Pr(X|K) values increase at very slightly, but with higher standard deviation (Figure 7). The mean of 10 permuted replicates at K=13 are shown in Figure 8 and the plots of each replicate given in Figure 10.

The assignment of individuals to clusters with STRUCTURE was largely consistent among the two analyses conducted. In both analyses there were high probabilities of both individual breeding populations assigning to distinct clusters (e.g. UT9 and UT10) and groups of breeding populations being assigned to clusters (e.g. ID4, ID5, OR1, OR2 and OR3). In general, the assignment of individuals to clusters with STRUCTURE was biologically reasonable given their breeding population distributions. There were also several breeding populations from which individuals were either assigned to numerous populations with low probabilities (admixed), or assigned to different clusters across replicates with high probabilities (multimodality): the UT8 population of *A. boreas* is a breeding population from which individuals assigned to multiple clusters across all runs, possibly due to admixture; the CO1 breeding population of *A. boreas* is an example of a population that was assigned to different clusters across runs due to multimodality. It is possible that some of the observed admixture/multimodality may be due to small sample sizes for some of the breeding populations. The SRMP population of *A. boreas* was not recovered as a cluster by either

of the STRUCTURE analyses. Contrary to the recovery of the SRMP as a distinct cluster, individuals from several SRM breeding populations (CO10, CO11, and WY2) were assigned with high probabilities to a cluster with individuals from a Utah breeding population (UT5). Individuals from several other SRM breeding populations were assigned to clusters together: breeding populations CO2, CO3 and CO4 were assigned to a cluster; CO7, CO8 and CO9 were consistently assigned to the same cluster.

The STRUCTURE analysis of all *Anaxyrus boreas* species group populations did not result in the assignment of each species to separate clusters. In nine of the ten replicates individuals from *A. canorus* breeding populations CA4 and CA5 were assigned to a cluster with individuals from *A. boreas* breeding population CA1. In seven of the ten replicates, individuals of *A. b. halophilus* from breeding population CA2 were also assigned to this cluster, as were individuals from the *A. nelsoni* breeding population NV1.

Analysis of the hierarchical partitioning of genetic variation (AMOVA) revealed significant genetic structuring at multiple levels. When an AMOVA examining structure among all *A. boreas* populations was conducted using *F*-statistics 33% of molecular variance observed was among populations and 67% within populations (all with $P < 0.001$; Table 3). When using *R*-statistics: 41% of molecular variance observed was among populations and 59% within populations (all with $P < 0.001$; Table 3). When an AMOVA examining structure among all species of the *A. boreas* group was conducted using *F*-statistics, 20% of molecular variance was observed among species, 27% among populations within species, and 54% within populations (all with $P < 0.001$; Table 3). When using *R*-statistics, 44% of molecular variation observed was among species, 23% among populations within species, and 34% within populations (all with $P < 0.001$; Table

3). When AMOVA partitioning clade 3-1 into two regions-(1) the SRMP and (2) all UT populations, ID1 and ID2-was conducted using *F*-statistics 6% of molecular variance was observed among regions, 30% among populations within regions, and 64% within populations (all with $P < 0.001$; Table 3). When the same partitioning was examined using *R*-statistics 27% of molecular variance was observed among regions, 26% among populations within regions, and 47% within populations (all with $P < 0.001$; Table 3). An AMOVA examining structure among *A. boreas* clades 4-1 and 3-1 (excluding ID1 & ID2) using *F*-statistics 19% of molecular variance was observed among regions, 20% among populations regions, and 60% within populations (all with $P < 0.001$; Table 3). When the same partitioning was examined using *R*-statistics 22% of molecular variance was observed among regions, 26% among populations within regions, and 52% within populations (all with $P < 0.001$; Table 3).

The Genetic Landscape Shape interpolation analysis provided a means of graphically depicting patterns of genetic diversity across the landscape (Figure 11). Similar results of the Genetic Landscape Shape interpolation were obtained with the different rectangular grid sizes and distance weighting parameters used. The surface plots revealed a widespread pattern of genetic distance increasing with longitude. In addition, the surface plot had many high peaks between breeding populations, indicating large genetic distances between populations, consistent with the R_{ST}, F_{ST}, AMOVA and assignment test results. The isolation-by-distance test was significant ($r = 0.45$; $P < 0.001$).

Discussion

Major lineages within the A. boreas group

It is extremely challenging to synthesize the different evolutionary relationships indicated by the two genomes examined in this study and clearly delineate hierarchical taxonomic and management categories such as species, subspecies, distinct population segments, and management units. When data from both genomes are compared, concordant discrete hierarchical relationships are difficult to detect. However, there are similarities in the major evolutionary relationships recovered by the two datasets. The clade comprised of Utah haplotype BO and Clade 3-1, which included populations of *A. boreas* from Colorado, Utah, southern Idaho, and southern Wyoming, were recovered as a well supported monophyletic group by both the parsimony and Bayesian phylogenetic analyses. A similar, but not identical, pattern of clustering was observed in the microsatellite neighbor-joining trees. The primary difference being that Wyoming population WY3 clustered with clade 3-1 populations. This is one of the most strongly supported evolutionary lineages recovered. The *A. boreas* populations comprising mitochondrial clade 4-1 clustered together in the neighbor-joining trees, although Utah population UT10 was intermediate between the clade 3-1 and 4-1 clusters. Similar to the results of the phylogenetic analyses, the two California populations of *A. boreas* clustered more closely with *A. nelsoni*, *A. exsul*, and *A. canorus,* than other populations of *A. boreas*. The single *A. nelsoni* haplotype was also recovered in eight *A. boreas* from population CA2. It is possible that increasing the sequence length may result in multiple haplotypes as Goebel et al. [2] found. It is clear, however, that the CA2 population of *A. boreas* and *B. nelsoni* are closely related. Population CA2 is from within the range of the *A. boreas halophilus* subspecies, CA1 and all other *A. boreas* populations are from the range of the nominal subspecies. While the sampling for this study was not designed to

test the subspecific boundaries in the western portion of the *A. boreas* range, the results suggest that the subspecific taxonomy is in need of revision. Resolution of taxonomic issues in the western range of the *A. boreas* group would require increased sampling throughout California. The sampling conducted for a phylogeographic study by M. Stephens (unpublished masters thesis: Sonoma State University, 2001) is complementary to this study and would fill in much of the California distribution of the *A. boreas* group species. This data could be easily combined and analyzed with the data from this study as both studies used the same mtDNA region, however the Stephens data is not published and was unavailable for combined analysis in this study.

The results of an extensive phylogenetic analysis of the *Anaxyrus boreas* group by Goebel et al. were largely congruent with the result of this study. Goebel et al. [2] recovered three major clades: a north-western clade consisting of *A. boreas* populations from California, Oregon, northwest Wyoming, Washington, Idaho, Montana, Nevada, and Alaska and *A. canorus*; an eastern clade including *A. boreas* populations from Colorado, Utah and northeast Nevada; and a south-western clade consisting of *A. boreas* populations from southern California, *A. nelsoni*, *A. exsul*, and *A. canorus*. The three major clades recovered by Goebel et al. are largely the same as those recovered in Bayesian analysis of this study, the major difference being placement of the root. Goebel et al. [2] rooted their control region trees with ingroup taxa using a coalescent clock model. This method is quite different from the outgroup rooting used in this study, and accounted for most of the topological differences observed between the Bayesian control region trees generated by these studies. Outgroup rooting of the Bayesian phylogeny generated by this study placed the root within the northwest clade of Goebel et al. [2].

There was a greater difference between the parsimony topology of this study and the Bayesian control region phylogeny of Goebel et al., largely due to the relationships of *A. boreas* populations comprising clades 3-1 through 3-4. It is important to note that there was little to no support for the relationships of clades 3-1 through 3-4 in the parsimony analysis, while support for the individual clades was relatively high. The recovery of *Anaxyrus canorus* as polyphyletic is consistent with previous studies that found *A. canorus* to be paraphyletic or polyphyletic [4, 26-28].

While this study was not specifically designed to test species boundaries within *A. boreas* species group, it provides insight into the complex evolutionary history of these species. All of the major evolutionary lineages observed in this study overlap at the margins of their ranges, most likely due to a combination of vicariance leading to differentiation of the lineages, followed by periods of dispersal resulting in secondary contact. Goebel et al. [2] estimated that the major mtDNA control region lineages began diverging approximately 1.42-0.658 Mya using a rate of 1.64% bp changes per lineage per million years derived from a study of *Bufo viridis* by Stock et al. [29]. This dating places the divergence of major lineages within the Pleistocene. Pleistocene divergence followed by post-Pleistocene dispersal and secondary contact of major lineages is a plausible explanation for the patterns observed in the *A. boreas* species group. Such a scenario has been proposed for numerous groups of North America biota, including other anurans such as the *Bufo americanus* complex [30, 31]. The range overlap between *A. boreas* clades 3-1 and 3-2 is best explained as secondary contact following vicariance. These two lineages are significantly different, but both clades overlap at the edge of their

ranges, populations ID2 and ID3. One would expect a more widespread geographic distribution of shared haplotypes if this was due to incomplete lineage sorting[32].

The observation of haplotype BH in both *A. boreas* and *A. nelsoni* is confounding, as the species are not sympatric. It is possible that the observation of haplotype BH in both species may be due to the length of the sequence generated for this study. Goebel et al. [2] found several haplotypes in both species when a comparable 537 bp fragment of the mitochondrial control region was examined; increasing the length of the control region fragments to 882 bp resulted in an increased number of unique haplotypes, with none shared between the species. Even if the haplotype is identical, its presence in both *A. boreas* and *A. nelsoni* is most likely due to recent common ancestry without sufficient time for divergence, rather than recent gene-flow, as *A. nelsoni* populations are isolated from *A. boreas*[5]. Analysis of the microsatellite data clustered *A. nelsoni* most closely with the CA2 and CA1 populations of *A. boreas*, albeit with relatively long branches, indicating a considerable amount of differentiation. *Anaxyrus exsul* was also recovered with the taxonomically confounding clade 2-10. This is particularly interesting given the divergent morphology of *A. exsul*, which is black rather than the brown of most toads, and the isolated range of this species in desert springs[7]. In contrast to the control region data, the microsatellite based genetic distance between *A. exsul* and other member of the group is very large. The discrepancies between the mitochondrial and nuclear data sets is possibly due to speciation as a result of recent vicariance, followed by rapid local adaptation to the unique desert spring habitat or drift. Isolation of *B. exsul* has not been long enough for the mitochondrial genome to achieve reciprocal monophyly with other members of the *A. boreas* group. The evolutionary history of *E. canorus* is similar to that

of *A. exsul*, in that the mitochondrial genome has not had time reach reciprocal monophyly, while the nuclear genome is extremely divergent from other species in the group, as illustrated with the microsatellite neighbour-joining trees (Figure 6). *Anaxyrus canorus* was observed to have 29 private alleles, an extremely high number, when all species in the *A. boreas* group are compared. In addition to the divergence from other members of the *A. boreas* group, the microsatellite data supported *A. canorus* as a single evolutionary lineage. Grouping both collection sites of *A. canorus*, CA4 and CA5, did not cause departures from Hardy-Weinberg equilibrium expectations. A neighbour-joining tree of the Da distances between each individual (not shown), rather than breeding populations, clustered all of the *A. canorus* individuals together. Overall there is strong support for *A. canorus* and *A. exsul*, being unique evolutionary lineages and moderate support for *B. nelsoni*. It is important to consider both the pattern (vicariance, dispersal) and process (adaptive) of speciation when evaluating the speciation process [33], particularly with regard to the *A. boreas* species group.

Relationships of populations within major lineages

Populations within the major lineages have historical genetic relationships, as demonstrated by the phylogenetic and neighbour-joining trees; however most of the breeding populations currently appear to be isolated from one another and diverging rapidly. This is supported by the high microsatellite F_{ST} and R_{ST} values between breeding populations, the high degree of success in assigning individuals to breeding populations with the microsatellite data, and the AMOVA results. Within the clade 3-1 there is a limited amount of genetic structure, most breeding populations appeared to be isolated, while some populations in Utah exhibited a slightly higher degree of

connectivity to one another. There was strong evidence that population UT10 represents a unique evolutionary lineage. Populations UT1-UT4 appeared to have had some recent connectivity as they were closely related in many analyses such as the assignment tests, neighbour-joining trees and phylogenetic trees. Population UT11 is a unique lineage that grouped with UT1-UT4 in some analyses. The pattern of high levels of genetic differentiation among relatively close breeding sites has been observed in other amphibians, including species with recent histories of post-Pleistocene colonization [34, 35].

When examining the STRUCTURE assignment tests results, it is tempting to consider the clustering as evidence for sub-structuring. However, in this study the clustering of breeding populations into a number of clusters (K) less than the total number of possible groups (breeding populations) is most likely due to a lack of sufficient numbers of loci for accurate assignment, given the large number of potential populations [36, 37]. Several other studies of amphibians with highly differentiated breeding populations have reported STRUCTURE selecting a number of clusters (K) far less than the actual number of populations [34, 38]. Selection of a number of clusters (K) below the actual number of subgroups has also been reported for organisms surveyed with large numbers of loci, such as chicken breeds [39]. Given the potential for STRUCTURE to underestimate the correct number of clusters (populations), we consider the high microsatellite F_{ST} and R_{ST} values between breeding populations, the high degree of success in assignment using GeneClass, and the AMOVA results, all of which indicate a high level of isolation among breeding populations, the most accurate depiction of current population structure within the *A. boreas* species group.

Lack of evidence for genetic significance of SRMP

In so far as the primary objective of this study, testing the evolutionary significance of the *A. boreas* SRMP, analyses of the nuclear and mitochondrial data arrive at a common conclusion, that the SRMP is not significantly differentiated genetically from nearby populations of *A. boreas*. Phylogenetic analyses of the mtDNA data and distance analyses of the microsatellite genotype data recovered SRMP in clades/clusters with *A. boreas* populations from western Wyoming, Utah and south-eastern Idaho (clade 3-1). The study by Goebel et al. [2], the only prior research to extensively examine the range-wide intra-specific phylogeography of *A. boreas* with mitochondrial sequence data, also did not recover the SRMP as monophyletic. Goebel et al. recovered the SRMP in a clade with toads from Utah and north-eastern Nevada, consistent with the results of this study. While we do not consider monophyly a necessary criterion for recognition of intra-specific categories such as DPS, or species for that matter, the strongly supported relationship of SRMP to Utah and Idaho populations-including widespread sharing of identical haplotypes-indicate that the SRMP as currently defined, is not a significantly different evolutionary lineage from adjacent populations in Utah and Idaho. The microsatellite data from this study are consistent with the mitochondrial sequence data in that breeding populations from the SRMP clustered with breeding populations from Utah and southern Idaho.

One slight difference between the microsatellite neighbour-joining tree (chord distance) and the mitochondrial phylogenies generated in this study was the clustering of breeding populations from north-western Wyoming with southern Idaho and a northern Utah breeding population. The mitochondrial phylogenies recovered haplotypes from

southern Idaho in two different clades, one comprised of the SRMP and Utah populations (clade 3-1) and the other comprised of populations from throughout Idaho and Oregon (clade 3-2). The northern Utah breeding populations were recovered in the clade 3-1, while the north-western Wyoming breeding population was recovered in clade 3-2. Direct comparison to the Goebel et al. study regarding the relationship of south-eastern Idaho populations is not possible as their study did not include samples from that region.

In addition to the phylogenetic and clustering analyses, the AMOVA conducted on both data sets comparing SRMP and populations from Utah and southern Idaho generally found as much variation-or greater-between populations within regions, as between the regions. Furthermore, assignment tests did not assign the SRMP to a single cluster or group of clusters consistent with the SRMP; individuals from some SRMP populations-such as CO10, CO11, and WY2-were assigned to a cluster with individuals from Utah population UT5. Across all of the analyses there was strong support for the SRMP being part of a more widespread evolutionary lineage that includes populations from Utah and southern Idaho. Within this evolutionary lineage the majority of breeding populations were significantly differentiated from one another with little apparent gene flow.

Conclusions

The microsatellite data provides strong evidence that most of the breeding populations of boreal toads examined are isolated from one another, with very little gene flow between populations. Further research is needed to elucidate the complex evolutionary relationships within the *A. boreas* group, particularly regarding species boundaries. It is important that genetic data should not be considered independent of

ecological, geographic, and other life history differences [40-42]. This is particularly important when considering the species designations within the *A. boreas* species group, given the results of this study.

There is very strong evidence that the SRMP, as currently defined, is part of a more widespread evolutionary lineage that includes populations in Utah and Idaho. It is also probable, given the results of previous studies[2], that this lineage includes populations in north-eastern Nevada.

Methods

Sampling

Tissue samples (toe clips, buccal swabs, blood, and whole tadpoles) for *Anaxyrus boreas* and *A. nelsoni* were collected from 176 sites during the summers of 2005 and 2006. In order to minimize the potential of sampling siblings, eggs were sampled from separate masses and tadpoles sampled from separate schools whenever possible. *Anaxyrus boreas* collections within 8 km of one another were grouped into breeding sites for analyses (Figure 1; Table 8). Archived samples of *A. canorus* (n = 15) and *A. exsul* (n = 10) were obtained from the University of California, Berkeley, Museum of Vertebrate Zoology (Table 8). DNA was isolated from toe clips, muscle tissue, buccal swabs and whole tadpoles that were preserved in 95% and blood samples stored on FTA cards, using the PUREGENE DNA extraction kit (Gentra Systems) and re-suspended in TE (10 mmTris-HCl, pH 8.0, 1 mmEDTA).

Mitochondrial DNA sequence analysis

A portion of the non-coding control region (CR) was amplified by double-stranded PCR using primers ControlP-H (5'- GTC CAT AGA TTC AST TCC GTC AG - 3') and

ControlJ-L (5'- CTA ACG TTT CAC GAA GAT GGA A -3') (Goebel et al. 1999) for *Anaxyrus boreas*, *A. canorus*, *A. exsul* and *A. nelsoni*. Polymerase chain reactions consisted of an initial denaturation at 95 ^{o}C for 3 min, followed by 35 cycles of 1 min at 94 ^{o}C (denaturation), 45 sec at 52 ^{o}C (annealing), and 1 min at 72 ^{o}C (extension), concluding with a final extension period of 10 min at 72 ^{o}C. Polymerase chain reactions consisted of 25 µl total volume, containing 1X MgCl2-free buffer, 2mM MgCl2 solution, 0.25mM of dNTPs, 0.4 µM of each primer, 2.5 units Taq polymerase, 50-100 ng double-stranded DNA template. Negative controls, which did not include template DNA, were set up alongside PCR reactions as checks for contamination of PCR reagents. Polymerase chain reaction products were purified with exonuclease I and shrimp alkaline phosphatase. The CR PCR products were sequenced using ABI BigDye v3.1 terminator cycle sequencing chemistry, with sequences read by an ABI 3100 Genetic Analyzer (Applied Biosystems). The CR fragment was sequenced using primers ControlP-H and ControlJ-L. Cycle sequencing reactions consisted of 30 cycles of 20 sec. at 96 ^{o}C (denaturation), 20 sec at 50 ^{o}C (annealing), and 4 min at 60 ^{o}C (extension). Forward and reverse sequences for each individual were assembled using Sequencher 4.5 (Gene Codes Corporation, Ann Arbor, MI). Clustal X [43] was used to alignments sequences with default settings. Sequences generated in this study are available from GenBank (Accession numbers XXX-XXX). Sequences were compared using Collapse v1.2 (http://darwin.uvigo.es/software/collapse.html) to identify matching haplotypes.

Parsimony analysis of unique control region haplotypes was conducted using PAUP* 4.0b10 [44]. Parsimony analyses consisted of heuristic searches on un-weighted characters, with starting trees obtained via stepwise addition, 1,000 random additions of

sequences per run, and tree bisection-reconnection (TBR) branch swapping on best trees. Gaps in the alignment due to indels were treated as a fifth character state. Nodal support on parsimony trees was assessed using 1,000 bootstrap replicates [45] with full heuristic searches and Bremer support [46], using MacClade v4.08 [47]. *Bufo americanus* and *B. fowleri* were used as outgroups in all analyses. Bootstrap proportions ≥ 70% were considered strong support or an indicator of accuracy [48]

Bayesian phylogenetic analysis of the combined data set was conducted using the program MrBayes 3.0 [49]. The appropriate model of evolution was chosen with the Akaike information criterion implemented by the program MrModeltest[23]. Bayesian phylogenetic analyses were run for 2.0×10^7 generations with random starting trees, default priors, four Markov chains and sampling every 1,000 generations. Stationarity of the MCMC analyses was determined by plotting –lnL values and individual parameter estimates against generation times. Trees from the burn-in were discarded and the remaining trees used to calculate posterior probabilities for clades from their frequencies. Two separate analyses were performed and the resulting topologies and posterior probabilities compared. Posterior probabilies ≥ 95% were considered to be strong support for relationships or an indicator of accuracy [50].

Since the evolution of haplotypes is not a strictly bifurcating process a network of haplotype relationships was generated for the control region haplotype data for *A. boreas*, *A. canorus*, *A. exsul* and *A. nelsoni* using the program TCS v1.12 [51]. TCS connects haplotypes into a network using statistical parsimony [52, 53]. When present, ambiguous loops were resolved using the coalescent based methods [54]. The resulting haplotype networks were then nested to graphically depict the relative age of relationships within

the haplotype network [55-57]. We abstained from further nested clade phylogeographic analyses (NCPA) procedures due to concerns over the validity of NCPA inferences [58-61]

Quantitative estimates of hierarchical gene variation (AMOVA) among species, among populations within species and within populations were conducted with Arlequin 3.1 [62]. Analyses were conducted using both Φ_{ST} (Kimura 2-parameter model) and F_{ST}. Φ_{ST} incorporates sequence divergence (mutation) between haplotypes as well as haplotype frequencies. F_{ST} treats all haplotypes as equally differentiated, and assesses variance distribution based on haplotype frequencies alone and differences between haplotype frequencies are assumed to be due to genetic drift. When Φ_{ST} and F_{ST} values are similar in magnitude, any population differentiation is likely due to genetic drift, but when Φ_{ST} is large, regardless of the F_{ST}, evolutionary depth is implied. Significance of pairwise Φ_{ST} and F_{ST} values were calculated by permuting haplotypes between populations 1,000 times. In order to evaluate population equilibrium Tajima's D, Fu's Fs, haplotype diversity and nucleotide diversity were calculated using Arlequin 3.1.

Microsatellite DNA analysis

12 microsatellite loci developed by two different laboratories were screened in all individuals sampled. The two sets of markers were: 1) Bbr4, Bbr4b, Bbr17, Bbr16, Bbr17, Bbr86, Bbr87b, Bbr201, Bbr233, Bbr281, Bbr292, Bbr293 [63]; and 2) BM224 [64]. Microsatellite DNA amplification consisted of 100-200 ng of genomic DNA, 1X PCR buffer (10 mM Tris-HCl, pH 8.3, 50 mM KCl), 2 mM $MgCl_2$, 0.1 mM dNTPs, 0.5 μM forward (fluorescently labelled) and reverse primer, and 0.05 U *Taq* DNA polymerase (Promega, Madison, WI, USA) in 10 μl. Amplifications were carried out on

either a PTC-200 or PTC-225 thermal cycler (MJ Research, Watertown, MA, USA) using the following: initial denaturing at 95°C for 3 min, 32 cycles of 94°C for 30 sec, 56°C for 30 sec, 72 °C for 40 sec, and a final extension at 72 °C for 10 min. Fragment analysis was performed on an Applied Biosystems (Foster City, CA, USA) ABI 3100 Genetic Analyzer, as described in King et al. (2001). Genescan™ 2.1 Analysis software and Genotyper™ 2.0 Fragment Analysis software (Applied Biosystems) were used to score, bin, and output allelic (and genotypic) data.

Allelic frequencies, deviations from Hardy-Weinberg equilibrium, linkage disequilibrium, and population differentiation were tested for using GENEPOP 3.1b. [65]. Bonferroni adjustments [66] were made for multiple tests. The programs GenAlEx [67] and Arlequin [68] were used to calculate R_{ST} and F_{ST} statistics, identify private alleles, and conduct locus-by-locus analysis of molecular variance (AMOVA). R_{ST} is a similar measure to Φ_{ST} in that it measures divergence between alleles as well as frequency differences. Comparisons of Φ_{ST} and R_{ST} values to F_{ST} values are useful for comparing the relative contributions of migration/drift and mutational processes to population subdivision. AMOVA were performed to quantify and test the observed genetic variation between species, between major clades observed within species, between populations within species, and within populations. Nei's standard genetic distance [24] and chord distances [25] were calculated among populations of all species using Microsatellite Analyzer v4.05 [69]. Neighbour-joining trees were generated from the distance matrices using PHYLIP [70], with bootstrap support for relationships evaluated using Microsatellite Analyzer and PHYLIP.

A surface plot of Genetic Landscape Shapes was generated using the program Alleles In Space [71]. The Genetic Landscape Shape interpolation was generated using a Delauney triangulation-based connectivity network and residual genetic distances. A series of 3-dimensional surface plots of genetic distances were generated using a variety of grid sizes (50 x 50, 100 x 100, 150 x 150) and a range of distance weighting schemes (a=0.5 through a=2) to compare the effects of interpolation parameters on the graphical depiction of the genetic landscape shape.

Two different assignment methods were used to analyze the data, one using a priori populations and the other without a priori populations. Bayesian assignment test methods [72] were used to determine the likelihood of each individual's multilocus genotype being found in the breeding populations from which it was sampled (without replacement) using the program GeneClass [73]. The program STRUCTURE [36] was used to infer the number of populations (K) and assign individuals to populations from the microsatellite genotype data. Two STRUCTURE analyses were conducted, one on the entire microsatellite data set, and the other only on populations of *A. boreas*. The analyses consisted of 10 independent runs at each K, from K= 1 to K= 40. Each run had a burn-in period of 10,000 generations followed by 10,000 generations. Default settings were used, including the admixture model of ancestry, correlated allele frequencies between populations, and no prior information. The optimal number of populations (K) was determined using the approach proposed by Pritchard et al.[36]. Individuals were assigned to populations based on the highest admixture proportion (q) [36]. The program CLUMPP [74] was used to sort out label switching and multimodality resulting from multiple STRUCTURE replicates at each K. CLUMPP was run using the *LargeKGreedy*

algorithm using 1,000 random input orders. The results of CLUMPP were graphically represented using the program DISTRUCT [75].

Authors' contributions

JFS coordinated field work, directed laboratory work, edited and aligned all of the sequence data, conducted all of the data analysis and wrote the manuscript. RJ conducted the majority of the laboratory work. BAL assisted scoring and binning the microsatellite allelic data. TLK coordinated this research.

Acknowledgements

We thank Tina Jackson, Pat Mehlhop, and Deb Mignogno for assistance coordinating field work. Carla Cicero and Jimmy McGuire provided tissue from the Museum Vertebrate Zoology University of California, Berkeley. Anita Shaul, Steve Bazier, Eric Beach, Jamie Bettaso, Evelyn Bull, Paul Corn, Seth Firestone, Kathy Foster, Dale Gomez, Robin Jones, Kelly McAllister, Michael Mills, Erin Muths, Joel Sauder, Doreen Sumerlin, Martha Wackenhut, Kevin Wheeler, and many others collected samples. We thank Cheryl Morrison for comments on the manuscript. Steve Chambers, Anna Goebel, Tod Reeder, and Rocky Ward provided valuable reviews of this manuscript through the US Geological Survey peer review process.

References

1. Muths E, Nanjappa P: **Species accounts: *Bufo boreas***. In: *Amphibian declines: the conservation status of United States species.* Edited by Lannoo MJ. Berkeley and Los Angeles: University of California Press; 2005.
2. Goebel AM, Ranker TA, Corn PS, Olmstead RG: **Mitochondrial DNA evolution in the *Anaxyrus boreas* species group**. *Mol Phylogenet Evol* 2009, **50**(2):209-225.
3. Graybeal A: **Phylogenetic relationships of bufonid frogs and tests of alternate macroevolutionary hypotheses characterizing their radiation**. *Zoological Journal of the Linnean Society* 1997, **119**(3):297-338.
4. Pauly GB, Hillis DM, Cannatella DC: **The history of a nearctic colonization: Molecular phylogenetics and biogeography of the nearctic toads (*Bufo*)**. *Evolution* 2004, **58**(11):2517-2535.

5. Goebel A, Smith HM, Murphy RW, Morafka DJ: **Species accounts: *Bufo nelsoni***. In: *Amphibian declines: the conservation status of United States species.* Edited by Lannoo MJ. Berkeley and Los Angeles: University of California Press; 2005.
6. Crother BI, Boundy J, Campbell JA, Queiroz Kd, Frost RF, Highton R, Iverson JB, Meylan PA, Reeder TW, Seidel ME *et al*: **Scientific and standard English names of amphibians and reptiles of North America north of Mexico, with comments regarding confidence in our understanding. Herpetological Circular, Number 29**. In., vol. Herpetological Circular. St. Louis, Missouri: Society for the Study of Amphibians and Reptiles; 2000.
7. Fellers GM: **Species accounts: *Bufo exsul***. In: *Amphibian declines: the conservation status of United States species.* Edited by Lannoo MJ. Berkeley and Los Angeles: University of California Press; 2005.
8. Davidson C, Fellers GM: **Species accounts: *Bufo canorus***. In: *Amphibian declines: the conservation status of United States species.* Edited by Lannoo MJ. Berkeley and Los Angeles: University of California Press; 2005.
9. Jackson T: **Report on the status and conservation of the boreal toad *Bufo boreas boreas* in southern Rocky Mountains 2006-2007**. In. Denver: Colorado Division of Wildlife; 2008.
10. Jackson T: **Report on the status and conservation of the boreal toad *Bufo boreas boreas* in southern Rocky Mountains 2005**. In. Denver: Colorado Division of Wildlife; 2006.
11. Muths E, Corn PS, Pessier AP, Green DE: **Evidence for disease-related amphibian decline in Colorado**. *Biological Conservation* 2003, **110**(3):357-365.
12. Muths E: **Home range and movements of boreal toads in undisturbed habitat**. *Copeia* 2003, **2003**(1):160-165.
13. Scherer RD, Muths E, Noon BR, Corn PS: **An evaluation of weather and disease as causes of decline in two populations of boreal toads**. *Ecological applications* 2005, **15**(6):2150-2160.
14. Carey C, Bruzgul JE, Livo LJ, Walling ML, Kuehl KA, Dixon BF, Pessier AP, Alford RA, Rogers KB: **Experimental exposures of boreal toads (*Bufo boreas*) to a pathogenic chytrid fungus (*Batrachochytrium dendrobatidis*)**. *Ecohealth* 2006, **3**(1):5-21.
15. U.S. Fish and Wildlife Service, National Marine Fisheries Service: **Policy regarding the recogniction of distinct vertebrate population segments under the Endangered Species Act**. *Federal Register* 1996, **61**(26):4721-4725.
16. Fallon SM: **Genetic data and the listing of species under the US endangered species act**. *Conservation Biology* 2007, **21**(5):1186-1195.
17. U.S. Fish and Wildlife Service: **12-Month finding for a petition to list the Southern Rocky Mountain population of the boreal toad as endangered**. *Federal Register* 1995, **60**(56):15281-15283.
18. U.S. Fish and Wildlife Service: **Revised 12-month finding for the Southern Rocky Mountain distinct population segment of the boreal toad (*Bufo boreas boreas*)**. *Federal Register* 2005, **70**(188):56880-56884.

19. Goebel A: **Genetic analyses of *Bufo boreas*: analyses of toads from Buck and Chall Creeks, Wyoming**. In: *Report to the Colorado Division of Wildlfe.* Denver; 2003.
20. Goebel A: **Systematics and conservation of Bufonids in North America and in the *Bufo boreas* species group**. In: *Unpublished Dissertation.* vol. Ph.D. Boulder: University of Colorado; 1996.
21. Goebel A: **Conservation systematics: the *Bufo boreas* species group**. In: *Amphibian declines: the conservation status of United States species.* Edited by Lannoo MJ. Berkeley and Los Angeles: University of California Press; 2005.
22. Shaffer HB, Thomson RC: **Delimiting species in recent radiations**. *Systematic Biology* 2007, **56**(6):896-906.
23. Nylander JAA: **MrModeltest v2.** In. Uppsala: Uppsala University; 2004.
24. Nei M: **Estimation of average heterozygosity and genetic distance from a number of individuals**. *Genetics* 1978, **89**:538-590.
25. Cavalli-Sforza LL, Edwards AWF: **Phylogenetic analysis: models and estimation procedures**. *American Journal of Human Genetics* 1967, **19**:233-257.
26. Graybeal A: **The phylogenetic utility of cytochrome b: Lessons from bufonid frogs**. *Mol Phylogenet Evol* 1993, **2**(3):256-269.
27. Shaffer HB, Fellers GM, Magee A, Voss R: **The genetics of amphibian declines: population substructure and molecular differentiation in the Yosemite Toad, *Bufo canorus* (Anura, Bufonidae) based on single-strand conformation polymorphism analysis (SSCP) and mitochondrial DNA sequence data**. *Molecular Ecology* 2000, **9**(3):245-257.
28. Stephens M: **Phylogeography of the *Bufo boreas* (Anura, Bufonidae) species group and the biogeography of California**. Sonoma State University; 2001.
29. Stock M, Moritz C, Hickerson M, Frynta D, Dujsebayeva T, Eremchenko V, Macey JR, Papenfuss TJ, Wake DB: **Evolution of mitochondrial relationships and biogeography of Palearctic green toads (Bufo viridis subgroup) with insights in their genomic plasticity**. *Mol Phylogenet Evol* 2006, **41**(3):663-689.
30. Masta SE, Sullivan BK, Lamb T, Routman EJ: **Molecular systematics, hybridization, and phylogeography of the *Bufo americanus* complex in Eastern North America**. *Mol Phylogenet Evol* 2002, **24**(2):302-314.
31. Smith MA, Green DM: **Phylogeography of *Bufo fowleri* at its northern range limit**. *Molecular Ecology* 2004, **13**(12):3723-3733.
32. Funk DJ, Omland KE: **Species-level paraphyly and polyphyly: Frequency, causes, and consequences, with insights from animal mitochondrial DNA**. *Annu Rev Ecol Evol S* 2003, **34**:397-423.
33. Wake DB: **Problems with species: Patterns and processes of species formation in salamanders**. *Annals of the Missouri Botanical Garden* 2006, **93**(1):8-23.
34. Jehle R, Burke T, Arntzen JW: **Delineating fine-scale genetic units in amphibians: Probing the primacy of ponds**. *Conservation Genetics* 2005, **6**(2):227-234.
35. Spear SF, Peterson CR, Matocq MD, Storfer A: **Landscape genetics of the blotched tiger salamander (Ambystoma tigrinum melanostictum)**. *Molecular Ecology* 2005, **14**(8):2553-2564.

36. Pritchard JK, Stephens M, Donnelly P: **Inference of population structure using multilocus genotype data**. *Genetics* 2000, **155**(2):945-959.
37. Waples RS, Gaggiotti O: **What is a population? An empirical evaluation of some genetic methods for identifying the number of gene pools and their degree of connectivity**. *Molecular Ecology* 2006, **15**(6):1419-1439.
38. Rowe G, Beebee TJC: **Defining population boundaries: use of three Bayesian approaches with microsatellite data from British natterjack toads (Bufo calamita)**. *Molecular Ecology* 2007, **16**(4):785-796.
39. Rosenberg NA, Burke T, Elo K, Feldmann MW, Freidlin PJ, Groenen MAM, Hillel J, Maki-Tanila A, Tixier-Boichard M, Vignal A *et al*: **Empirical evaluation of genetic clustering methods using multilocus genotypes from 20 chicken breeds**. *Genetics* 2001, **159**(2):699-713.
40. Crandall KA, Bininda-Emonds ORP, Mace GM, Wayne RK: **Considering evolutionary processes in conservation biology**. *Trends in Ecology & Evolution* 2000, **15**(7):290-295.
41. Fraser DJ, Bernatchez L: **Adaptive evolutionary conservation: towards a unified concept for defining conservation units**. *Molecular Ecology* 2001, **10**(12):2741-2752.
42. Haig SM, Beever EA, Chambers SM, Draheim HM, Dugger BD, Dunham S, Elliott-Smith E, Fontaine JB, Kesler DC, Knaus BJ *et al*: **Taxonomic considerations in listing subspecies under the US Endangered Species Act**. *Conservation Biology* 2006, **20**(6):1584-1594.
43. Thompson JD, Gibson TJ, Plewniak F, Jeanmougin F, Higgins DG: **The CLUSTAL-X windows interface: Flexible strategies for multiple sequence alignment aided by quality analysis tools**. *Nucleic Acids Research* 1997, **25**(24):4876-4882.
44. Swofford DL: **PAUP*. Phylogenetic analysis using parsimony (*and other methods). Version 4.** In., 4.0b10 edn. Sutherland, MA: Sinauer Associates; 2003.
45. Felsenstein J: **Confidence limits on phylogenies: an approach using the bootstrap**. *Evolution* 1985, **39**:783-791.
46. Bremer K: **Branch support and tree stability**. *Cladistics* 1994, **10**:295-304.
47. Maddison DR, Maddison WP: **MacClade 4: Analysis of phylogeny and character evolution**. In., 4.02 edn. Sunderland, Massachusetts: Sinauer Associates; 2001.
48. Hillis DM, Bull JJ: **An empirical-test of bootstrapping as a method for assessing confidence in phylogenetic analysis**. *Systematic Biology* 1993, **42**(2):182-192.
49. Huelsenbeck JP, Ronquist F: **MRBAYES: Bayesian inference of phylogenetic trees**. *Bioinformatics* 2001, **17**(8):754-755.
50. Alfaro ME, Zoller S, Lutzoni F: **Bayes or bootstrap? A simulation study comparing the performance of Bayesian Markov chain Monte Carlo sampling and bootstrapping in assessing phylogenetic confidence**. *Molecular Biology and Evolution* 2003, **20**(2):255-266.
51. Clement M, Posada D, Crandall KA: **TCS: a computer program to estimate gene genealogies**. *Molecular Ecology* 2000, **9**(10):1657-1659.

52. Crandall KA, Templeton AR, Sing CF: **Intraspecific cladogram estimation: problems and solutions**. In: *Models in Phylogeny Reconstruction.* Edited by Scotland RW, Siebert DJ, Williams DM. Oxford: Clarendon Press; 1994: 273-297.
53. Templeton AR, Crandall KA, Sing CF: **A cladistic analysis of phenotypic associations with haplotypes inferred from restriction endonuclease mapping and DNA sequence data: III Cladogram estimation**. *Genetics* 1992, **132**(2):619-633.
54. Crandall K, Templeton AR: **Empirical tests of some predictions from coalescent theory with applications to intraspecific phylogeny reconstruction**. *Genetics* 1993, **134**(3):959-969.
55. Templeton AR, Boerwinkle E, Sing CF: **A cladistic analysis of phenotypic associations with haplotypes inferred from restriction endonuclease mapping. I. Basic theory and an analysis of alcohol dehydrogenase activity in *Drosophila***. *Genetics* 1987, **117**(2):343-352.
56. Templeton AR, Routman E, Phillips CA: **Separating population structure from population history a cladistic analysis of the geographical distribution of mitochondrial DNA haplotypes in the tiger salamander*, Ambystoma tigrinum***. *Genetics* 1995, **140**(2):767-782.
57. Templeton AR, Sing CF: **A cladistic analysis of phenotypic associations with haplotypes inferred from restriction endonuclease mapping: IV Nested analyses with cladogram uncertainty and recombination**. *Genetics* 1993, **134**(2):659-669.
58. Beaumont MA, Panchal M: **On the validity of nested clade phylogeographical analysis**. *Molecular Ecology* 2008, **17**(11):2563-2565.
59. Knowles LL, Maddison WP: **Statistical phylogeography**. *Molecular Ecology* 2002, **11**(12):2623-2635.
60. Panchal M, Beaumont MA: **The automation and evaluation of nested clade phylogeographic analysis**. *Evolution* 2007, **61**(6):1466-1480.
61. Petit RJ: **The coup de grace for the nested clade phylogeographic analysis?** *Molecular Ecology* 2008, **17**(2):516-518.
62. Excoffier L, Laval G, Schneider S: **Arlequin ver. 3.0: An integrated software package for population genetics data analysis**. *Evolutionary Bioinformatics Online* 2005, **1**:47-50.
63. Simandle ET, Peacock MM, Zirelli L, Tracy CR: **Sixteen microsatellite loci for the Bufo boreas group**. *Molecular Ecology Notes* 2006, **6**(1):116-119.
64. Tikel D, Paetkau D, Cortinas MN, Leblois R, Moritz C, Estoup A: **Polymerase chain reaction primers for polymorphic microsatellite loci in the invasive toad species *Bufo marinus***. *Molecular Ecology* 2000, **9**(11):1927-1929.
65. Raymond M, Rousset F: **GENEPOP (version 3.1b): Population genetics software for exact tests and ecumencism**. *J Hered* 1997, **86**:248-249.
66. Rice WR: **Analyzing tables of statistical tests.** *Evolution* 1989, **43**:223-225.
67. Peakall R, Smouse PE: **genalex 6: genetic analysis in Excel. Population genetic software for teaching and research**. *Molecular Ecology Notes* 2006, **6**(1):288-295.

68. Schneider S, Roessli D, Excoffier L: ***Arlequin*, Version 2.0: A software for population genetics data analysis**. *University of Geneva, Switzerland* 2000.
69. Dieringer D, Schlotterer C: **microsatellite analyser (MSA): a platform independent analysis tool for large microsatellite data sets**. *Molecular Ecology Notes* 2003, **3**(1):167-169.
70. Felsenstein J: **PHYLIP -- Phylogeny Inference Package (Version 3.2)**. *Cladistics* 1989, **5**:164-166.
71. Miller MP: **Alleles In Space (AIS): Computer software for the joint analysis of interindividual spatial and genetic information**. *J Hered* 2005, **96**(6):722-724.
72. Rannala B, Mountain JL: **Detecting immigration by using multilocus genotypes**. *Proceedings of the National Academy of Sciences of the United States of America* 1997, **94**(17):9197-9201.
73. Cornuet JM, Piry S, Luikart G, Estoup A, Solignac M: **New methods employing multilocus genotypes to select or exclude populations as origins of individuals**. *Genetics* 1999, **153**(4):1989-2000.
74. Jakobsson M, Rosenberg NA: **CLUMPP: a cluster matching and permutation program for dealing with label switching and multimodality in analysis of population structure**. *Bioinformatics* 2007, **23**(14):1801-1806.
75. Rosenberg NA: **DISTRUCT: a program for the graphical display of population structure**. *Molecular Ecology Notes* 2004, **4**(1):137-138.

Figures

Figure 1 - Range map

Ranges of species within the *Anaxyrus boreas* species group and breeding population sampled for this study. The inset map shows the entire range of the *A. boreas* species group. Shape files for the species ranges were obtained from NatureServe (http://www.natureserve.org).

Figure 2 - Haplotype network and nesting

Four unconnected haplotype networks resulted from the statistical parsimony networking analysis of the mitochondrial control region data using TCS. The haplotypes were nested to graphically depict the relative age of relationships within the haplotype network. All recovered haplotypes have an alphabetical code followed by the number of observed copies in parentheses. Inferred haplotypes are depicted by solid black circles. The maximum number of mutational steps at the 95% confidence limit was seven. One haplotype, BO, was not recovered in a network with any other haplotypes.

Figure 3 - Map of major clades

The distribution of major clades recovered from phylogenetic and networking analyses of the *Anaxyrus boreas* species group mitochondrial control region data. Clade boundaries are drawn around collection localities of included haplotypes. Clade 4-1, not shown, is the composite of clades 3-2, 3-3, and 3-4.

Figure 4 - Strict consensus tree

Strict consensus of the 15 most parsimonious phylogenetic trees resulting from analysis of the *Anaxyrus boreas* species group mitochondrial control region sequence data. Major clades are boxed with hashed lines and labelled. Numbers above branches are bootstrap support and numbers below are Bremer support.

Figure 5 - Bayesian phylogram

Bayesian phylogram resulting from analysis of the *Anaxyrus boreas* species group mitochondrial control region sequence data. Major clades are boxed with hashed lines and labelled. Numbers above branches are posterior probabilities for nodes. Only posterior probabilities ≥ .95 are shown.

Figure 6 - Neighbour joining trees

Unrooted neighbour joining trees resulting from analysis of the *Anaxyrus boreas* species group microsatellite data using (A) chord distances and (B) Nei's D genetic distance. Numbers next to branches are bootstrap support for clustering of breeding populations. Branch lengths are proportional to genetic distances.

Figure 7 - Structure summary

Plots of the mean Ln P(D) of 10 replicates at each K from the STRUCTURE analyses of two microsatellite data sets. One data set included all species of the *Anaxyrus boreas* group, while the data set was limited to individuals of *A. boreas*. Vertical bars are the standard deviation of Ln P(D) at each K.

Figure 8 - Structure means

Bar plots of the mean assignment of individuals to clusters at optimal K for two STRUCTURE analyses. The first bar plot (A) is the mean assignment of individuals to 17 clusters resulting from ten permuted replicates of a data set consisting of all species of the *Anaxyrus boreas* group. The second bar plot (B) is the mean assignment of individuals to 13 clusters resulting from ten permuted replicates of a data set consisting of only *A. boreas* individuals.

Figure 9 - K=17

Bar plots of ten replicate at K=17 resulting from the analysis of the microsatellite data set consisting of all species of the *Anaxyrus boreas* group.

Figure 10 - K=13
Bar plots of ten replicates at K=13 resulting from the analysis of the microsatellite data set consisting of only *A. boreas* individuals.

Figure 11 - Alleles in space
The Genetic Landscape Shape interpolation plot depicting patterns of genetic diversity across the landscape generated with the program Alleles in Space.

Tables

Table 1 - Haplotypes
Mitochonrial control region haplotypes recovered in populations of *Anaxyrus boreas*, *A. canorus*, *A. exsul* and *A. nelsoni*.

Table 2 - Diversity
Diversity indices and tests of neutrality for species and breeding populations of the *Anaxyrus boreas* species group.

Table 3 - AMOVA
Results of AMOVA conducted on the microsatellite DNA and mtDNA sequence data. All variance components were highly significant ($P < 0.001$).

Table 4 - Alleles
Nuber of individuals genotyped (N) and number of alleles (Na) per locus observed in each species of the *Anaxyrus boreas* group.

Table 5 - Microsatellite summary
Number of individuals genotyped, alleleic diversity (A), number of private alleles (PA), observed heterozygosity (H_o), expected heterozygosity (H_e), and F_{IS}.

Table 6 - F_{ST}/R_{ST}
Pairwise F_{ST} (above diagonal) and R_{ST} (below diagonal) values derived from microsatellite genotype data. Values significantly different from zero ($P < 0.05$) are in bold.

Table 7 - Assignments

Assignment of individuals to population using maximum likelihood methods implemented by GENECLASS 2. The numbers within the main portion of the matrix are the number of individuals assigned to a particular population.

Table 8 - Collections

Collection information for specimens used in this study.

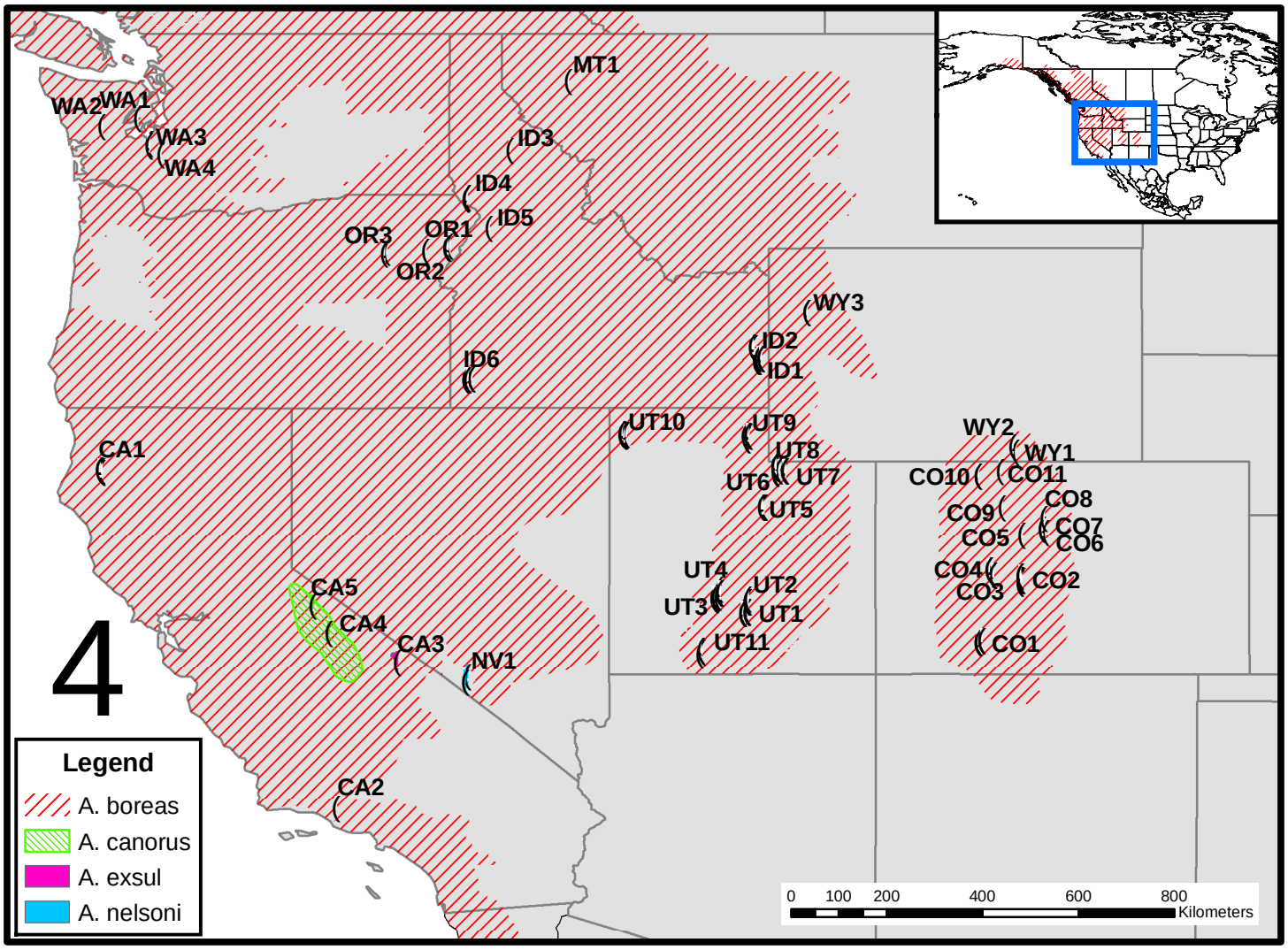
4
MT1
WA2
WA1
WA3
WA4
ID3
ID4
ID5
OR3
OR1
OR2
WY3
ID2
ID1
ID6
UT10
UT9
UT8
UT6
UT7
UT5
CA1
WY2
WY1
CO10
CO11
CO8
CO9
CO7
CO5
CO6
CO4
CO3
CO2
CO1
UT4
UT2
UT3
UT1
UT11
CA5
CA4
CA3
NV1
CA2
Legend
A. boreas
A. canorus
A. exsul
A. nelsoni
0
100
200
400
600
800
Kilometers

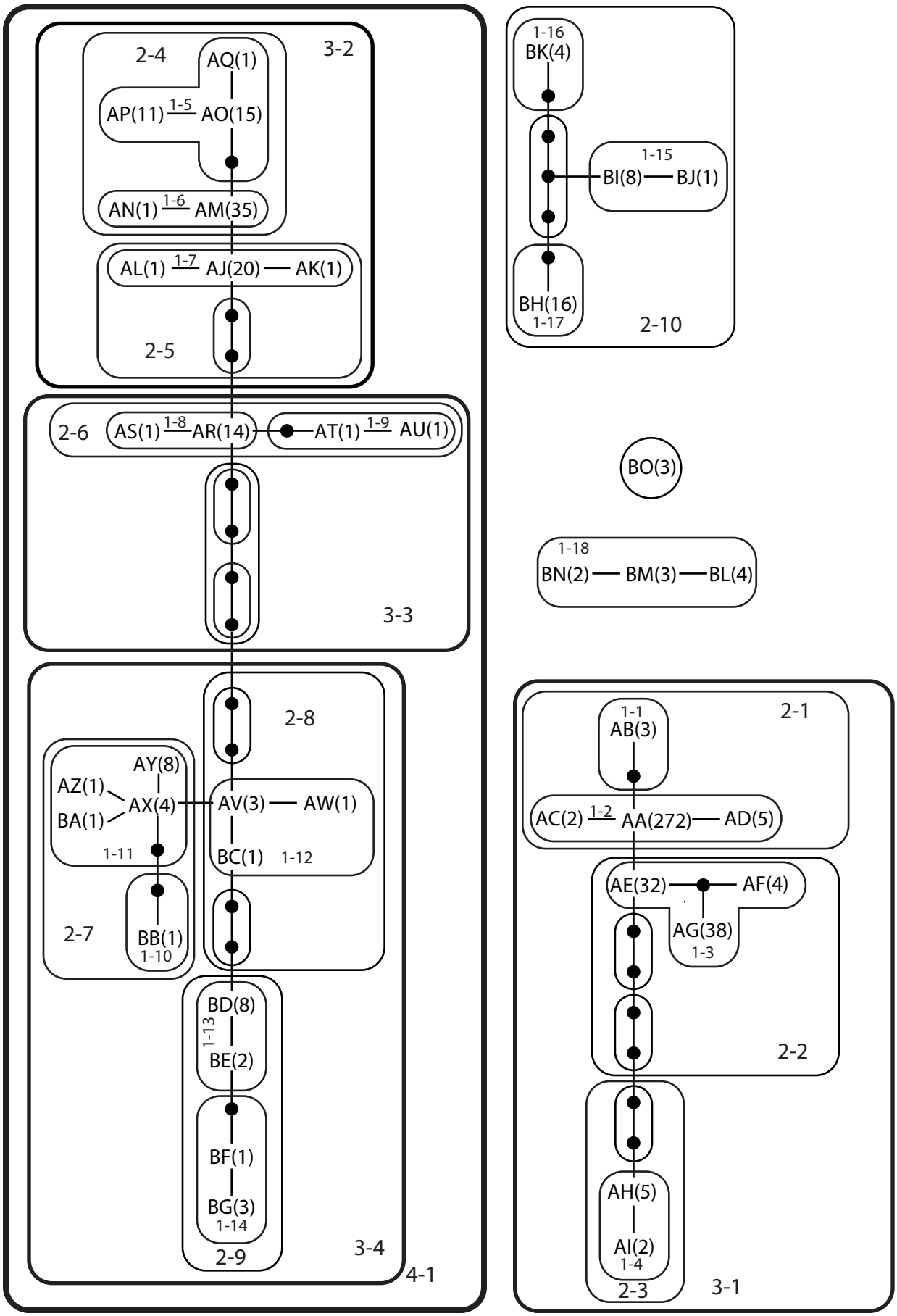
2-4
AQ(1)
3-2
AP(11)
1-5
AO(15)
AN(1)
1-6
AM(35)
AL(1)
1-7
AJ(20)
AK(1)
2-5
2-6
AS(1)
1-8
AR(14)
AT(1)
1-9
AU(1)
3-3
2-8
AY(8)
AZ(1)
AX(4)
BA(1)
1-11
AV(3)
AW(1)
BC(1)
1-12
2-7
BB(1)
1-10
BD(8)
1-13
BE(2)
BF(1)
BG(3)
1-14
2-9
3-4
4-1
1-16
BK(4)
1-15
BI(8)
BJ(1)
BH(16)
1-17
2-10
BO(3)
1-18
BN(2)
BM(3)
BL(4)
2-1
1-1
AB(3)
AC(2)
1-2
AA(272)
AD(5)
AE(32)
AF(4)
AG(38)
1-3
2-2
AH(5)
AI(2)
1-4
2-3
3-1

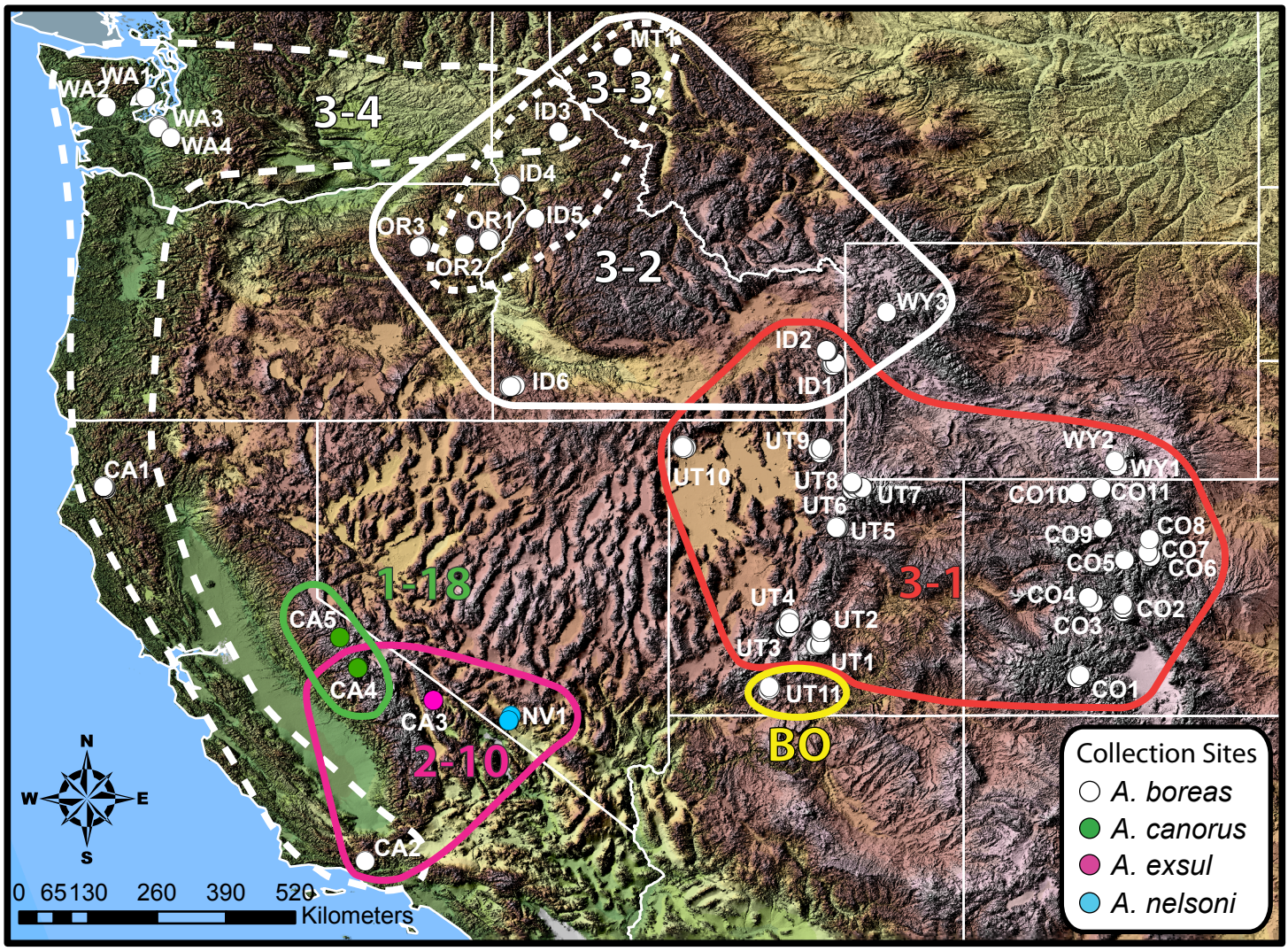
3-4
3-3
3-2
3-1
1-18
2-10
BO
MT1
WA1
WA2
WA3
WA4
ID1
ID2
ID3
ID4
ID5
ID6
OR1
OR2
OR3
WY1
WY2
WY3
CA1
CA2
CA3
CA4
CA5
NV1
UT1
UT2
UT3
UT4
UT5
UT6
UT7
UT8
UT9
UT10
UT11
CO1
CO2
CO3
CO4
CO5
CO6
CO7
CO8
CO9
CO10
CO11
N
S
E
W
0 65 130 260 390 520
Kilometers
Collection Sites
A. boreas
A. canorus
A. exsul
A. nelsoni

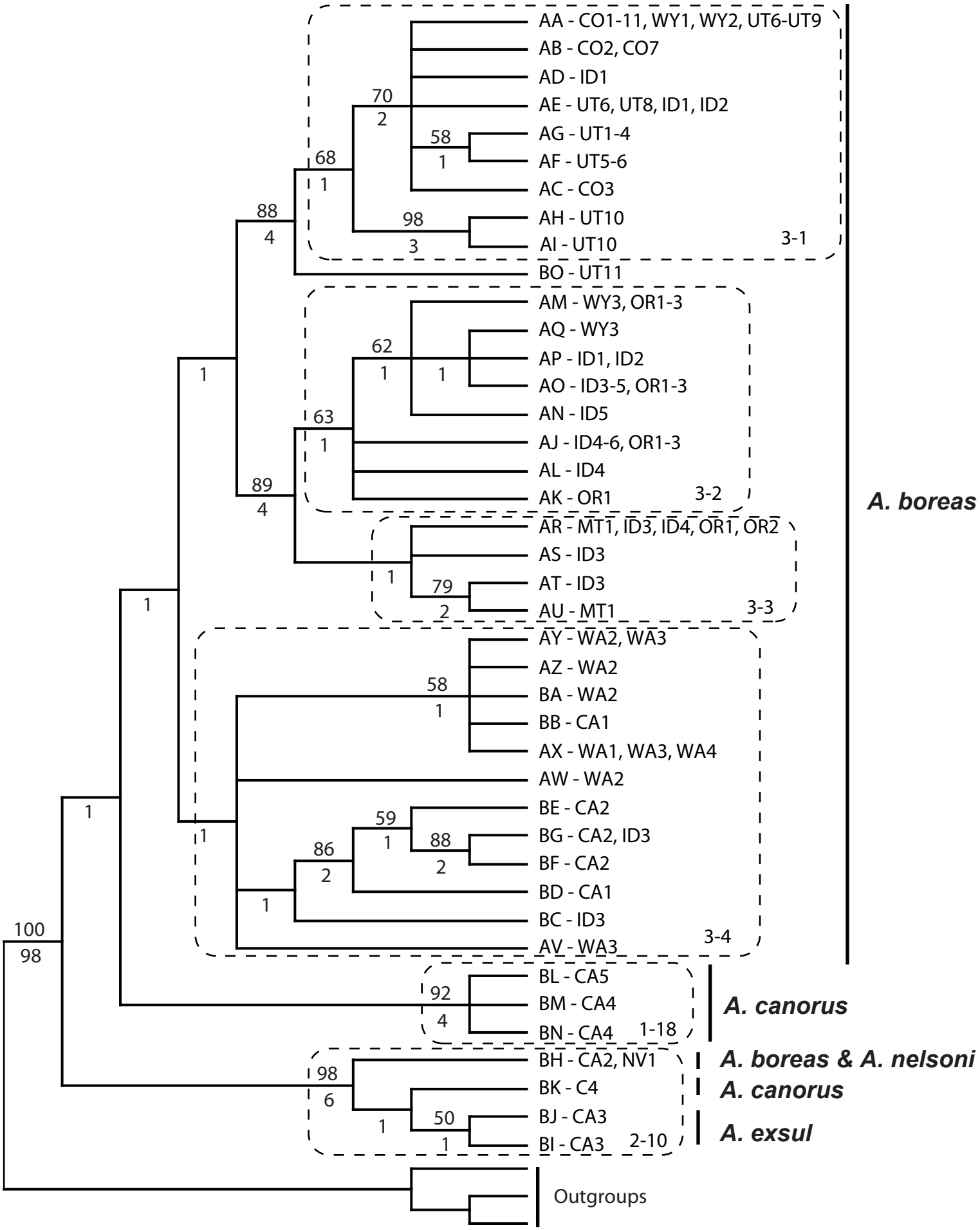
AA - CO1-11, WY1, WY2, UT6-UT9
AB - CO2, CO7
AD - ID1
AE - UT6, UT8, ID1, ID2
AG - UT1-4
AF - UT5-6
AC - CO3
AH - UT10
AI - UT10
3-1
BO - UT11
AM - WY3, OR1-3
AQ - WY3
AP - ID1, ID2
AO - ID3-5, OR1-3
AN - ID5
AJ - ID4-6, OR1-3
AL - ID4
AK - OR1
3-2
A. boreas
AR - MT1, ID3, ID4, OR1, OR2
AS - ID3
AT - ID3
AU - MT1
3-3
AY - WA2, WA3
AZ - WA2
BA - WA2
BB - CA1
AX - WA1, WA3, WA4
AW - WA2
BE - CA2
BG - CA2, ID3
BF - CA2
BD - CA1
BC - ID3
AV - WA3
3-4
BL - CA5
BM - CA4
BN - CA4
1-18
A. canorus
BH - CA2, NV1
BK - C4
BJ - CA3
BI - CA3
2-10
A. boreas & A. nelsoni
A. canorus
A. exsul
Outgroups

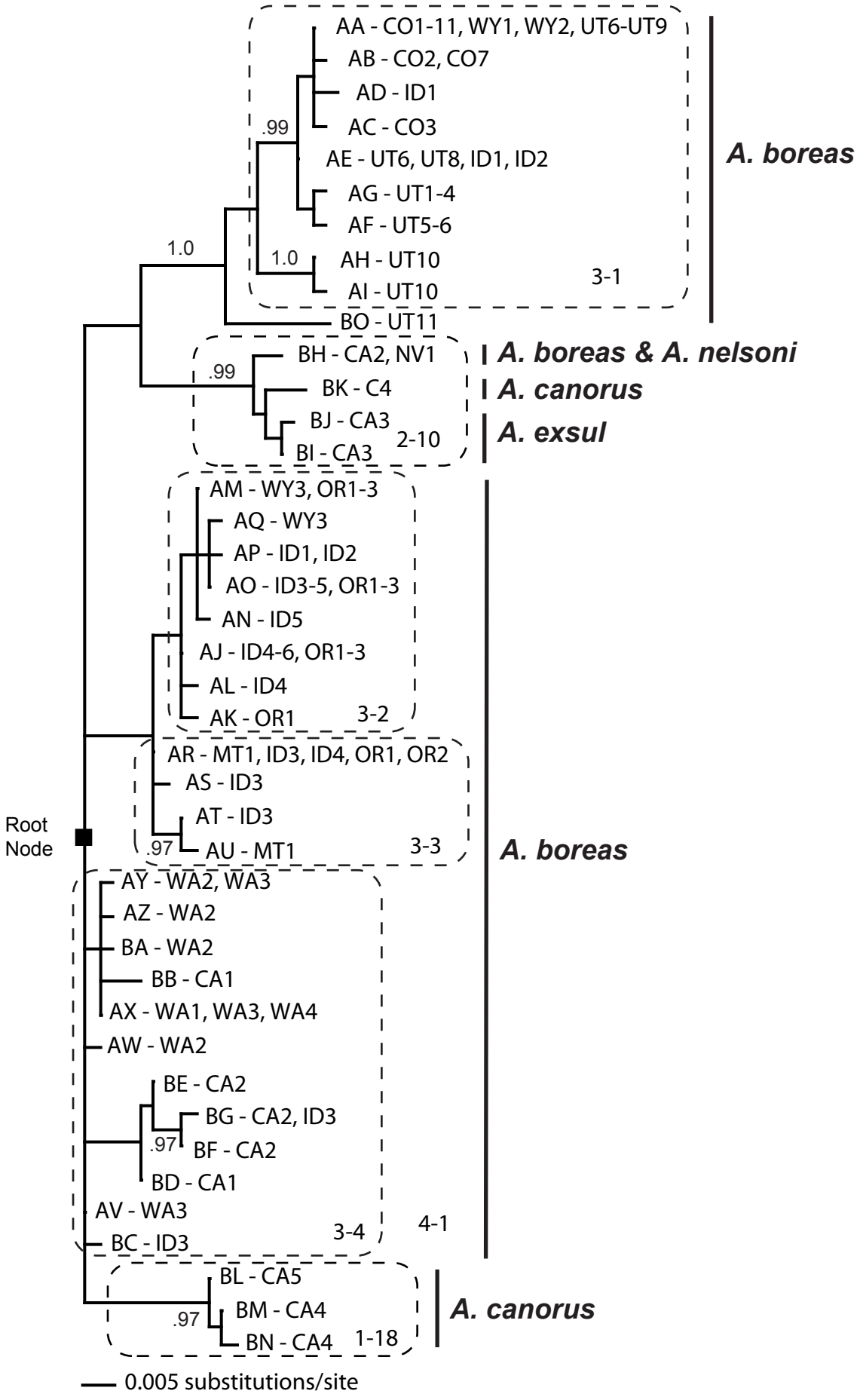
AA - CO1-11, WY1, WY2, UT6-UT9
AB - CO2, CO7
AD - ID1
AC - CO3
.99
AE - UT6, UT8, ID1, ID2
AG - UT1-4
AF - UT5-6
1.0
1.0
AH - UT10
AI - UT10
3-1
A. boreas
BO - UT11
BH - CA2, NV1
.99
BK - C4
BJ - CA3
BI - CA3
2-10
A. boreas & A. nelsoni
A. canorus
A. exsul
AM - WY3, OR1-3
AQ - WY3
AP - ID1, ID2
AO - ID3-5, OR1-3
AN - ID5
AJ - ID4-6, OR1-3
AL - ID4
AK - OR1
3-2
AR - MT1, ID3, ID4, OR1, OR2
AS - ID3
AT - ID3
.97
AU - MT1
3-3
Root
Node
A. boreas
AY - WA2, WA3
AZ - WA2
BA - WA2
BB - CA1
AX - WA1, WA3, WA4
AW - WA2
BE - CA2
BG - CA2, ID3
.97
BF - CA2
BD - CA1
AV - WA3
BC - ID3
3-4
4-1
BL - CA5
.97
BM - CA4
BN - CA4
1-18
A. canorus
0.005 substitutions/site

A

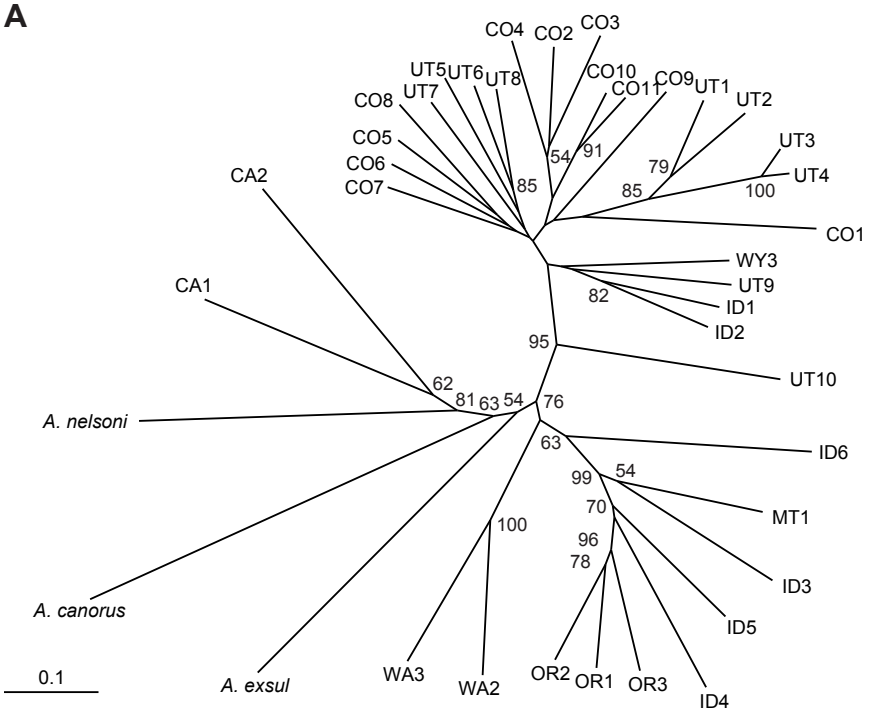
CO4
CO2
CO3
UT5
UT6
UT8
CO10
CO11
CO9
UT1
UT2
CO8
UT7
CO5
CO6
CO7
54
91
79
85
85
100
UT3
UT4
CO1
CA2
WY3
UT9
ID1
ID2
82
CA1
95
UT10
62
81
63
54
76
A. nelsoni
63
ID6
99
54
70
MT1
100
96
78
ID3
ID5
A. canorus
0.1
A. exsul
WA3
WA2
OR2
OR1
OR3
ID4

B

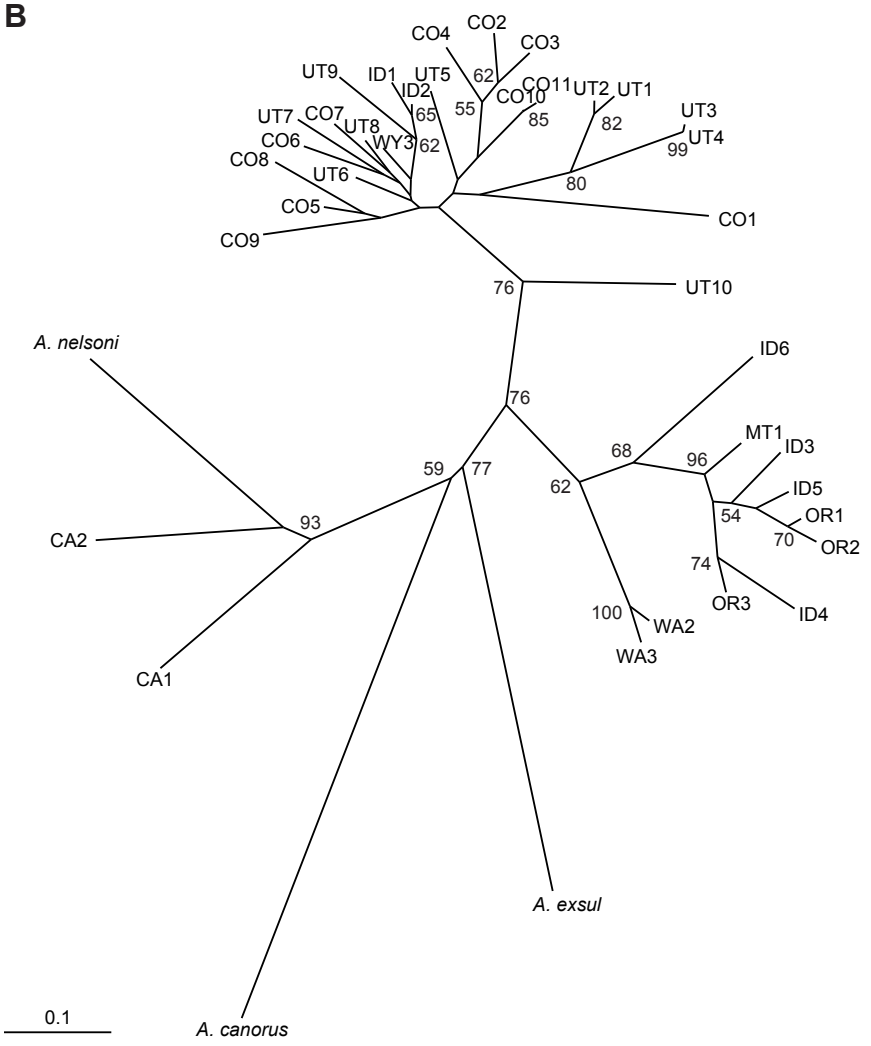
CO4
CO2
CO3
UT9
ID1
UT5
62
ID2
CO11
UT2
UT1
CO10
55
65
85
82
UT7
CO7
UT8
WY3
62
UT3
CO6
UT4
99
CO8
UT6
80
CO5
CO1
CO9
76
UT10
A. nelsoni
ID6
76
MT1
68
96
ID3
59
77
62
ID5
54
OR1
93
70
OR2
CA2
74
OR3
ID4
100
WA2
WA3
CA1
A. exsul
0.1
A. canorus

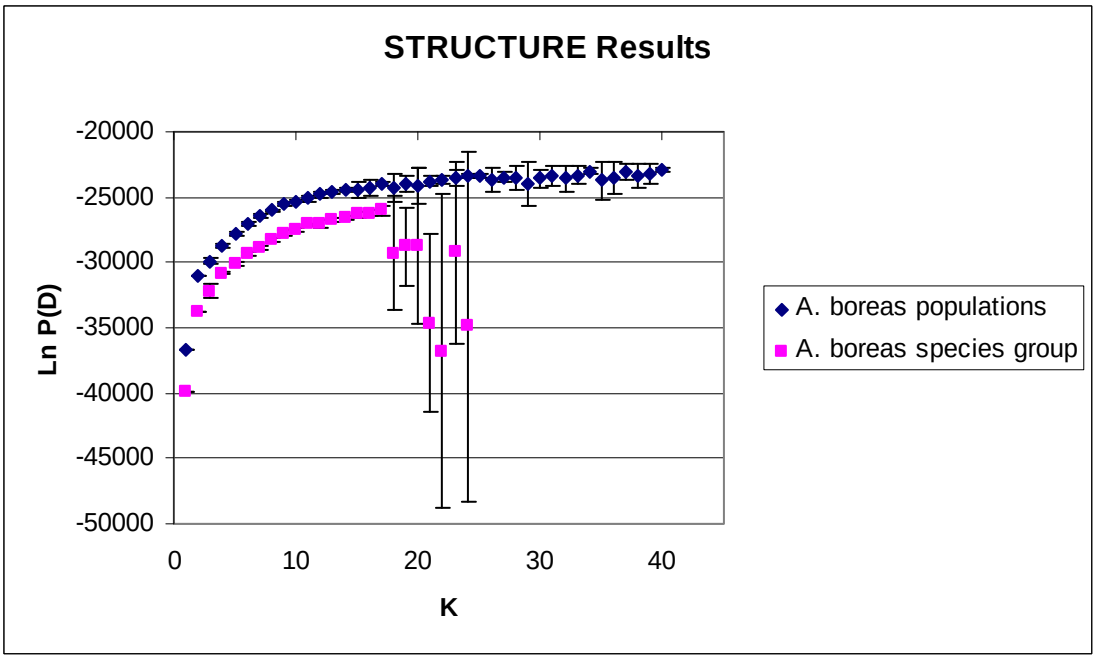
STRUCTURE Results
-20000
-25000
-30000
-35000
-40000
-45000
-50000
Ln P(D)
0
10
20
30
40
K
A. boreas populations
A. boreas species group

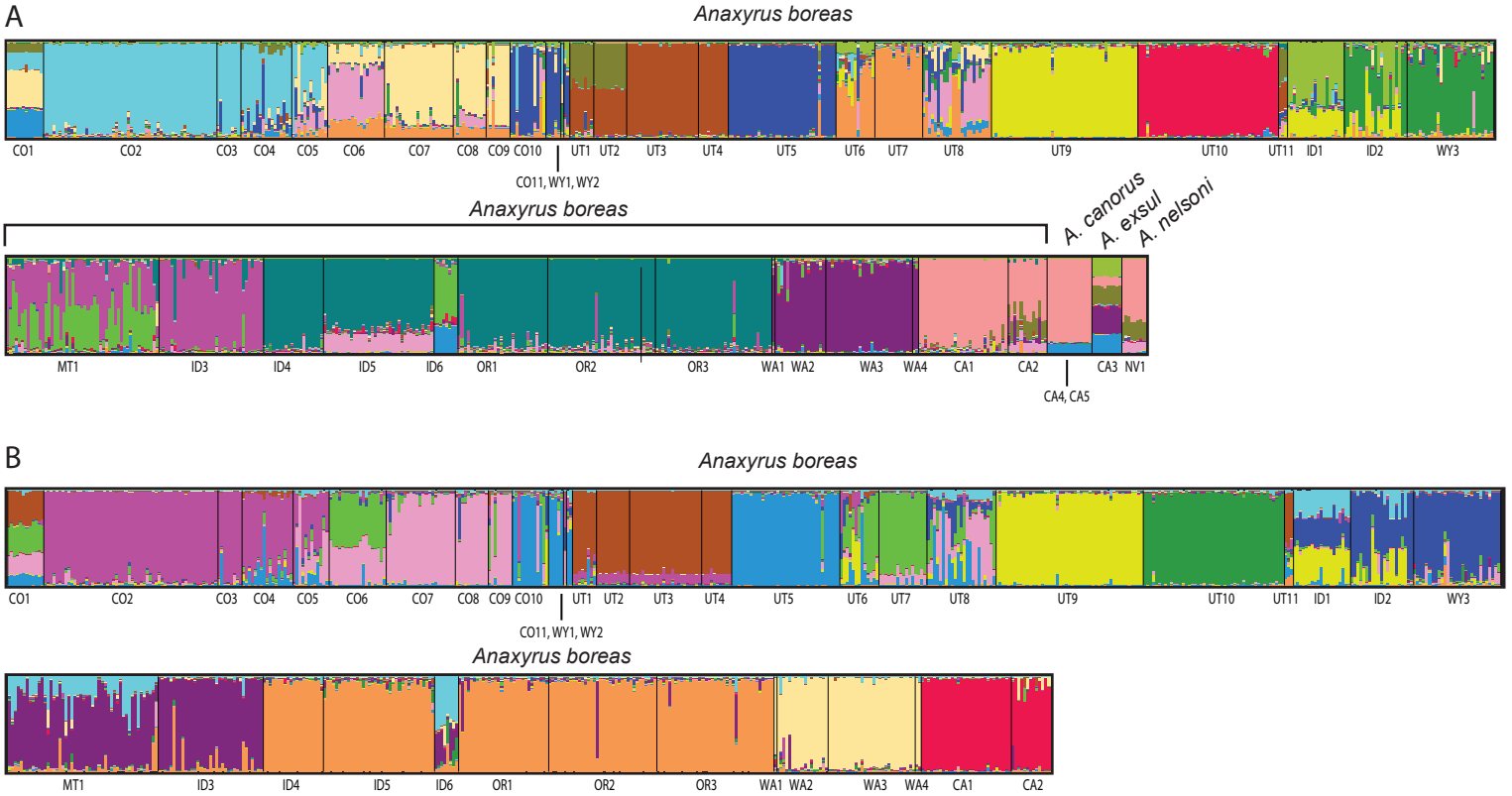
A
Anaxyrus boreas
CO1
CO2
CO3
CO4
CO5
CO6
CO7
CO8
CO9
CO10
CO11, WY1, WY2
UT1
UT2
UT3
UT4
UT5
UT6
UT7
UT8
UT9
UT10
UT11
ID1
ID2
WY3
Anaxyrus boreas
A. canorus
A. exsul
A. nelsoni
MT1
ID3
ID4
ID5
ID6
OR1
OR2
OR3
WA1
WA2
WA3
WA4
CA1
CA2
CA3
NV1
CA4, CA5
B
Anaxyrus boreas
CO1
CO2
CO3
CO4
CO5
CO6
CO7
CO8
CO9
CO10
CO11, WY1, WY2
UT1
UT2
UT3
UT4
UT5
UT6
UT7
UT8
UT9
UT10
UT11
ID1
ID2
WY3
Anaxyrus boreas
MT1
ID3
ID4
ID5
ID6
OR1
OR2
OR3
WA1
WA2
WA3
WA4
CA1
CA2

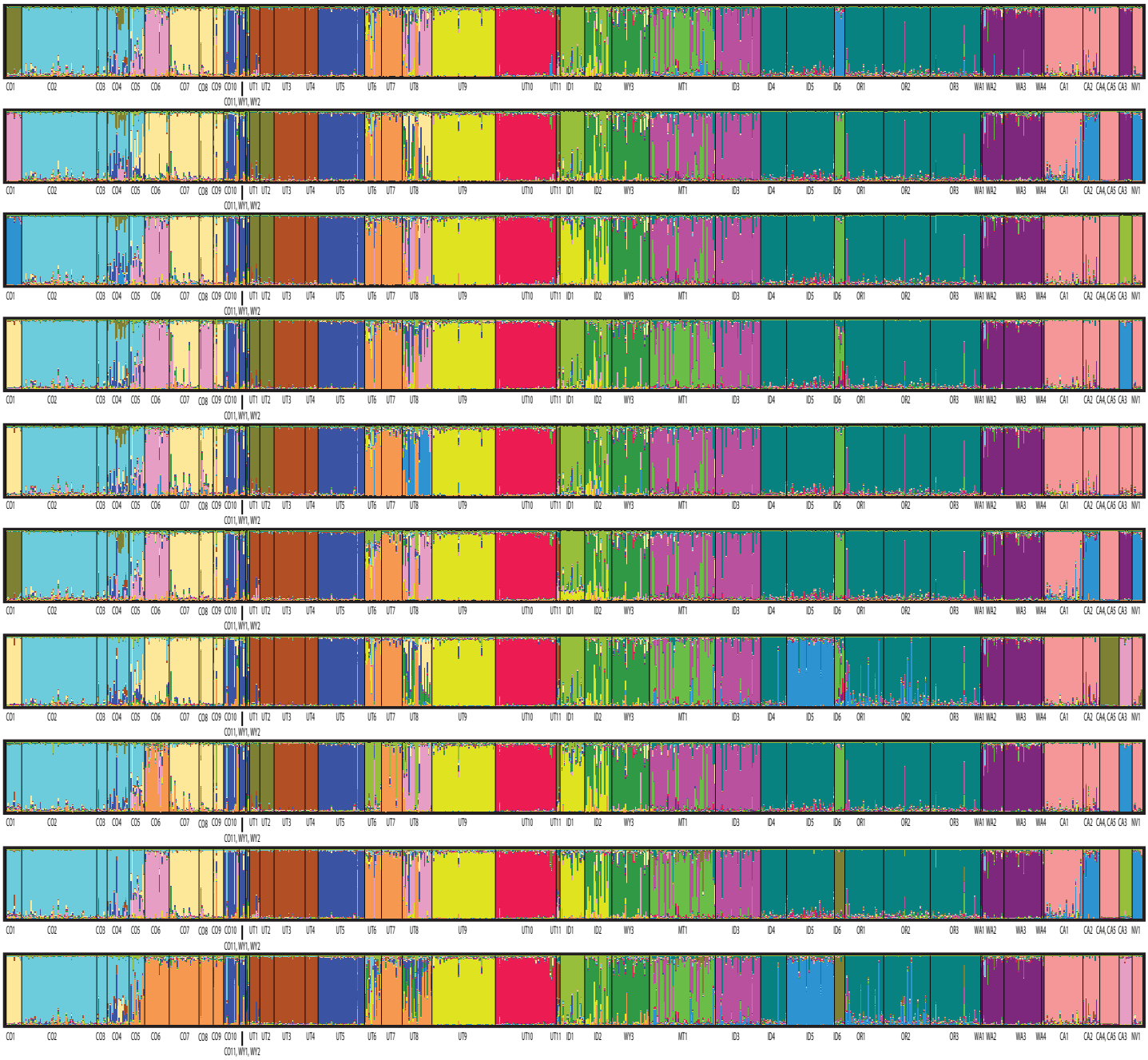
CO1 CO2 CO3 CO4 CO5 CO6 CO7 CO8 CO9 CO10 UT1 UT2 UT3 UT4 UT5 UT6 UT7 UT8 UT9 UT10 UT11 ID1 ID2 WY3 MT1 ID3 ID4 ID5 ID6 OR1 OR2 OR3 WA1 WA2 WA3 WA4 CA1 CA2 CA4, CA5 CA3 NV1
CO11, WY1, WY2

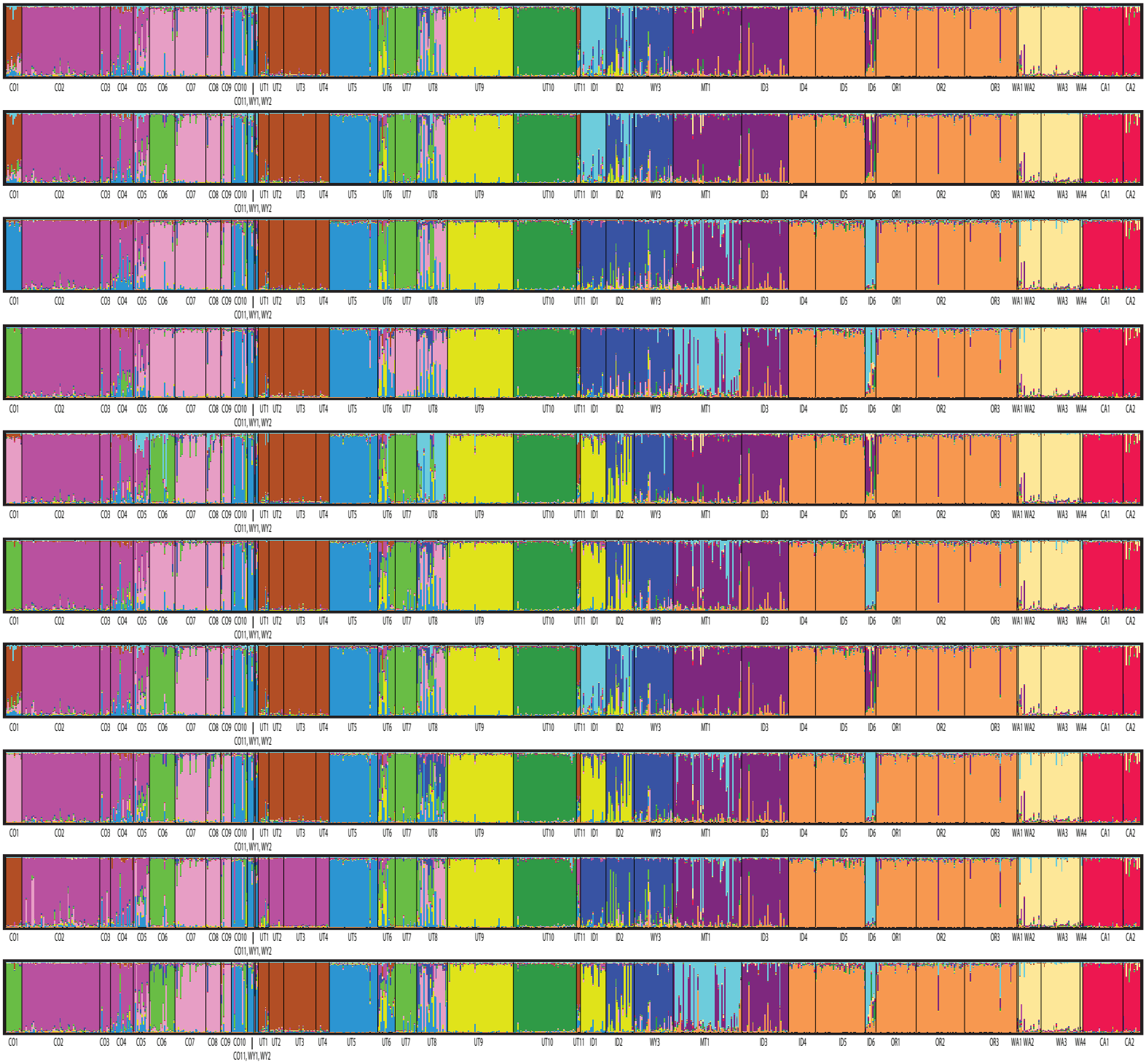
CO1 CO2 CO3 CO4 CO5 CO6 CO7 CO8 CO9 CO10 | UT1 UT2 UT3 UT4 UT5 UT6 UT7 UT8 UT9 UT10 UT11 ID1 ID2 WY3 MT1 ID3 ID4 ID5 ID6 OR1 OR2 OR3 WA1 WA2 WA3 WA4 CA1 CA2
CO11, WY1, WY2

A

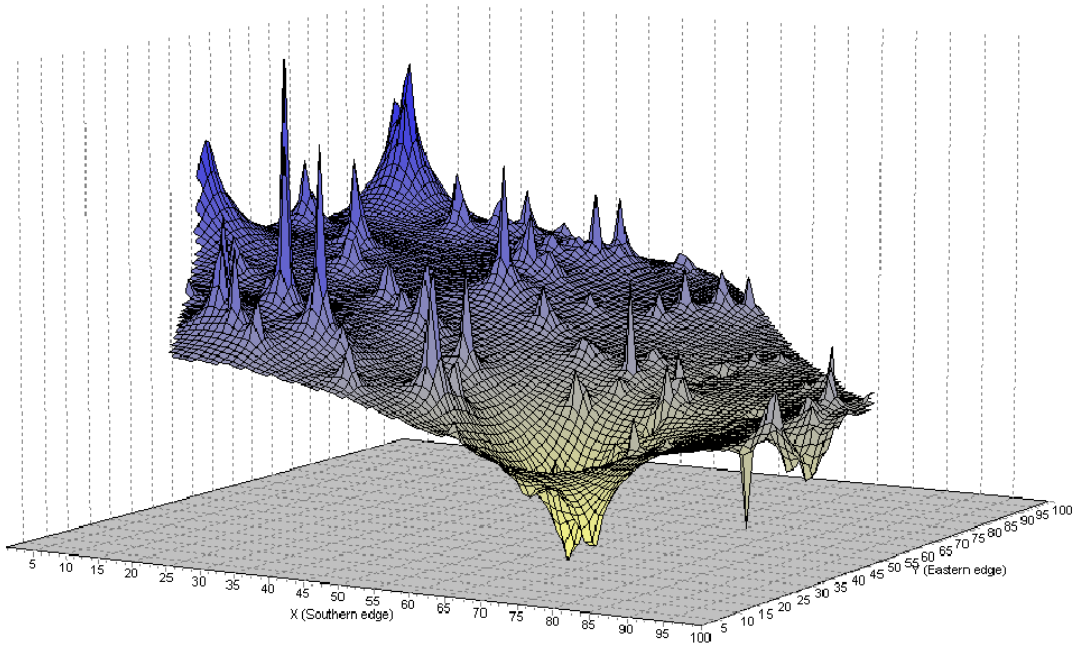
X (Southern edge)
Y (Eastern edge)

B

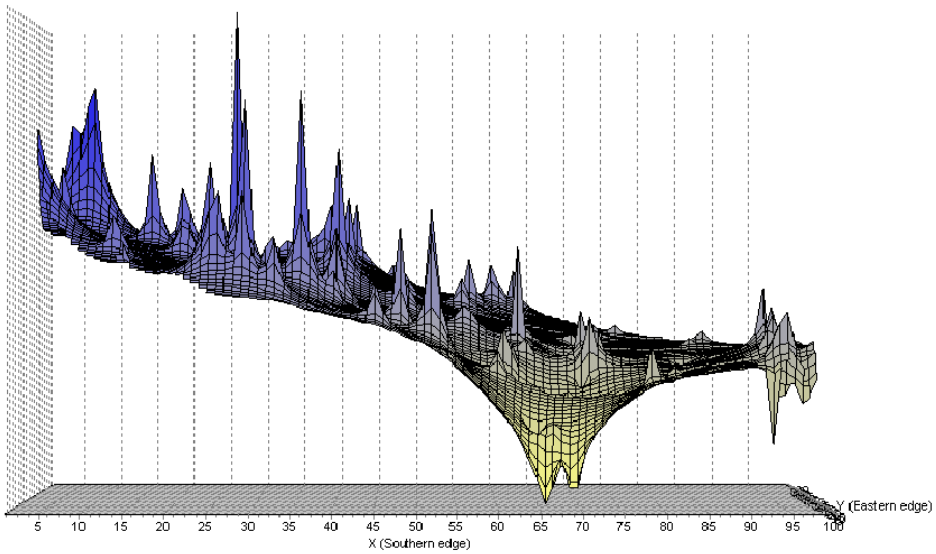
X (Southern edge)
Y (Eastern edge)

Table 1 Mitochondrial control region haplotypes recovered in populations of *Anaxyrus boreas, A. canorus, A. exsul* and A. *nelsoni*.

	Collection Sites																	
Haplotype	CO1	CO2	CO3	CO4	CO5	CO6	CO7	CO8	CO9	CO10	CO11	WY1	WY2	UT1	UT2	UT3	UT4	UT5
N	14	71	8	20	20	20	21	15	22	24	5	1	2	8	11	13	6	1
AA	14	70	6	20	20	20	19	15	22	24	5	1	2					
AB		1					2											
AC			2															
AD																		
AE																		
AF																		1
AG														8	11	13	6	
AH																		
AI																		
AJ																		
AK																		
AL																		
AM																		
AN																		
AO																		
AP																		
AQ																		
AR																		
AS																		
AT																		
AU																		
AV																		
AW																		
AX																		
AY																		
AZ																		
BA																		
BB																		
BC																		
BD																		
BE																		
BF																		
BG																		
BH																		
BI																		
BJ																		
BK																		
BL																		
BM																		
BN																		
BO																		

Table 1 *continued*

	Collection Sites																	
Haplotype	UT6	UT7	UT8	UT9	UT10	UT11	ID1	ID2	WY3	MT1	ID3	ID4	ID5	ID6	OR1	OR2	OR3	WA1
N	6	10	4	20	7	3	21	24	28	5	7	8	8	10	13	8	6	1
AA	2	10	2	20														
AB																		
AC																		
AD							5											
AE	1		2				10	19										
AF	3																	
AG																		
AH					5													
AI					2													
AJ												1	3	10	1	2	3	
AK															1			
AL												1						
AM									27						5	1	2	
AN													1					
AO											1	4	4		2	3	1	
AP							6	5										
AQ									1									
AR										4	2	2			4	2		
AS											1							
AT											1							
AU										1								
AV																		
AW																		
AX																		1
AY																		
AZ																		
BA																		
BB																		
BC											1							
BD																		
BE																		
BF																		
BG											1							
BH																		
BI																		
BJ																		
BK																		
BL																		
BM																		
BN																		
BO						3												

Table 1 *continued*

	Collection Sites									
Haplotype	WA2	WA3	WA4	CA1	CA2	NV1	CA3	CA4	CA5	Total
N	8	8	1	9	13	8	9	9	4	540
AA										272
AB										3
AC										2
AD										5
AE										32
AF										4
AG										38
AH										5
AI										2
AJ										20
AK										1
AL										1
AM										35
AN										1
AO										15
AP										11
AQ										1
AR										14
AS										1
AT										1
AU										1
AV		3								3
AW	1									1
AX		2	1							4
AY	5	3								8
AZ	1									1
BA	1									1
BB				1						1
BC										1
BD				8						8
BE					2					2
BF					1					1
BG					2					3
BH					8	8				16
BI							8			8
BJ							1			1
BK								4		4
BL									4	4
BM								3		3
BN								2		2
BO										3

Table 2 Diversity indices and tests of neutrality for species and breeding populations in the *Anaxyrus boreas* species group.

Species & Breeding Population	n	h	Haplotype Diversity	Nucleotide Diversity (π %)	Tajima's D	Fu's Fs
A. boreas	479	35	0.663 ± 0.024	1.9437 ± 0.9916	0.266 (NS)	0.651 (NS)
CO1	14	1	-	-	-	-
CO2	71	2	0.028 ± 0.027	0.000061 ± 0.000214	-1.066 (NS)	-1.930*
CO3	8	2	0.429 ± 0.169	0.000924 ± 0.001052	0.334 (NS)	0.536 (NS)
CO4	20	1	-	-	-	-
CO5	20	1	-	-	-	-
CO6	20	1	-	-	-	-
CO7	21	2	0.181 ± 0.104	0.000390 ± 0.000588	-0.618 (NS)	-0.137 (NS)
CO8	15	1	-	-	-	-
CO9	22	1	-	-	-	-
CO10	24	1	-	-	-	-
CO11	5	1	-	-	-	-
WY1	1	1	-	-	-	-
WY2	1	1	-	-	-	-
UT1	8	1	-	-	-	-
UT2	11	1	-	-	-	-
UT3	13	1	-	-	-	-
UT4	6	1	-	-	-	-
UT5	1	1	-	-	-	-
UT6	6	3	0.733 ± 0.155	0.003736 ± 0.002900	1.648 (NS)	0.759 (NS)
UT7	10	1	-	-	-	-
UT8	4	2	0.667 ± 0.204	0.001437 ± 0.001612	1.633 (NS)	0.540 (NS)
UT9	20	1	-	-	-	-
UT10	7	2	0.476 ± 0.171	0.001026 ± 0.001145	0.559 (NS)	0.589 (NS)
UT11	3	1	-	-	-	-
ID1	21	3	0.667 ± 0.057	0.020628 ± 0.011000	2.137 (NS)	13.188 (NS)
ID2	19	1	-	-	-	-
WY3	28	2	0.071 ± 0.065	0.000462 ± 0.000638	-1.511*	0.204 (NS)
MT1	5	2	0.400 ± 0.237	0.002592 ± 0.002294	-1.048 (NS)	1.688 (NS)
ID3	7	6	0.952 ± 0.096	0.016626 ± 0.010110	-0.717 (NS)	-0.309 (NS)
ID4	8	4	0.750 ± 0.139	0.005773 ± 0.003905	0.756 (NS)	0.759 (NS)
ID5	8	3	0.679 ± 0.122	0.004156 ± 0.002997	0.712 (NS)	1.493 (NS)
ID6	10	1	-	-	-	-
OR1	13	5	0.782 ± 0.079	0.005250 ± 0.003415	0.633 (NS)	0.421 (NS)
OR2	8	4	0.821 ± 0.101	0.005388 ± 0.003690	1.192 (NS)	0.613 (NS)
OR3	6	3	0.733 ± 0.155	0.002730 ± 0.002287	0.311 (NS)	0.209 (NS)
WA1	1	1	-	-	-	-
WA2	8	4	0.643 ± 0.184	0.003317 ± 0.002519	-0.923 (NS)	-0.375 (NS)
WA3	8	3	0.750 ± 0.097	0.002314 ± 0.001933	1.449 (NS)	0.330 (NS)
WA4	1	1	-	-	-	-
CA1	9	2	0.222 ± 0.166	0.003360 ± 0.002503	-1.767*	3.095 (NS)
CA2	13	4	0.615 ± 0.136	0.021100 ± 0.011621	2.206 (NS)	7.171 (NS)

Table 2 *continued*

Species & Breeding Population	n	h	Haplotype Diversity	Nucleotide Diversity (π %)	Tajima's D	Fu's Fs
A. canorus	13	4	0.795 ± 0.059	2.3870 ± 1.3045	1.912 (NS)	7.940 (NS)
CA4	9	3	0.722 ± 0.097		2.487 (NS)	8.521 (NS)
CA5	4	1	-	-	-	-
A. exsul						
CA3	9	2	0.222 ± 0.166	0.0481 ± 0.0706	-1.088 (NS)	-0.263 (NS)
A. nelsoni						
NV1	8	1	-	-	-	-

* P < 0.05
** P < 0.01
*** P < 0.001
NS = P > 0.05

Table 3 Results of AMOVA conducted on the microsatellite DNA and mtDNA sequence data. All variance components were highly significant (P < 0.001).

Comparison	Loci		Statistic	Value	%	Statistic	Value	%
Clade 3-1	**Microsatellites**	Among Regions	R_{CT} =	0.270	27%	F_{CT} =	0.057	6%
Regions:		Among Populations Within Regions	R_{SC} =	0.359	26%	F_{SC} =	0.321	30%
1) SRMP								
2) all UT, ID1 and ID2 pops								
		Within Populations	R_{ST} =	0.532	47%	F_{ST} =	0.359	64%
Clade 3-1	**Mitochondrial CR**	Among Regions	Φ_{CT} =	0.451	45%	F_{CT} =	0.507	51%
Regions:		Among Populations Within Regions	Φ_{SC} =	0.915	50%	F_{SC} =	0.752	37%
1) SRMP								
2) all UT pops								
		Within Populations	Φ_{ST} =	0.953	5%	F_{ST} =	0.878	12%
B. boreas	**Microsatellites**	Among Regions	R_{CT} =	0.216	22%	F_{CT} =	0.191	19%
Regions:		Among Populations Within Regions	R_{SC} =	0.334	26%	F_{SC} =	0.253	20%
1) Clades 4-1								
2) 3-1 excluding ID1&ID2								
		Within Populations	R_{ST} =	0.478	52%	F_{ST} =	0.396	60%
	Mitochondrial CR	Among Regions	Φ_{CT} =	0.827	83%	F_{CT} =	0.439	44%
		Among Populations Within Regions	Φ_{SC} =	0.770	13%	F_{SC} =	0.647	36%
		Within Populations	Φ_{ST} =	0.960	4%	F_{ST} =	0.802	20%

Table 3 *continued*

Comparison	Loci		Statistic	Value	%	Statistic	Value	%
All A. *boreas* populations	**Microsatellites**	Among Populations			41%			33%
		Within Populations	R_{ST} =	0.407	59%	F_{ST} =	0.332	67%
	Mitochondrial CR	Among Populations			88%			73%
		Within Populations	Φ_{ST} =	0.884	12%	F_{ST} =	0.734	27%
	Microsatellites	Among Species	R_{CT} =	0.436	44%	F_{CT} =	0.196	20%
Species: 1) A. *boreas* - pops 2) A. *canorus* 3) A. *exsul* 4) A. *nelsoni*		Among Populations Within Species	R_{SC} =	0.405	23%	F_{SC} =	0.331	27%
		Within Populations	R_{ST} =	0.664	34%	F_{ST} =	0.462	54%
	Mitochondrial CR	Among Species	Φ_{CT} =	0.526	53%	F_{CT} =	0.243	24%
		Among Populations Within Regions	Φ_{SC} =	0.868	41%	F_{SC} =	0.729	55%
		Within Populations	Φ_{ST} =	0.937	6%	F_{ST} =	0.795	21%

Table 4 Nuber of individuals genotyped (N) and number of alleles (Na) per locus observed in each species of the *Anaxyrus boreas* group.

	Anaxyrus boreas		*Anaxyrus canorus*		*Anaxyrus exsul*		*Anaxyrus nelsoni*	
Locus	N	Na	N	Na	N	Na	N	Na
Bbr4	843	16	15	10	10	4	8	3
Bbr17	852	10	15	4	10	2	8	2
Bbr4b	842	12	15	2	10	1	8	2
Bbr86	809	16	15	5	10	1	2	1
BM224	847	9	15	1	10	1	8	1
Bbr16	835	33	15	8	8	5	8	3
Bbr87b	805	29	15	10	10	5	6	4
Bbr201	810	26	15	9	10	2	8	7
Bbr293	838	17	14	7	9	3	8	3
Bbr233	833	7	15	2	10	2	8	2
Bbr281	851	16	15	3	10	3	8	3
Bbr292	848	22	15	5	10	5	8	5

Table 5 Number of individuals genotyped, alleleic diversity (A), number of private alleles (PA), observed heterozygosity (Ho), expected heterozygosity (He), and F_{IS}.

Species & Breeding Population	N	A	PA	Ho	He	F_{IS}
Anaxyrus boreas	836	17.75	62	0.504	0.742	0.344
CO1	12	1.75		0.160	0.150	-0.073
CO2	58	3.17		0.384	0.345	-0.100
CO3	8	2.08		0.271	0.287	0.113
CO4	17	2.67		0.341	0.322	-0.051
CO5	12	2.67		0.500	0.425	-0.183
CO6	19	2.17		0.307	0.298	-0.043
CO7	23	2.75		0.409	0.363	-0.092
CO8	11	2.00	1	0.386	0.303	-0.244
CO9	8	1.58		0.137	0.169	0.185
CO10	12	2.67		0.377	0.347	-0.067
CO11	5	1.75		0.317	0.245	-0.311
UT1	8	2.33		0.274	0.271	-0.006
UT2	11	1.75		0.295	0.209	-0.365
UT3	24	1.83		0.239	0.241	0.026
UT4	10	1.83		0.317	0.258	-0.224
UT5	36	2.58		0.443	0.396	-0.121
UT6	13	3.50		0.449	0.501	0.116
UT7	16	2.33		0.385	0.338	-0.148
UT8	23	3.75		0.486	0.478	-0.013
UT9	49	3.33		0.373	0.359	-0.041
UT10	47	3.58		0.514	0.532	0.075
ID1	19	3.50		0.490	0.430	-0.143
ID2	21	4.42		0.511	0.475	-0.091
WY3	29	5.83		0.574	0.512	-0.121
MT1	51	10.17	5	0.697	0.714	0.019
ID3	35	7.42	1	0.693	0.671	-0.028
ID4	20	4.83		0.649	0.623	-0.019
ID5	37	5.17		0.622	0.589	-0.058
ID6	8	3.25		0.511	0.477	-0.050
OR1	30	6.25		0.656	0.610	-0.072
OR2	36	6.83		0.636	0.625	-0.003
OR3	39	6.17		0.583	0.614	0.061
WA2	17	8.42	1	0.608	0.719	0.150
WA3	29	9.83	9	0.719	0.729	0.000
CA1	30	7.42	10	0.610	0.698	0.119
CA2	13	5.75	2	0.737	0.690	-0.082
Anaxyrus canorus	15	5.50	29	0.572	0.590	0.038
Anaxyrus exsul	10	2.83	2	0.336	0.377	0.096
Anaxyrus nelsoni	8	3.00	2	0.448	0.466	0.040

Table 6 Pairwise F_{ST} (above diagonal) and R_{ST} (below diagonal) values derived from microsatellite genotype data. Values significantly different from zero (P < 0.05) are in bold.

Anaxyrus boreas	CO1	CO2	CO3	CO4	CO5	CO6	CO7	CO8	CO9	CO10	CO11	UT1	UT2	UT3	UT4	UT5
CO1	-	**0.221**	**0.266**	**0.232**	**0.234**	**0.235**	**0.221**	**0.253**	**0.507**	**0.243**	**0.287**	**0.290**	**0.345**	**0.265**	**0.273**	**0.211**
CO2	**0.559**	-	**0.025**	**0.039**	**0.024**	**0.045**	**0.036**	**0.044**	**0.247**	**0.037**	**0.044**	**0.067**	**0.128**	**0.078**	**0.062**	**0.032**
CO3	**0.571**	-0.008	-	**0.034**	**0.019**	**0.040**	**0.030**	**0.038**	**0.304**	**0.028**	**0.043**	**0.067**	**0.137**	**0.077**	**0.058**	**0.018**
CO4	**0.565**	**0.294**	**0.285**	-	**0.015**	**0.031**	**0.023**	**0.033**	**0.263**	**0.025**	**0.035**	**0.057**	**0.121**	**0.068**	**0.049**	**0.021**
CO5	**0.673**	0.046	0.073	**0.239**	-	**0.023**	**0.013**	**0.019**	**0.267**	**0.013**	**0.021**	**0.048**	**0.115**	**0.059**	**0.040**	**0.010**
CO6	**0.840**	**0.244**	**0.276**	**0.621**	**0.308**	-	**0.029**	**0.039**	**0.263**	**0.020**	**0.041**	**0.054**	**0.127**	**0.073**	**0.055**	**0.029**
CO7	**0.197**	**0.482**	**0.460**	**0.412**	**0.539**	**0.730**	-	**0.027**	**0.250**	**0.022**	**0.031**	**0.053**	**0.116**	**0.063**	**0.045**	**0.019**
CO8	**0.254**	**0.274**	**0.173**	**0.330**	**0.316**	**0.538**	**0.117**	-	**0.287**	**0.028**	**0.042**	**0.062**	**0.132**	**0.075**	**0.056**	**0.029**
CO9	**0.619**	**0.501**	**0.453**	**0.166**	**0.414**	**0.764**	**0.382**	**0.329**	-	**0.276**	**0.334**	**0.324**	**0.383**	**0.295**	**0.309**	**0.240**
CO10	**0.744**	**0.112**	0.082	**0.429**	0.080	**0.115**	**0.648**	**0.400**	**0.609**	-	0.001	**0.055**	**0.124**	**0.068**	**0.049**	0.008
CO11	**0.847**	**0.196**	0.141	**0.555**	**0.235**	0.082	**0.694**	**0.420**	**0.690**	0.037	-	**0.063**	**0.144**	**0.080**	**0.060**	**0.028**
UT1	**0.754**	**0.335**	**0.383**	0.040	**0.239**	**0.734**	**0.504**	**0.408**	0.027	**0.507**	**0.726**	-	**0.034**	**0.100**	**0.082**	**0.052**
UT2	**0.771**	**0.429**	**0.505**	0.051	**0.433**	**0.827**	**0.482**	**0.446**	0.080	**0.662**	**0.860**	**0.103**	-	**0.161**	**0.150**	**0.113**
UT3	**0.854**	**0.425**	**0.572**	**0.229**	**0.378**	**0.776**	**0.720**	**0.663**	**0.472**	**0.588**	**0.791**	**0.251**	**0.454**	-	-0.015	**0.062**
UT4	**0.800**	**0.302**	**0.383**	0.066	**0.222**	**0.724**	**0.610**	**0.500**	**0.331**	**0.465**	**0.736**	**0.134**	**0.319**	0.055	-	**0.045**
UT5	**0.803**	**0.182**	**0.250**	**0.456**	**0.099**	**0.309**	**0.718**	**0.579**	**0.677**	0.049	**0.303**	**0.526**	**0.657**	**0.508**	**0.422**	-
UT6	**0.746**	**0.240**	**0.278**	**0.350**	**0.106**	**0.393**	**0.670**	**0.507**	**0.501**	**0.118**	**0.314**	**0.333**	**0.517**	**0.309**	**0.243**	**0.091**
UT7	**0.770**	**0.139**	**0.197**	**0.324**	0.062	**0.370**	**0.647**	**0.477**	**0.575**	**0.082**	**0.359**	**0.443**	**0.602**	**0.456**	**0.323**	**0.059**
UT8	**0.794**	**0.248**	**0.266**	**0.571**	**0.236**	**0.044**	**0.719**	**0.536**	**0.716**	0.033	0.068	**0.632**	**0.740**	**0.681**	**0.601**	**0.176**
UT9	**0.762**	**0.449**	**0.469**	**0.517**	**0.336**	**0.447**	**0.729**	**0.629**	**0.618**	**0.292**	**0.414**	**0.470**	**0.593**	**0.421**	**0.411**	**0.305**
UT10	**0.754**	**0.471**	**0.460**	**0.629**	**0.410**	**0.275**	**0.727**	**0.591**	**0.705**	**0.294**	**0.291**	**0.606**	**0.698**	**0.651**	**0.597**	**0.405**
ID1	**0.830**	**0.532**	**0.505**	**0.669**	**0.461**	**0.420**	**0.797**	**0.654**	**0.751**	**0.297**	**0.344**	**0.679**	**0.774**	**0.717**	**0.655**	**0.430**
ID2	**0.757**	**0.424**	**0.373**	**0.564**	**0.329**	**0.291**	**0.735**	**0.566**	**0.669**	**0.139**	**0.209**	**0.562**	**0.671**	**0.598**	**0.515**	**0.267**
WY3	**0.513**	**0.192**	**0.140**	**0.243**	**0.092**	**0.195**	**0.509**	**0.308**	**0.385**	0.007	0.112	**0.226**	**0.330**	**0.218**	**0.152**	**0.063**
MT1	**0.549**	**0.402**	**0.344**	**0.410**	**0.289**	**0.336**	**0.548**	**0.426**	**0.446**	**0.252**	**0.273**	**0.352**	**0.440**	**0.392**	**0.347**	**0.344**
ID3	**0.633**	**0.519**	**0.439**	**0.475**	**0.376**	**0.465**	**0.634**	**0.523**	**0.495**	**0.351**	**0.385**	**0.413**	**0.501**	**0.451**	**0.404**	**0.456**
ID4	**0.750**	**0.677**	**0.567**	**0.630**	**0.526**	**0.618**	**0.758**	**0.648**	**0.620**	**0.495**	**0.505**	**0.561**	**0.645**	**0.627**	**0.561**	**0.633**
ID5	**0.764**	**0.535**	**0.508**	**0.623**	**0.437**	**0.458**	**0.745**	**0.623**	**0.684**	**0.365**	**0.395**	**0.594**	**0.686**	**0.629**	**0.579**	**0.473**
ID6	**0.744**	**0.534**	**0.458**	**0.494**	**0.370**	**0.590**	**0.709**	**0.552**	**0.511**	**0.387**	**0.443**	**0.450**	**0.590**	**0.540**	**0.438**	**0.533**
OR1	**0.816**	**0.679**	**0.640**	**0.714**	**0.594**	**0.649**	**0.800**	**0.700**	**0.740**	**0.563**	**0.575**	**0.691**	**0.761**	**0.736**	**0.691**	**0.665**
OR2	**0.757**	**0.598**	**0.547**	**0.650**	**0.499**	**0.522**	**0.747**	**0.628**	**0.688**	**0.444**	**0.449**	**0.617**	**0.697**	**0.666**	**0.614**	**0.561**
OR3	**0.793**	**0.669**	**0.620**	**0.696**	**0.579**	**0.620**	**0.786**	**0.692**	**0.723**	**0.542**	**0.550**	**0.655**	**0.731**	**0.699**	**0.659**	**0.635**
WA2	**0.639**	**0.602**	**0.508**	**0.505**	**0.479**	**0.586**	**0.629**	**0.526**	**0.506**	**0.500**	**0.508**	**0.465**	**0.553**	**0.584**	**0.484**	**0.617**
WA3	**0.514**	**0.490**	**0.409**	**0.387**	**0.380**	**0.469**	**0.512**	**0.427**	**0.408**	**0.398**	**0.415**	**0.349**	**0.425**	**0.444**	**0.363**	**0.492**
CA1	**0.712**	**0.643**	**0.583**	**0.576**	**0.528**	**0.625**	**0.692**	**0.616**	**0.564**	**0.546**	**0.570**	**0.525**	**0.600**	**0.591**	**0.535**	**0.635**
CA2	**0.536**	**0.586**	**0.420**	**0.389**	**0.396**	**0.575**	**0.533**	**0.407**	**0.315**	**0.450**	**0.438**	**0.300**	**0.390**	**0.472**	**0.359**	**0.594**
A. canorus - CA4, CA5	**0.892**	**0.889**	**0.826**	**0.853**	**0.832**	**0.872**	**0.901**	**0.846**	**0.851**	**0.814**	**0.811**	**0.841**	**0.872**	**0.887**	**0.844**	**0.888**
A. exsul - CA3	**0.890**	**0.865**	**0.849**	**0.809**	**0.841**	**0.922**	**0.850**	**0.810**	**0.772**	**0.874**	**0.895**	**0.827**	**0.868**	**0.894**	**0.858**	**0.911**
A. nelsoni - NV1	**0.592**	**0.574**	**0.404**	**0.389**	**0.363**	**0.565**	**0.596**	**0.436**	**0.322**	**0.408**	**0.393**	**0.268**	**0.401**	**0.434**	**0.318**	**0.571**

Table 6 Pairwise F_{ST} (above diagonal) and R_{ST} (below diagonal) values derived from microsatellite genotype data. Values significantly different from zero (P < 0.05) are in bold.

Anaxyrus boreas	UT6	UT7	UT8	UT9	UT10	ID1	ID2	WY3	MT1	ID3	ID4	ID5	ID6	OR1	OR2	OR3
CO1	**0.232**	**0.245**	**0.216**	**0.201**	**0.199**	**0.218**	**0.217**	**0.207**	**0.196**	**0.202**	**0.216**	**0.201**	**0.246**	**0.206**	**0.203**	**0.202**
CO2	**0.031**	**0.050**	**0.032**	**0.028**	**0.028**	**0.029**	**0.030**	**0.028**	**0.026**	**0.026**	**0.028**	**0.027**	**0.028**	**0.027**	**0.028**	**0.028**
CO3	**0.025**	**0.045**	**0.025**	**0.023**	**0.021**	**0.022**	**0.023**	**0.021**	**0.019**	**0.020**	**0.021**	**0.020**	0.021	**0.021**	**0.021**	**0.022**
CO4	**0.018**	**0.037**	**0.019**	**0.016**	**0.015**	**0.015**	**0.017**	**0.015**	**0.013**	**0.013**	**0.015**	**0.014**	**0.014**	**0.014**	**0.015**	**0.015**
CO5	**0.008**	**0.028**	**0.009**	0.003	**0.005**	**0.006**	**0.007**	**0.004**	**0.004**	**0.004**	**0.005**	**0.004**	0.004	**0.004**	**0.005**	**0.006**
CO6	**0.024**	**0.036**	**0.022**	**0.021**	**0.020**	**0.021**	**0.021**	**0.019**	**0.019**	**0.019**	**0.020**	**0.019**	**0.020**	**0.020**	**0.020**	**0.021**
CO7	**0.014**	**0.032**	**0.015**	**0.013**	**0.011**	**0.012**	**0.013**	**0.010**	**0.010**	**0.010**	**0.011**	**0.010**	0.010	**0.010**	**0.011**	**0.012**
CO8	**0.021**	**0.044**	**0.024**	**0.021**	**0.020**	**0.021**	**0.023**	**0.012**	**0.019**	**0.019**	**0.020**	**0.019**	**0.020**	**0.020**	**0.020**	**0.021**
CO9	**0.264**	**0.277**	**0.246**	**0.228**	**0.227**	**0.248**	**0.246**	**0.235**	**0.225**	**0.231**	**0.246**	**0.230**	**0.283**	**0.235**	**0.232**	**0.231**
CO10	**0.017**	**0.028**	**0.017**	**0.012**	**0.013**	**0.012**	0.001	**0.010**	**0.012**	**0.012**	**0.014**	**0.013**	0.013	**0.013**	**0.014**	**0.014**
CO11	**0.026**	**0.047**	**0.024**	**0.021**	**0.022**	**0.020**	**0.024**	**0.022**	**0.020**	**0.020**	**0.022**	**0.021**	**0.021**	**0.021**	**0.022**	**0.022**
UT1	**0.040**	**0.069**	**0.045**	**0.041**	**0.044**	**0.046**	**0.047**	**0.042**	**0.042**	**0.042**	**0.045**	**0.043**	**0.046**	**0.044**	**0.044**	**0.045**
UT2	**0.115**	**0.133**	**0.111**	**0.102**	**0.104**	**0.109**	**0.110**	**0.106**	**0.101**	**0.103**	**0.108**	**0.103**	**0.116**	**0.105**	**0.105**	**0.105**
UT3	**0.060**	**0.079**	**0.059**	**0.056**	**0.054**	**0.056**	**0.057**	**0.055**	**0.052**	**0.053**	**0.055**	**0.053**	**0.057**	**0.054**	**0.054**	**0.055**
UT4	**0.041**	**0.061**	**0.041**	**0.039**	**0.036**	**0.038**	**0.039**	**0.037**	**0.035**	**0.035**	**0.037**	**0.035**	**0.037**	**0.036**	**0.036**	**0.037**
UT5	**0.013**	**0.033**	**0.014**	**0.012**	**0.011**	**0.012**	**0.013**	**0.011**	**0.010**	**0.010**	**0.011**	**0.010**	0.010	**0.010**	**0.011**	**0.012**
UT6	**-**	**0.029**	**0.007**	**0.008**	**0.006**	**0.007**	**0.008**	**0.006**	**0.004**	**0.004**	**0.006**	**0.005**	0.005	**0.005**	**0.006**	**0.007**
UT7	**0.105**	**-**	**0.029**	**0.027**	**0.025**	**0.026**	**0.025**	**0.024**	**0.023**	**0.024**	**0.025**	**0.024**	**0.025**	**0.025**	**0.025**	**0.026**
UT8	**0.257**	**0.239**	**-**	**0.009**	**0.007**	**0.007**	**0.008**	**0.006**	**0.005**	**0.005**	**0.007**	**0.006**	0.006	**0.006**	**0.007**	**0.007**
UT9	**0.107**	**0.305**	**0.352**	**-**	**0.005**	**0.005**	**0.007**	**0.004**	**0.004**	**0.004**	**0.005**	**0.005**	0.004	**0.005**	**0.006**	**0.006**
UT10	**0.359**	**0.399**	**0.219**	**0.339**	**-**	**0.004**	**0.005**	**0.003**	**0.002**	**0.002**	**0.003**	**0.002**	0.002	**0.003**	**0.003**	**0.004**
ID1	**0.315**	**0.451**	**0.281**	**0.231**	**0.182**	**-**	0.001	**0.004**	**0.002**	**0.002**	**0.003**	**0.003**	0.002	**0.003**	**0.004**	**0.004**
ID2	**0.193**	**0.282**	**0.169**	**0.182**	**0.200**	0.008	**-**	**0.003**	**0.003**	**0.003**	**0.005**	**0.004**	0.004	**0.004**	**0.005**	**0.006**
WY3	0.008	**0.042**	**0.131**	**0.110**	**0.285**	**0.166**	**0.081**	**-**	**0.002**	**0.002**	**0.003**	**0.002**	0.002	**0.002**	**0.003**	**0.004**
MT1	**0.228**	**0.285**	**0.302**	**0.245**	**0.260**	**0.237**	**0.237**	**0.204**	**-**	0.000	**0.001**	0.001	0.000	**0.001**	**0.001**	**0.002**
ID3	**0.289**	**0.378**	**0.426**	**0.287**	**0.398**	**0.335**	**0.330**	**0.255**	**0.025**	**-**	**0.001**	0.000	0.000	**0.001**	**0.002**	**0.002**
ID4	**0.435**	**0.554**	**0.584**	**0.416**	**0.541**	**0.444**	**0.456**	**0.392**	**0.153**	**0.090**	**-**	**0.002**	0.001	0.002	**0.003**	**0.003**
ID5	**0.337**	**0.444**	**0.380**	**0.291**	**0.232**	**0.239**	**0.251**	**0.256**	**0.053**	**0.154**	**0.294**	**-**	0.001	**0.001**	**0.002**	**0.003**
ID6	**0.255**	**0.398**	**0.509**	**0.255**	**0.413**	**0.419**	**0.351**	**0.147**	0.024	0.038	**0.227**	**0.213**	**-**	0.001	0.002	0.002
OR1	**0.524**	**0.618**	**0.598**	**0.480**	**0.457**	**0.461**	**0.463**	**0.399**	**0.024**	**0.099**	**0.196**	**0.131**	**0.266**	**-**	0.001	**0.003**
OR2	**0.433**	**0.513**	**0.470**	**0.409**	**0.325**	**0.335**	**0.350**	**0.332**	**0.029**	**0.129**	**0.254**	**0.043**	**0.233**	0.023	**-**	**0.002**
OR3	**0.502**	**0.598**	**0.578**	**0.475**	**0.489**	**0.448**	**0.461**	**0.429**	**0.066**	**0.130**	**0.185**	**0.163**	**0.316**	**0.062**	**0.086**	**-**
WA2	**0.452**	**0.482**	**0.567**	**0.524**	**0.509**	**0.565**	**0.522**	**0.386**	**0.308**	**0.340**	**0.505**	**0.517**	**0.215**	**0.573**	**0.521**	**0.609**
WA3	**0.362**	**0.365**	**0.460**	**0.459**	**0.458**	**0.489**	**0.450**	**0.337**	**0.299**	**0.327**	**0.493**	**0.457**	**0.179**	**0.514**	**0.473**	**0.556**
CA1	**0.484**	**0.539**	**0.605**	**0.509**	**0.542**	**0.580**	**0.558**	**0.453**	**0.267**	**0.264**	**0.403**	**0.472**	**0.175**	**0.489**	**0.470**	**0.545**
CA2	**0.400**	**0.440**	**0.567**	**0.545**	**0.597**	**0.577**	**0.538**	**0.391**	**0.282**	**0.293**	**0.440**	**0.504**	**0.169**	**0.509**	**0.495**	**0.552**
A. canorus - CA4, CA5	**0.806**	**0.845**	**0.860**	**0.824**	**0.831**	**0.808**	**0.799**	**0.748**	**0.628**	**0.623**	**0.626**	**0.789**	**0.678**	**0.777**	**0.758**	**0.779**
A. exsul - CA3	**0.829**	**0.876**	**0.902**	**0.830**	**0.852**	**0.887**	**0.856**	**0.717**	**0.568**	**0.578**	**0.693**	**0.821**	**0.656**	**0.826**	**0.798**	**0.820**
A. nelsoni - NV1	**0.318**	**0.400**	**0.544**	**0.423**	**0.540**	**0.516**	**0.474**	**0.308**	**0.193**	**0.167**	**0.324**	**0.433**	**0.032**	**0.441**	**0.427**	**0.491**

Table 6 Pairwise F_{ST} (above diagonal) and R_{ST} (below diagonal) values derived from microsatellite genotype data. Values significantly different from zero (P < 0.05) are in bold.

Anaxyrus boreas	WA2	WA3	CA1	CA2	*A. canorus - CA4, C5*	*A. exsul - CA3*	*A. nelsoni - NV1*
CO1	**0.219**	**0.205**	**0.205**	**0.227**	**0.224**	**0.247**	**0.254**
CO2	**0.027**	**0.026**	**0.026**	**0.027**	**0.028**	**0.038**	**0.036**
CO3	**0.020**	**0.020**	**0.020**	**0.020**	**0.021**	**0.031**	**0.029**
CO4	**0.013**	**0.013**	**0.013**	**0.014**	**0.015**	**0.024**	**0.022**
CO5	**0.004**	**0.004**	**0.004**	**0.004**	**0.005**	**0.014**	**0.012**
CO6	**0.019**	**0.019**	**0.019**	**0.020**	**0.021**	**0.030**	**0.028**
CO7	**0.010**	**0.010**	**0.010**	**0.010**	**0.011**	**0.020**	**0.018**
CO8	**0.019**	**0.019**	**0.019**	**0.019**	**0.020**	**0.030**	**0.028**
CO9	**0.250**	**0.235**	**0.234**	**0.260**	**0.255**	**0.282**	**0.292**
CO10	**0.013**	**0.012**	**0.012**	**0.013**	**0.014**	**0.023**	**0.021**
CO11	**0.020**	**0.020**	**0.020**	**0.021**	**0.022**	**0.032**	**0.030**
UT1	**0.044**	**0.043**	**0.043**	**0.044**	**0.045**	**0.056**	**0.054**
UT2	**0.108**	**0.104**	**0.104**	**0.111**	**0.111**	**0.124**	**0.125**
UT3	**0.055**	**0.053**	**0.053**	**0.055**	**0.056**	**0.067**	**0.065**
UT4	**0.036**	**0.035**	**0.035**	**0.036**	**0.037**	**0.047**	**0.046**
UT5	**0.010**	**0.010**	**0.010**	**0.010**	**0.011**	**0.020**	**0.018**
UT6	**0.005**	**0.005**	**0.005**	0.005	**0.006**	**0.015**	**0.013**
UT7	**0.024**	**0.024**	**0.024**	**0.024**	**0.025**	**0.035**	**0.033**
UT8	**0.005**	**0.005**	**0.005**	**0.005**	**0.007**	**0.016**	**0.014**
UT9	**0.004**	**0.004**	**0.004**	0.004	**0.005**	**0.014**	**0.012**
UT10	0.002	**0.002**	**0.002**	0.002	**0.003**	**0.012**	**0.010**
ID1	0.002	**0.002**	**0.002**	0.002	**0.003**	**0.012**	**0.010**
ID2	**0.004**	**0.003**	**0.003**	0.004	**0.005**	**0.014**	**0.012**
WY3	0.002	**0.002**	**0.002**	0.002	**0.003**	**0.012**	**0.010**
MT1	0.000	0.000	0.000	0.000	0.001	**0.010**	**0.008**
ID3	0.000	0.000	0.000	0.000	0.001	**0.010**	**0.008**
ID4	0.001	0.001	0.001	0.001	0.002	**0.012**	**0.009**
ID5	0.001	0.001	0.001	0.001	0.002	**0.011**	**0.008**
ID6	0.000	0.000	0.000	0.000	0.001	0.011	0.008
OR1	0.001	0.001	0.001	0.001	0.002	**0.011**	**0.009**
OR2	0.002	**0.002**	**0.002**	0.002	0.003	**0.012**	**0.010**
OR3	0.002	**0.002**	**0.002**	0.002	**0.003**	**0.012**	**0.010**
WA2	**-**	0.000	0.000	0.000	0.001	**0.010**	**0.008**
WA3	-0.006	**-**	0.000	0.000	0.001	**0.010**	**0.008**
CA1	**0.174**	**0.198**	**-**	0.000	0.001	**0.010**	**0.008**
CA2	**0.215**	**0.195**	**0.192**	**-**	0.001	**0.010**	**0.008**
A. canorus - CA4, CA5	**0.689**	**0.667**	**0.686**	**0.684**	**-**	**0.012**	**0.009**
A. exsul - CA3	**0.458**	**0.382**	**0.468**	**0.277**	**0.821**	**-**	**0.019**
A. nelsoni - NV1	**0.091**	**0.096**	**0.070**	0.036	**0.641**	**0.306**	**-**

Table 7 Assignment of individuals to population.

Population	CO1	CO2	CO3	CO4	CO5	CO6	CO7	CO8	CO9	CO10	CO11	UT1	UT2	UT3	UT4	UT5	UT6	UT7	UT8	UT9
CO1	12																			
CO2		58																		
CO3			8																	
CO4				17																
CO5		1			10			1												
CO6						19														
CO7							23													
CO8								11												
CO9									8											
CO10				1		1				9										
CO11										1	4									
UT1												8								
UT2													11							
UT3														23	1					
UT4														3	7					
UT5																35	1			
UT6																	12		1	
UT7																		16		
UT8																	4		19	
UT9																				49
UT10																				
ID1																				
ID2																				
WY3																				
MT1																				
ID3																				
ID4																				
ID5																				
ID6																				
OR1																				
OR2																				
OR3																				
WA2																				
WA3																				
CA1																				
CA2																				
A. canorus																				
A. exsul																				
A. nelsoni																				
number in sample	12	58	8	17	12	19	23	11	8	12	5	8	11	24	10	36	13	16	23	49
number correctly assigned	12	58	8	17	10	19	23	11	8	9	4	8	11	23	7	35	12	16	19	49
percent correctly assigned	100	100	100	100	83.3	100	100	100	100	75.0	80.0	100	100	95.8	70.0	97.2	92.3	100	82.6	100

Table 7 *continued*

Population	UT10	ID1	ID2	WY3	MT1	ID3	ID4	ID5	ID6	OR1	OR2	OR3	WA2	WA3	CA1	CA2	*A. canorus*	*A. exsul*	*A. nelsoni*
CO_1																			
CO_2																			
CO_3																			
CO_4																			
CO_5																			
CO_6																			
CO_7																			
CO_8																			
CO_9																			
CO_10			1																
CO_11																			
UT_1																			
UT_2																			
UT_3																			
UT_4																			
UT_5																			
UT_6																			
UT_7																			
UT_8																			
UT_9																			
UT_10	47																		
ID_1		18	1																
ID_2		4	17																
WY_3				29															
MT_1					51														
ID_3						35													
ID_4							20												
ID_5								37											
ID_6									8										
OR_1										28	1	1							
OR_2										3	33								
OR_3										1		38							
WA_2													17						
WA_3														29					
CA_1															30				
CA_2																13			
A. canorus																	15		
A. exsul																		10	
A. nelsoni																			8
number in sample	47	19	21	29	51	35	20	37	8	30	36	39	17	29	30	13	15	10	8
number correctly assigned	47	18	17	29	51	35	20	37	8	28	33	39	17	29	30	13	15	10	8
percent correctly assigned	100	94.7	81.0	100	100	100	100	100	100	93.3	91.7	100	100	100	100	100	100	100	100

Table 8 Collection information for specimens used in this study.

Site	Breeding Population	Species	N	State	County	Latitude	Longitude	Altitude (meters)
1	CO1	*Anaxyrus boreas boreas*	9	CO	Hinsdale	37.64286511	-107.1342995	3297
2	CO1	*Anaxyrus boreas boreas*	5	CO	Mineral	37.68026461	-107.0702178	3141
3	CO2	*Anaxyrus boreas boreas*	5	CO	Chaffee	38.76085652	-106.3447896	3189
4	CO2	*Anaxyrus boreas boreas*	20	CO	Chaffee	38.76109645	-106.3450819	3189
5	CO2	*Anaxyrus boreas boreas*	3	CO	Chaffee	38.80943572	-106.3147221	2993
6	CO2	*Anaxyrus boreas boreas*	3	CO	Chaffee	38.81196516	-106.3316530	3056
7	CO2	*Anaxyrus boreas boreas*	16	CO	Chaffee	38.81136109	-106.3324710	3060
8	CO2	*Anaxyrus boreas boreas*	3	CO	Chaffee	38.82635506	-106.3419547	3251
9	CO2	*Anaxyrus boreas boreas*	18	CO	Chaffee	38.82625131	-106.3407893	3243
10	CO2	*Anaxyrus boreas boreas*	3	CO	Gunnison	38.87926200	-106.3502813	3374
11	CO3	*Anaxyrus boreas boreas*	3	CO	Gunnison	38.90752818	-106.8545555	2880
12	CO3	*Anaxyrus boreas boreas*	1	CO	Gunnison	38.90757837	-106.8547990	2869
13	CO3	*Anaxyrus boreas boreas*	1	CO	Gunnison	38.90771458	-106.8552984	2869
14	CO3	*Anaxyrus boreas boreas*	1	CO	Gunnison	38.91065545	-106.8522496	2874
15	CO3	*Anaxyrus boreas boreas*	1	CO	Gunnison	38.91081134	-106.8526458	2874
16	CO3	*Anaxyrus boreas boreas*	1	CO	Gunnison	38.91103525	-106.8532975	2866
17	CO4	*Anaxyrus boreas boreas*	20	CO	Gunnison	38.99806499	-106.9348583	3422
18	CO5	*Anaxyrus boreas boreas*	21	CO	Eagle	39.64347849	-106.3185610	2594
19	CO6	*Anaxyrus boreas boreas*	20	CO	Clear Creek	39.70139437	-105.8681111	3227
20	CO7	*Anaxyrus boreas boreas*	23	CO	Grand	39.77695389	-105.9284254	3093
21	CO8	*Anaxyrus boreas boreas*	19	CO	Grand	39.98103128	-105.9025937	2625
22	CO9	*Anaxyrus boreas boreas*	24	CO	Routt	40.17298889	-106.6834265	3129
23	CO10	*Anaxyrus boreas boreas*	6	CO	Routt	40.77169623	-107.1298333	2466
24	CO10	*Anaxyrus boreas boreas*	20	CO	Routt	40.77615870	-107.1286606	2485
25	CO11	*Anaxyrus boreas boreas*	5	CO	Routt	40.85252654	-106.7176660	2805
26	WY1	*Anaxyrus boreas boreas*	1	WY	Carbon	41.22400780	-106.4359563	2685
27	WY2	*Anaxyrus boreas boreas*	2	WY	Carbon	41.31853413	-106.4881974	2576
28	UT1	*Anaxyrus boreas boreas*	1	UT	Wayne	38.19513075	-111.5509881	3064
29	UT1	*Anaxyrus boreas boreas*	2	UT	Wayne	38.19503526	-111.5502108	3074
30	UT1	*Anaxyrus boreas boreas*	1	UT	Wayne	38.19480436	-111.5494782	3078
31	UT1	*Anaxyrus boreas boreas*	1	UT	Wayne	38.19481391	-111.5493641	3078
32	UT1	*Anaxyrus boreas boreas*	2	UT	Wayne	38.20381274	-111.4716860	2994
33	UT1	*Anaxyrus boreas boreas*	1	UT	Wayne	38.22028253	-111.4639097	2864
34	UT1	*Anaxyrus boreas boreas*	1	UT	Wayne	38.21803132	-111.4634270	2881
35	UT2	*Anaxyrus boreas boreas*	1	UT	Wayne	38.42113734	-111.4601396	3220
36	UT2	*Anaxyrus boreas boreas*	1	UT	Wayne	38.42120038	-111.4601514	3220
37	UT2	*Anaxyrus boreas boreas*	1	UT	Wayne	38.42120953	-111.4601171	3220
38	UT2	*Anaxyrus boreas boreas*	1	UT	Wayne	38.42144487	-111.4598551	3218
39	UT2	*Anaxyrus boreas boreas*	1	UT	Wayne	38.42144461	-111.4599238	3218
40	UT2	*Anaxyrus boreas boreas*	1	UT	Wayne	38.42148034	-111.4600043	3218
41	UT2	*Anaxyrus boreas boreas*	1	UT	Wayne	38.42159677	-111.4601883	3218
42	UT2	*Anaxyrus boreas boreas*	1	UT	Wayne	38.41557458	-111.4607114	3218
43	UT2	*Anaxyrus boreas boreas*	3	UT	Wayne	38.45416431	-111.4585041	3083
44	UT3	*Anaxyrus boreas boreas*	1	UT	Piute	38.45145320	-112.0740161	2784
45	UT3	*Anaxyrus boreas boreas*	1	UT	Piute	38.47147481	-112.0683981	2920
46	UT3	*Anaxyrus boreas boreas*	1	UT	Piute	38.47157372	-112.0684224	2920
47	UT3	*Anaxyrus boreas boreas*	1	UT	Piute	38.47214034	-112.0685454	2910
48	UT3	*Anaxyrus boreas boreas*	1	UT	Piute	38.48296742	-112.0847792	3084
49	UT3	*Anaxyrus boreas boreas*	1	UT	Piute	38.48315515	-112.0849426	3084

Table 8 *continued*

Site	Breeding Population	Species	N	State	County	Latitude	Longitude	Altitude (meters)
50	UT3	*Anaxyrus boreas boreas*	1	UT	Piute	38.48264867	-112.0841668	3073
51	UT3	*Anaxyrus boreas boreas*	1	UT	Piute	38.48275733	-112.0841111	3073
52	UT3	*Anaxyrus boreas boreas*	1	UT	Piute	38.48471984	-112.0872476	3088
53	UT3	*Anaxyrus boreas boreas*	1	UT	Piute	38.48434152	-112.0891681	3112
54	UT3	*Anaxyrus boreas boreas*	1	UT	Piute	38.48436599	-112.0894436	3112
55	UT3	*Anaxyrus boreas boreas*	1	UT	Piute	38.49278690	-112.0665112	3000
56	UT3	*Anaxyrus boreas boreas*	1	UT	Piute	38.49315276	-112.0659203	2978
57	UT3	*Anaxyrus boreas boreas*	1	UT	Piute	38.49326328	-112.0656582	2978
58	UT3	*Anaxyrus boreas boreas*	1	UT	Piute	38.49338220	-112.0654650	2978
59	UT3	*Anaxyrus boreas boreas*	1	UT	Piute	38.49318872	-112.0639486	2981
60	UT3	*Anaxyrus boreas boreas*	2	UT	Piute	38.49266956	-112.0665324	3000
61	UT3	*Anaxyrus boreas boreas*	4	UT	Piute	38.49335496	-112.0654875	2978
62	UT3	*Anaxyrus boreas boreas*	1	UT	Piute	38.49338272	-112.0654077	2980
63	UT3	*Anaxyrus boreas boreas*	1	UT	Piute	38.49096404	-112.0161357	2783
64	UT4	*Anaxyrus boreas boreas*	1	UT	Sevier	38.57633602	-111.9904974	2856
65	UT4	*Anaxyrus boreas boreas*	1	UT	Sevier	38.57734229	-111.9951033	2920
66	UT4	*Anaxyrus boreas boreas*	1	UT	Sevier	38.57674529	-111.9900553	2856
67	UT4	*Anaxyrus boreas boreas*	2	UT	Sevier	38.57600169	-111.9874047	2887
68	UT4	*Anaxyrus boreas boreas*	1	UT	Sevier	38.57680904	-111.9899758	2856
69	UT4	*Anaxyrus boreas boreas*	1	UT	Sevier	38.63744390	-111.9905221	3034
70	UT4	*Anaxyrus boreas boreas*	1	UT	Sevier	38.57714622	-111.9895327	2854
71	UT4	*Anaxyrus boreas boreas*	1	UT	Wasatch	38.57783792	-111.9887271	2854
72	UT4	*Anaxyrus boreas boreas*	1	UT	Wasatch	38.57537385	-111.9881194	2883
73	UT5	*Anaxyrus boreas boreas*	2	UT	Wasatch	40.17762780	-111.1550892	2322
74	UT5	*Anaxyrus boreas boreas*	5	UT	Wasatch	40.18759880	-111.1569679	2320
75	UT5	*Anaxyrus boreas boreas*	24	UT	Wasatch	40.17756876	-111.1714037	2324
76	UT5	*Anaxyrus boreas boreas*	1	UT	Wasatch	40.19476287	-111.1747718	2381
77	UT5	*Anaxyrus boreas boreas*	1	UT	Wasatch	40.17770197	-111.1953768	2331
78	UT5	*Anaxyrus boreas boreas*	3	UT	Wasatch	40.17644513	-111.1926953	2324
79	UT5	*Anaxyrus boreas boreas*	1	UT	Wasatch	40.18297916	-111.2020170	2376
80	UT6	*Anaxyrus boreas boreas*	1	UT	Summit	40.81754996	-110.9308219	2884
81	UT6	*Anaxyrus boreas boreas*	3	UT	Summit	40.83337949	-110.9334978	2826
82	UT6	*Anaxyrus boreas boreas*	4	UT	Summit	40.83435660	-110.9412181	2854
83	UT6	*Anaxyrus boreas boreas*	1	UT	Summit	40.85723802	-110.8736989	2789
84	UT6	*Anaxyrus boreas boreas*	6	UT	Summit	40.85723802	-110.8736989	2789
85	UT7	*Anaxyrus boreas boreas*	4	UT	Summit	40.85792763	-110.7625706	2702
86	UT7	*Anaxyrus boreas boreas*	1	UT	Summit	40.86079798	-110.7698101	2699
87	UT7	*Anaxyrus boreas boreas*	3	UT	Summit	40.85852234	-110.7583089	2739
88	UT7	*Anaxyrus boreas boreas*	8	UT	Summit	40.85792763	-110.7625706	2702
89	UT8	*Anaxyrus boreas boreas*	2	UT	Summit	40.92298632	-110.9334793	2730
90	UT8	*Anaxyrus boreas boreas*	1	UT	Summit	40.93706855	-110.9373734	2605
91	UT8	*Anaxyrus boreas boreas*	3	UT	Summit	40.94930355	-110.9405698	2499
92	UT8	*Anaxyrus boreas boreas*	1	UT	Summit	40.94677281	-110.9417364	2504
93	UT8	*Anaxyrus boreas boreas*	6	UT	Summit	40.94930355	-110.9405698	2499
94	UT8	*Anaxyrus boreas boreas*	10	UT	Summit	40.94930355	-110.9405698	2499
95	UT9	*Anaxyrus boreas boreas*	1	UT	Rich	41.44050981	-111.4715509	2489
96	UT9	*Anaxyrus boreas boreas*	6	UT	Rich	41.44913702	-111.4742233	2573
97	UT9	*Anaxyrus boreas boreas*	3	UT	Rich	41.50771858	-111.4290921	2357
98	UT9	*Anaxyrus boreas boreas*	8	UT	Cache	41.50880946	-111.5084025	2603

Table 8 *continued*

Site	Breeding Population	Species	N	State	County	Latitude	Longitude	Altitude (meters)
99	UT9	*Anaxyrus boreas boreas*	7	UT	Cache	41.52507448	-111.4619883	2586
100	UT9	*Anaxyrus boreas boreas*	25	UT	Cache	41.53303994	-111.4544689	2562
101	UT10	*Anaxyrus boreas boreas*	7	UT	Box Elder	41.53313076	-113.7649079	2103
102	UT10	*Anaxyrus boreas boreas*	3	UT	Box Elder	41.53387150	-113.7659343	2089
103	UT10	*Anaxyrus boreas boreas*	13	UT	Box Elder	41.52776619	-113.7558105	2034
104	UT10	*Anaxyrus boreas boreas*	7	UT	Box Elder	41.54009028	-113.7417697	1936
105	UT10	*Anaxyrus boreas boreas*	9	UT	Box Elder	41.53830767	-113.7765160	1956
106	UT10	*Anaxyrus boreas boreas*	4	UT	Box Elder	41.57495080	-113.8105884	1750
107	UT10	*Anaxyrus boreas boreas*	1	UT	Box Elder	41.55239094	-113.8230263	1699
108	UT10	*Anaxyrus boreas boreas*	3	UT	Box Elder	41.52247855	-113.7785950	1964
109	UT10	*Anaxyrus boreas boreas*	2	UT	Box Elder	41.55756651	-113.8095947	1788
110	UT11	*Anaxyrus boreas boreas*	1	UT	Kane	37.42335329	-112.3558045	2605
111	UT11	*Anaxyrus boreas boreas*	1	UT	Kane	37.46046904	-112.3167992	2538
112	UT11	*Anaxyrus boreas boreas*	1	UT	Kane	37.49037150	-112.3378992	2533
113	ID1	*Anaxyrus boreas boreas*	3	ID	Caribou	42.92886200	-111.2904206	2024
114	ID1	*Anaxyrus boreas boreas*	3	ID	Caribou	42.92883557	-111.2901876	2025
115	ID1	*Anaxyrus boreas boreas*	1	ID	Caribou	42.92914735	-111.2879710	2026
116	ID1	*Anaxyrus boreas boreas*	1	ID	Caribou	42.93160612	-111.2615605	2087
117	ID1	*Anaxyrus boreas boreas*	2	ID	Caribou	42.93046674	-111.2596807	2093
118	ID1	*Anaxyrus boreas boreas*	1	ID	Caribou	42.97232291	-111.2674231	1977
119	ID1	*Anaxyrus boreas boreas*	3	ID	Caribou	42.97060480	-111.2104425	1992
120	ID1	*Anaxyrus boreas boreas*	3	ID	Caribou	42.97058442	-111.2117300	2000
121	ID1	*Anaxyrus boreas boreas*	5	ID	Caribou	42.97058442	-111.2117300	2000
122	ID2	*Anaxyrus boreas boreas*	1	ID	Bonneville	43.17162490	-111.3434990	1985
123	ID2	*Anaxyrus boreas boreas*	3	ID	Bonneville	43.17341432	-111.3473231	1986
124	ID2	*Anaxyrus boreas boreas*	1	ID	Bonneville	43.17326699	-111.3483927	1986
125	ID2	*Anaxyrus boreas boreas*	4	ID	Bonneville	43.17311294	-111.3487117	1986
126	ID2	*Anaxyrus boreas boreas*	6	ID	Bonneville	43.17321300	-111.3483800	1986
127	ID2	*Anaxyrus boreas boreas*	1	ID	Bonneville	43.17261196	-111.3564106	1999
128	ID2	*Anaxyrus boreas boreas*	6	ID	Bonneville	43.17689321	-111.3580227	2031
129	ID2	*Anaxyrus boreas boreas*	2	ID	Bonneville	43.18186543	-111.3660623	2043
130	ID2	*Anaxyrus boreas boreas*	1	ID	Bonneville	43.18139419	-111.3669947	2044
131	WY3	*Anaxyrus boreas boreas*	31	WY	Teton	43.83142560	-110.3472332	2094
132	WY3	*Anaxyrus boreas boreas*	21	WY	Teton	43.83399937	-110.3470061	2087
133	MT1	*Anaxyrus boreas boreas*	51	MT	Flathead	48.16345849	-114.8192805	1071
134	ID3	*Anaxyrus boreas boreas*	39	ID	Clearwater	46.88137000	-115.9122400	468
135	ID4	*Anaxyrus boreas boreas*	14	ID	Nez Perce	45.99001000	-116.7175400	325
136	ID4	*Anaxyrus boreas boreas*	3	ID	Nez Perce	45.96780000	-116.7451600	319
137	ID4	*Anaxyrus boreas boreas*	4	ID	Nez Perce	45.97862000	-116.7274600	321
138	ID5	*Anaxyrus boreas boreas*	40	ID	Idaho	45.41518000	-116.3023000	537
139	ID6	*Anaxyrus boreas boreas*	1	ID	Owyhee	42.58620458	-116.6371014	1649
140	ID6	*Anaxyrus boreas boreas*	1	ID	Owyhee	42.58582441	-116.6364942	1650
141	ID6	*Anaxyrus boreas boreas*	1	ID	Owyhee	42.57739390	-116.7121298	1618
142	ID6	*Anaxyrus boreas boreas*	1	ID	Owyhee	42.57079589	-116.7358950	1587
143	ID6	*Anaxyrus boreas boreas*	1	ID	Owyhee	42.56708797	-116.7449264	1662
144	ID6	*Anaxyrus boreas boreas*	1	ID	Owyhee	42.56786647	-116.7426936	1701
145	ID6	*Anaxyrus boreas boreas*	1	ID	Owyhee	42.56721263	-116.7442923	1671
146	ID6	*Anaxyrus boreas boreas*	1	ID	Owyhee	42.56756170	-116.7433284	1691
147	ID6	*Anaxyrus boreas boreas*	1	ID	Owyhee	42.56827477	-116.7400480	1678

Table 8 *continued*

Site	Breeding Population	Species	N	State	County	Latitude	Longitude	Altitude (meters)
148	ID6	*Anaxyrus boreas boreas*	1	ID	Owyhee	42.57723146	-116.7119965	1613
149	OR1	*Anaxyrus boreas boreas*	18	OR	Baker	45.07730000	-117.0548000	1970
150	OR1	*Anaxyrus boreas boreas*	7	OR	Baker	45.04558450	-117.0874509	2023
151	OR1	*Anaxyrus boreas boreas*	2	OR	Baker	45.05252384	-117.0997546	2051
152	OR1	*Anaxyrus boreas boreas*	18	OR	Baker	45.04909262	-117.0907833	2028
153	OR2	*Anaxyrus boreas boreas*	60	OR	Union	44.97616678	-117.4949779	1382
154	OR3	*Anaxyrus boreas boreas*	27	OR	Baker	44.95660000	-118.2270000	2182
155	OR3	*Anaxyrus boreas boreas*	14	OR	Grant	44.93420000	-118.2671000	2110
156	WA1	*Anaxyrus boreas boreas*	2	WA	Mason	47.47164866	-122.8972450	115
157	WA2	*Anaxyrus boreas boreas*	29	WA	Grays Harbor	47.30998973	-123.5670728	174
158	WA3	*Anaxyrus boreas boreas*	1	WA	Thurston	47.00255979	-122.6744360	87
159	WA3	*Anaxyrus boreas boreas*	3	WA	Thurston	46.96931355	-122.6856409	145
160	WA3	*Anaxyrus boreas boreas*	15	WA	Thurston	46.94965906	-122.6885551	148
161	WA4	*Anaxyrus boreas boreas*	1	WA	Thurston	46.79138835	-122.4673806	203
162	CA1	*Anaxyrus boreas boreas*	1	CA	Humboldt	40.84212393	-123.5665459	210
163	CA1	*Anaxyrus boreas boreas*	9	CA	Humboldt	40.85745741	-123.5825872	184
164	CA1	*Anaxyrus boreas boreas*	1	CA	Humboldt	40.85756265	-123.5867052	183
165	CA1	*Anaxyrus boreas boreas*	4	CA	Humboldt	40.86160525	-123.5871324	172
166	CA1	*Anaxyrus boreas boreas*	2	CA	Humboldt	40.86521185	-123.5829399	187
167	CA1	*Anaxyrus boreas boreas*	1	CA	Humboldt	40.86926742	-123.5843639	181
168	CA1	*Anaxyrus boreas boreas*	1	CA	Humboldt	40.86833058	-123.5879038	183
169	CA1	*Anaxyrus boreas boreas*	3	CA	Humboldt	40.86769524	-123.5888356	180
170	CA1	*Anaxyrus boreas boreas*	3	CA	Humboldt	40.86735199	-123.5925350	166
171	CA1	*Anaxyrus boreas boreas*	10	CA	Humboldt	40.88004600	-123.6095849	156
172	CA1	*Anaxyrus boreas boreas*	1	CA	Humboldt	40.88061308	-123.6113705	156
173	CA1	*Anaxyrus boreas boreas*	1	CA	Humboldt	40.88123897	-123.6122545	157
174	CA2	*Anaxyrus boreas halophylis*	14	CA	Ventura	34.53465406	-119.1797433	1075
175	NV1	*Anaxyrus nelsoni*	5	NV	Nye	37.00396723	-116.7128520	1170
176	NV1	*Anaxyrus nelsoni*	3	NV	Nye	36.91053728	-116.7553443	1009
177	CA3	*Anaxyrus exsul*	10	CA	Inyo	37.26240500	-118.0330600	1513
178	CA4	*Anaxyrus canorus*	10	CA	Tuolumne	37.81059000	-119.3099100	3183
179	CA5	*Anaxyrus canorus*	5	CA	Mono	38.32438300	-119.6135210	2776
	outgroup	*Anaxyrus americanus*	1	WV	Jefferson			
	outgroup	*Anaxyrus fowleri*	2	WV	Jefferson			

[1] MVZ Herp 142938 - 142947

[2] MVZ Herp 245454 - 245459

[3] MVZ Herp 223340 - 223344