Great Plains Fish & Wildlife Conservation Office News

September 2020

Image: Timelapse photos from our remote creel survey show that angler use at reservoirs on Ellsworth Air Force Base, SD provide valuable recreational opportunities for AFB personnel and their families.

Sikes Act

Continued remote creel survey project

- Thanks to the Montana, Colorado, and Missouri River FWCOs for offering assistance on our remote creel project.
- Survey of random-day images is complete. We have now processed more than 75,000 images.
- Landon is now compiling data for analyses.

Image: FISH ON! Random timelapse photos can capture some cool moments, such as this angler fighting a fish at Bandit Lake, Ellsworth AFB.

National Fish Hatchery Prioritization Project

Dan is putting the finishing touches on the Hatchery Prioritization Project's draft report for American shad.

Pallid Sturgeon Recovery

Pallid Sturgeon Technical Team

- Landon continued to represent FWS as a technical expert for the Missouri River Recovery Program.

Recovery coordination

- Landon participated in weekly coordination calls with the Pallid Sturgeon Recovery Coordinator to discuss issues related to pallid sturgeon recovery.

Asian Carp Team

Dozer trawl electrofishing system

- Worked with Gavins Point NFH staff (thanks Nick and Diane!) to procure an electrofishing system.
- PR was approved and vendor was selected. We will have an electrified dozer trawl for the 2021 sampling season.

Designs for an Electrified Dozer Trawl for Invasive Carp Capture

Kevin W. Drews, USFWS-Columbia Fish and Wildlife Conservation Office

The Electrified Dozer Trawl

Figure 1: The Electrified Dozer Trawl incorporates seven main components: The gantry (1. red), the trawl boom (2. green), the trawl frame (3. pink), the trawl net (4. dark green) the electrofishing booms (5. orange), the annode (6. turquoise), and the boat (7. blacky, which is also the cathode).

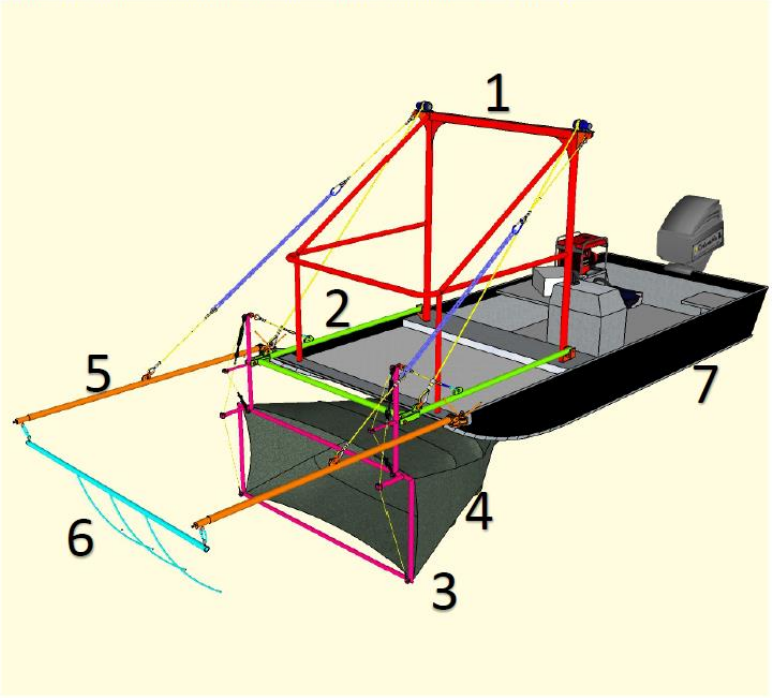

Attended Dr. Mark Pegg's (University of Nebraska) webinar on an FWS funded Asian carp project.

Great Plains FWCO

Project Leader:

Vacant (3 years, 4 months)

Acting Project Leader (3 years, 4 months), Fish & Wildlife Biologist:

Dan James

Fish & Wildlife Biologist:

Landon Pierce

Terms/seasonal:

none

https://www.fws.gov/mountain-prairie/fisheries/greatPlainsFWCO.php