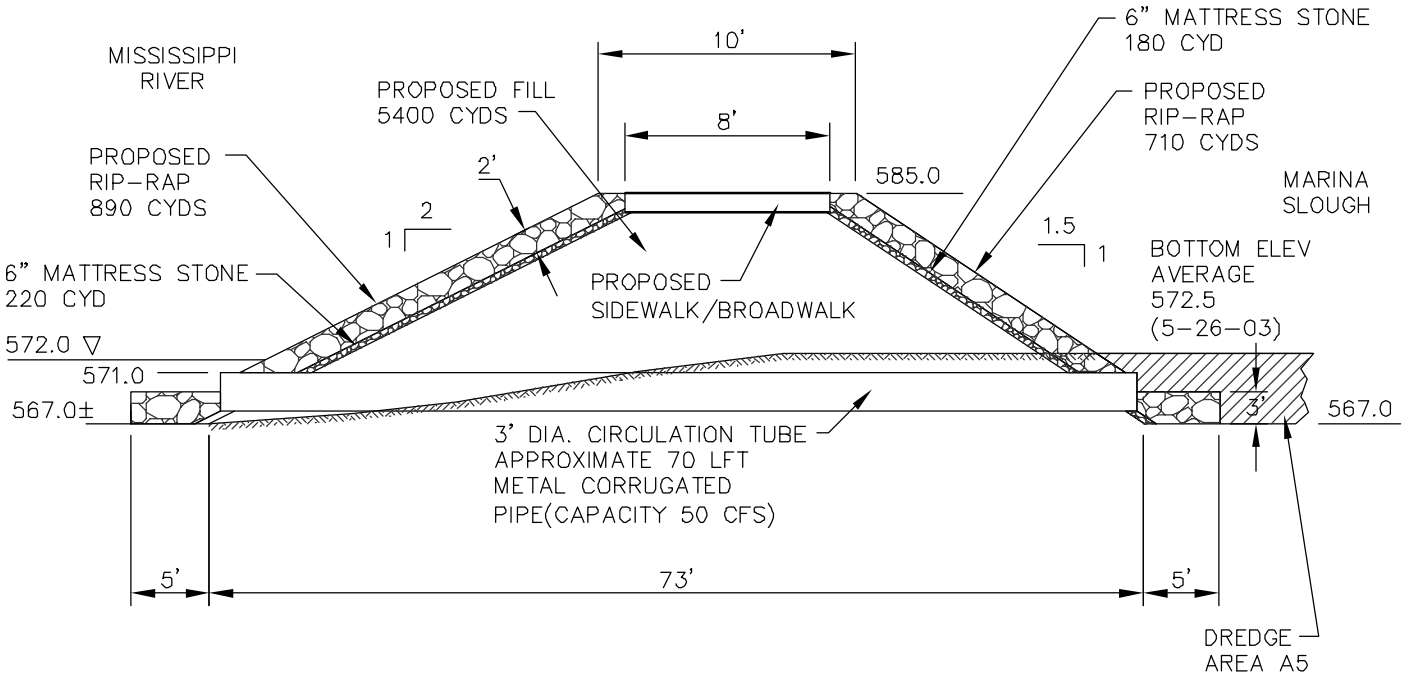

FLAT POOL = 572.00
WATER LEVEL 5-28-03 = 581.00
585 = TOP OF ISLAND BANK

SECTION D-D
PROPOSED SEDIMENT CONTROL STRUCTURE

NOT TO SCALE

NOTE:
RIPRAP & BEDDING STONE TO BE OF SIMILAR SIZE AND TYPE TO THAT FOUND ON USCOE FLOOD CONTROL LEVEE.

© COPYRIGHT 2002
ABONMARCHE CONSULTANTS, INC.

REVISED 7/04
NOTE ALL ELEVATIONS MSL 1912

ABONMARCHE CONSULTANTS, INC.
95 WEST MAIN STREET • BENTON HARBOR, MI 49023 • T (269) 927-2295 • F (269) 927-1017
Manistee, MI • Grand Haven, MI • Indianapolis, IN • South Bend, IN • Fort Wayne, IN

JOB NO. M30361p3

SHT. 11 OF 12

E:\LAND PROJECTS R2\ENG PROJECTS\M30361\dwg\M30361p3rev.dwg, SECTION D-D, 7/28/2004 11:56:03 AM, dlarson, 1:1