Timing of Impoundment Drawdowns and Impact on Waterbird, Invertebrate, and Vegetation Communities within Managed Wetlands

USGS Refuge Cooperative Research Program

Study Manual
Final Version Field Season 2005

USGS Contacts:
James E. Lyons, USGS Patuxent Wildlife Research Center, 12100 Beech Forest Road, Laurel, MD 20708, (301) 497-5625 (voice); (301) 497-5545 (fax); JLyons@usgs.gov

Michael C. Runge, USGS Patuxent Wildlife Research Center, 12100 Beech Forest Road, Laurel, MD 20708, (301) 497-5748 (voice); (301) 497-5545 (fax); Michael_Runge@usgs.gov

William L. Kendall, USGS Patuxent Wildlife Research Center, 12100 Beech Forest Road, Laurel, MD 20708, (301) 497-5868 (voice); (301) 497-5545 (fax); William_Kendall@usgs.gov

USFWS Contacts:
Hal Laskowski, USFWS Region 5 Regional Biologist, 11978 Turkle Pond Road, Milton, DE 19968, (302) 684-4028 (voice), (302) 684-8504 (fax); Harold_Laskowski@fws.gov

Socheata Lor, USFWS Region 3 Biologist, 2630 Fanta Reed Road, La Crosse, WI 54603, (608) 781-6390 (voice); (608) 783-6066 (fax); Socheata_Lor@fws.gov

Executive Summary

National Wildlife Refuges expend considerable effort manipulating water levels in impounded wetlands to benefit a variety of wildlife species, including migratory shorebirds. Managed wetlands often have the capability to provide appropriate habitat for either northward or southward migrating shorebirds, with few wetlands having the management capability to meet shorebird needs during both migrations. Whether management actions are designed to benefit spring or summer/fall migrant shorebirds, hydrologic regimes will impact other waterbirds as well, primarily through changes in invertebrate and plant communities. Thus, there is a need to understand the differential impacts of spring vs. summer/fall drawdowns on the vegetation structure, invertebrate communities, and use of impoundments by shorebirds and other waterbirds. This study will be a 3-year management experiment that will compare the impacts of early vs. late season management actions on several biological resources. Twenty-three NWRs in USFWS Regions 3 and 5 will participate, and experimental management actions will be applied to 2 wetland units at each refuge. The primary experimental treatments are an early season drawdown and a late season drawdown; a third treatment, a late season re-flood, will be applied at a small number of refuges that do not have the capability for late season drawdown. Weekly waterbird surveys will determine the response of shorebirds, waterfowl, and wading birds. Invertebrate resources will be sampled 2 times per year; plant resources 3 times per year. This study will evaluate the potential for Region 3 and 5 NWRs to provide habitat for shorebirds during their northward and southward migrations, both as a function of location and management actions. The results will identify those geographic portions of each Region that can make a significant contribution to management of selected species of shorebirds in spring or fall, and also determine the impact of this management on other waterbirds, invertebrates and vegetative communities. A particular focus of the study is understanding the trade-offs in providing habitat to different waterbird guilds through the two major drawdown timings. Finally, this study will provide the tools and analyses to facilitate adaptive management of impoundments on Refuges after this study ends, in order to continue to refine management at both the station and regional levels.

Table of Contents

Executive Summary 2
Introduction 4
Objectives 4
Background and Justification 4
Study Questions 6
Experimental Design 7
Site Selection Criteria 9
Drawdown Treatments 10
Early Season (Treatment A) 10
Late Season (Treatments B and C) 10
Vegetation Control 13
Field Methods 13
Data Collection Schedule 13
Grid Sampling within Impoundments 15
Field Protocols 16
Protocol I: Bathymetry 16
Protocol II: Waterbird Surveys 19
Protocol II: Waterbird Surveys 20
Protocol III: Waterbird Detectability 22
Protocol IV: Waterbird Activity Surveys 25
Protocol VA: Invertebrate Sampling: Water Column 27
Protocol VB: Invertebrate Sampling: Benthic 29
Protocol VC: Invertebrate Processing 30
Protocol VIA: Vegetation Sampling: Horizontal Cover 31
Protocol VIB: Vegetation Sampling: Vertical Cover 32
Protocol VIC: Vegetation Sampling: Species Composition 33
Refuge Staff Time by Activity 34
Data Handling Procedures 34
Data Sheets 34
Electronic Database and Data Entry 34
Literature Cited 35
Appendix 1. Beaufort Wind Scale 36
Appendix 2. Random Compass Bearings 37
Appendix 3. Transit Diagram 38

Introduction

Objectives

The primary objective of this project is to resolve biological uncertainty about the effects of management actions (timing of water manipulations) intended to provide optimum habitat for either southward or northward migrating shorebirds, on attainment of management goals, namely, use of managed wetlands by shorebirds and other waterbird guilds (wading birds, waterfowl). A particular focus will be on the trade-offs that occur across seasons, as mediated by changes in the invertebrate and plant communities. Secondary objectives include assessing the potential, across each region, to provide habitat for these various waterbird guilds, and developing the tools and protocols to facilitate ongoing integration of monitoring and decision-making in the management of impoundments on Refuges.

Twenty-three National Wildlife Refuges across USFWS Regions 3 & 5 will conduct a 3-year designed management experiment. Management prescriptions for the timing of water manipulation in impoundments will involve drawdowns to coincide with either spring or fall shorebird migration. The effects of this timing on waterbird communities, invertebrate communities, and vegetation communities, throughout the annual wetland cycle, will be monitored. In addition to evaluating the effects of traditional habitat management practices on attaining objectives for a suite of trust species, this study will provide monitoring protocols, databases, and analytical methods that can be used by the Refuges after the study ends for adaptive management of their impoundments.

Background and Justification

National Wildlife Refuges expend considerable effort manipulating impounded wetland habitats for a variety of wildlife species. Refuge wetland management practices are often directed at (1) mimicking the natural processes that influence wetland habitats and/or (2) altering the timing of natural processes to meet the annual life-cycle needs of important groups of wildlife. A frequently used wetland manipulation is to draw down impoundments to create shallow water and mudflat habitat to meet habitat requirements of migrating shorebirds. Timing of such drawdowns is critical to meet the migration chronology of shorebirds. Generally a single wetland can be drained to meet the migration of northward migrating shorebirds, or of southward migrating shorebirds, with few wetlands having the management capability to meet shorebird needs during both migrations in the same year. Thus, there is a need to understand the differential impacts of spring vs. fall drawdowns on the vegetation structure, invertebrate communities, and use of impoundments by shorebirds and other waterbirds.

The typical annual hydrological cycle for some natural wetlands exhibits a dynamic water regime that may benefit shorebirds, wading birds, and waterfowl. During the drawdown phase of the cycle, which typically occurs early in the growing season, mudflats are established to provide shorebird habitat, while at the same time concentrating food resources for wading birds and allowing moist soil vegetation to germinate for

subsequent waterfowl use. The hydrological cycle of impounded wetlands is controlled by management intervention, management that can be used to mimic this natural cycle or to achieve other objectives. One typical alternative includes retaining the water in the impoundment during the growing season to provide brood habitat for waterfowl or to allow a fall drawdown for southward migrating shorebirds. In this study, we wish to understand the tradeoffs of different drawdown timings in providing habitat for various waterbird guilds throughout the annual cycle. These tradeoffs, mediated by effects on vegetation and invertebrate communities, may be complex. It may be found that some drawdown schedules are compatible with establishment of desired moist soil vegetation communities and subsequent use by migrating or wintering waterfowl; some schedules may result in concentrated food resources for wading birds; whereas other schedules may have adverse impacts, such as establishment of undesirable vegetative communities.

Shorebird life-history often includes very short breeding seasons and long distance migrations between South American wintering areas and Arctic breeding grounds. Northward migrating shorebirds are subjected to a demanding schedule to arrive at Arctic breeding ground in sufficient time to complete nesting and rearing of young (Lyons and Haig 1995). As a result of the long distance migration and tight time schedule, many shorebirds undergo migratory flights which deplete energy reserves. During this time, shorebirds rely on dependable food resources at critical stopover locations along their migratory route to "refuel" for the continuation of their migration (Myers 1986, Hicklin 1987, Alerstam et al. 1992). During southward migration, shorebirds typically do not face such rigorous life-history constraints, thus the migration period is more protracted. However, shorebirds often stop over at sites providing optimum habitat during this period to refuel for continuation of migration.

Helmers (1992) identified four key habitat components required by migrating shorebirds: 1) mudflat or shallow water depths; 2) slow drawdowns during the migration period; 3) sparse vegetative cover within the wetland; and 4) abundance of an invertebrate food source. Past wetland management practices at many NWRs have not promoted the provision of quality shorebird habitat. At many refuges, water depths within managed wetlands have been too deep to promote shorebird use. Perennial vegetation such as cattail, buttonbush, burreed, marsh mallow, and others, may dominate managed wetlands at some NWRs. Generally this kind of robust vegetation provides residual cover during winter and into the next spring, thus eliminating potential mudflat habitat for shorebirds.

It is therefore unclear, especially in Region 3, if low shorebird use at some NWRs is normal, or if some refuges could make a greater contribution to this group of birds if appropriate habitats were provided. Skagen and Knopf (1994) found shorebirds were capable of quickly locating appropriate habitat during migration, even when these specific sites received little or no use by shorebirds during previous years due to inappropriate water depths. Skagen and Knopf (1993) identified that shorebirds used mid-continent wetlands opportunistically since appropriate habitat was not always available at the same sites. They identified a need for coordinated regional management efforts, to insure that appropriate habitat was available when other sites fail to provide quality habitat during some years.

In 2000-2002 a regional management experiment was conducted on 16 refuges in Region 5 (Runge et al., in preparation), focusing only on the effect of drawdowns on the use of impoundments by shorebirds during spring migration. This study found that a slow drawdown at the peak of the spring migration was superior to a fast drawdown or no drawdown in providing habitat for and attracting shorebirds. In addition, the study identified the Atlantic coastal Refuges, from Virginia to New Jersey, and including Delaware Bay, as the Refuges that had the highest potential to provide habitat to spring migrating shorebirds, but noted that other coastal Refuges and several inland Refuges in Region 5 also provide valuable stopover habitat. Species composition differed substantially within the Region, with two strong contrasts evident: coastal vs. inland, and north coastal vs. south coastal. The results of the study are being used at the regional level to refine management goals, and at the station level to refine management treatments.

While the Region 5 Shorebird Study answered a number of questions about managing for spring shorebird migration, it also opened a lot of questions about how such management fits into year-round management of impoundments for all guilds of waterbirds. Several refuges in the Northeast (e.g., Montezuma NWR) have a long history of providing habitat for *southward* migrating shorebirds—would they be better to focus on southward or northward migration, and what are the trade-offs between these two? Are the regional geographic patterns in potential habitat for fall shorebird migration different from the patterns for spring migration? Many refuges manage their impoundments to provide food for waterfowl during fall migration; is that management compatible with management for either spring or fall shorebird migration? What are the cross-seasonal trade-offs in management for the various waterbird guilds, and how are they mediated? Are the lessons learned in the Northeast (Region 5) applicable in the Upper Midwest (Region 3)? These questions and others are the motivation for the current study.

Study Questions

Through fall and winter 2004-5, five Regional meetings of USFWS and USGS personnel were held to expand and compile a list of research and management questions of interest, as well as to identify the potentials and constraints that would affect execution of this study. The final experimental design will be able to address many but not all of the questions identified. Two key features of the experimental design (see details below) will be (1) the crossover of treatments between the two impoundments in the first two years of the study, and (2) the carry-over of treatments in years 2 and 3. These experimental design features will allow us to answer several types of management questions.

Some questions are related to impacts of early vs. late season management: Is there a difference in spring vs. summer/fall shorebird use at each refuge? What are the management capabilities at each refuge to contribute to regional shorebird habitat goals? Does slow spring drawdown result in more desirable plant species, greater plant species diversity, or greater abundance and species diversity of fall migrating waterfowl than summer/fall drawdown? Other questions address impacts to waterbirds in general: Does wading bird use increase during impoundment drawdowns when food resources are

concentrated? Which impoundment manipulations will maximize overall waterbird use during an annual or bi-annual cycle? Yet other questions address carry-over effects related to specific management prescriptions: Will a late season drawdown result in sufficient plant germination and invertebrate colonization to increase habitat use by spring migrant waterfowl and shorebirds in the following year? What are the positive and negative consequences of repeated use of a specific management prescription for two consecutive years?

This study will not be able to address certain questions either due to insufficient sample size or constraints of the experimental design. In this study we will not be able to learn about the relative effectiveness of summer/fall drawdown vs. flood-up to increase shorebird use during southward migration, because there will not be enough experimental units to support a full design with three different treatments. Another question that this study will not be able to address is how the fall flooding schedule and duration of full pool conditions before the hard freeze date influences invertebrate abundance.

Experimental Design

This study is a three-year management experiment designed to provide a strong biological foundation for water management decisions throughout the annual cycle. Because few impoundments are capable of providing shorebird habitat during both the spring and summer/fall migrations, the overall objective of the study is to compare the impacts of early vs. late season drawdowns on shorebirds and other waterbirds, invertebrate populations, and plant communities. Aspects of the experimental design will also measure carry-over effects resulting from consecutive application of early or late season management actions across years.

Three different management actions (treatments) have been defined for this study: an early season drawdown, a late season drawdown, and a late season re-flood. The early and late season drawdowns are the preferred treatments, with the late season re-flood included as an option for refuges where late season drawdowns are not feasible. The intention of each management action is to provide foraging habitat during the peak of northward or southward shorebird migration at each refuge. While application of the treatments will be timed to provide foraging habitat for shorebirds, monitoring components of the study will include not only shorebirds, but also waterfowl and wading birds, plant communities, and invertebrate populations at various times of the year.

Two impoundments will be used at each refuge; each impoundment will be subjected to a specific sequence of treatments. Treatments for the first year were assigned randomly. In the first year (2005), one impoundment will be managed using the early season drawdown, while the other impoundment will be managed using the late season treatment (drawdown or re-flood depending on capability). In the second year (2006), the treatments will be reversed. This cross-over feature is important because it allows each impoundment to act as its own control. In the final year (2007), the treatments from the second year are repeated; this repetition allows us to determine if there are specific carry-over effects that result from using the same treatment for two consecutive years. The

specific assignments for each impoundment and for each year of the study are found in Table 1.

Table 1. Spring (A) and Summer/Fall (B or C) Management Sequences for each refuge and impoundment. Each refuge is assigned a three letter code, the alpha part of Visit ID (AAAØØØ) for data sheets.

Refuge		Impoundment	ImpCode	2005	2006	2007
Region 3						
Agassiz NWR	AGZ[1]	Pool 21	AGZp21	B	A	A
		Dahl	AGZdahl	A	B	B
Crab Orchard NWR	CRB	Area 41 A	CRB41a	A	B	B
		Area 41 B	CRB41b	B	A	A
DeSoto NWR	DES	Red Barn East	DESrbe	B	A	A
		Red Barn West	DESrbw	A	B	B
Hamden Slough NWR	HAM	Eagle Pond	HAMep	A	B	B
		Hesby Wetland	HAMhes	B	A	A
Mingo NWR	MGO	9 South	MGO9s	A	B	B
		8 East	MGO8e	B	A	A
Minnesota Valley NWR	MNV	Chaska Lake	MNVch	B	A	A
		Fisher Lake	MNVfl	A	B	B
Patoka NWR	PTK	Cane Ridge A	PTKcra	A	B	B
		Cane Ridge D	PTKcrb	B	A	A
Squaw Creek NWR	SQC	MS Unit 1	SQCu1	A	C	C
		MS Unit 2	SQCu2	C	A	A
Two Rivers NWR	TWO	Upper Calhoun	TWOuc	A	B	B
		Lower Calhoun	TWOlc	B	A	A
Region 5						
Back Bay NWR	BKB	B Pool	BKBb	A	B	B
		C Pool	BKBc	B	A	A
Blackwater NWR	BLK	Pool 1	BLKp1	B	A	A
		Pool 4	BLK4a	A	B	B
Bombay Hook NWR	BMH	Raymond Pool	BMHrp	A	B	B
		Shearness Pool	BMHsp	B	A	A
Chincoteague NWR	CHN	South Wash Flats	CHNswf	C	A	A
		B South	CHNbs	A	C	C
Erie NWR	ERI	Reitz Pond	ERIrp	A	B	B
		Pool 4	ERIp4	B	A	A
Great Meadows NWR	GRM	Upper Pool	GRMup	B	A	A
		Lower Pool	GRMlp	A	B	B
John Heinz NWR	JHZ	Tract 5	JHZt5	B	A	A
Montezuma NWR	MNT	Benning Marsh	MNTbm	B	A	A
		Mays Point Pool	MNTmp	A	B	B

Moosehorn NWR	MSH	Upper Maguerrewock	MSHum	B	A	A
		Middle Magerrewock	MSHmm	A	B	B
Parker River NWR	PKR	Stage Island Pool	PKRsi	A	B	B
		Bill Forward Pool	PKRbfp	B	A	A
Patuxent NWR	PTX	Knowles 1	PTXk1	B	A	A
		Knowles 2	PTXk2	A	B	B
Prime Hook NWR	PMH	Unit III	PMH3d	A	B	B
		Unit IV	PMH4a	B	A	A
Supawna Meadows NWR	SUP	Tract 11	SUPt11	A	B	B
Wallkill River NWR	WAL	Liberty 2	WALl2	B	A	A
		Liberty 5	WALl5	A	B	B
[1] Three letter alpha code used to construct Visit ID on data sheets						

Site Selection Criteria

Impoundments selected for the study were chosen using the following criteria:

1. If surrounded by tall forest habitat, the impoundment should be greater than 6 ha (15 ac) in size. However, if surrounded by other marsh habitats or low vegetation, the unit may be as small as approximately 4 ha (10 ac) in size. The paired impoundments at each refuge should be similar in size.
2. Vegetative structure should be sparse, or of a type that will mat down during winter flooding (e.g. *Panicum*, millet, *Cyperus*), so as to provide a mudflat habitat during the spring shorebird migration (May-June).
3. Refuge must have the ability to slowly drain the unit during the course of the spring and fall migration periods.
4. Bottom topography of the unit should be a gradual slope, so as to provide large areas of mudflat or shallow water depths.
5. The impoundments should not normally be subjected to mosquito control actions, since these actions can significantly influence availability of aquatic invertebrates as a food source for waterbirds. If a human health emergency necessitates mosquito control, the refuges selected should be amenable to using a BTI formulation for control.

Most of the managed wetlands selected for this study are between 6 ha (15 ac) and 20 ha (50 ac). In some cases, impoundments are too large for adequate monitoring, or present other conditions that make it difficult to include the entire impoundment as the study area. In these cases, a specific portion of the impoundment will be designated as the study area and all management actions will be timed to affect this specific area according to the experimental design. Waterbird surveys, and invertebrate and plant sampling, will occur only in the designated study area within the impoundment.

Drawdown Treatments

Early Season (Treatment A)

The main feature of Treatment A (Fig. 1) will be an early season drawdown, timed to coincide with the peak of northward shorebird migration. Dates for the start of the drawdown and other management actions will vary based on migration phenology and other biological events. The goal of the drawdown is to slowly and continuously expose new mudflat and shallow water habitats. The drawdown will be initiated prior to arrival of migrants (again, calendar dates will vary) and maintained throughout the passage of birds. The impoundment will be drained, or at lowest water levels possible, by the end of spring shorebird migration, early June in most locations. Water levels will remain low and allow the possibility of vegetation manipulation using heavy equipment if necessary (see "Vegetation Control" below). Water will be applied before the beginning of fall waterfowl migration (i.e., water should be available when Blue-winged Teal [BWTE] arrive) and water levels will be gradually increased during fall. The impoundment will be brought to full-pool level before the freeze date for the particular location (to protect invertebrates, amphibians, etc.) and remain at full pool until the following year.

Figure 1. Treatment A: Spring Drawdown

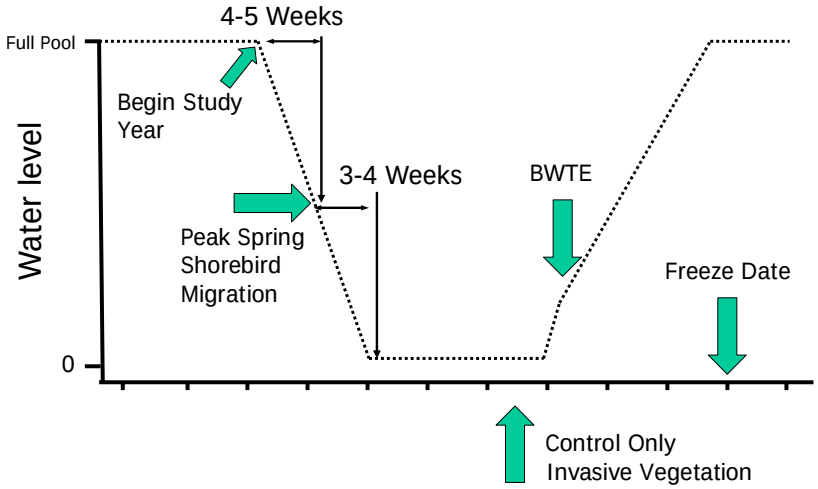

Late Season (Treatments B and C)

The intent of the late season management prescription (Treatment B or C) is to provide summer/fall shorebird habitat. The strong preference in the experimental design is for Treatment B (drawdown), because of *a priori* belief that invertebrate populations will be more abundant under this treatment than under Treatment C (re-flood). Most Refuges in the study have indicated that Treatment B is possible, at least in a majority of years. However, partial controllability of management outcomes and inherent variation of natural systems may make it difficult or impossible to use Treatment B in some years.

As a back-up plan to provide shorebird habitat during summer/fall migration, it may be possible to conduct a late season re-flood (Treatment C). For most Refuges, Treatment C should be used only in the event that an impoundment intended for Treatment B fails to hold water until the late summer. In subsequent years the impoundment should undergo the treatment called for by the experimental design. There are a few Refuges (identified in Table 1) that have indicated Treatment B is never possible; they will proceed with Treatment C.

Treatment B: Summer/Fall Drawdown

The main feature of Treatment B will be a late season drawdown, timed to coincide with the peak of southward migration of adult shorebirds. Treatment B will also include a partial drawdown early in the year to provide habitat for waterfowl during their spring migration; water levels will be lowered to an average depth of 10-12" during waterfowl passage. Following this partial drawdown for northbound waterfowl, water levels will be returned to full pool until just prior to the arrival of the first southbound shorebirds, mid-July in many locations. The summer/fall migration of shorebirds is protracted and may extend over 14 weeks; adults precede juveniles, which may straggle through for 6-8 weeks. Many impoundments do not have the management capability to provide a continuous supply of shorebird habitat over such extended periods. The slow drawdown will be initiated before the arrival of the first birds (largely adults) and be maintained throughout the period of *adult* migration. Under this protocol, many refuges will be able to provide foraging habitat for all adult shorebirds and most juveniles during migration. The impoundment will be flooded before the freeze date and maintained at full pool until the beginning of the next annual cycle.

Figure 2. Treatment B: Summer/Fall Drawdown

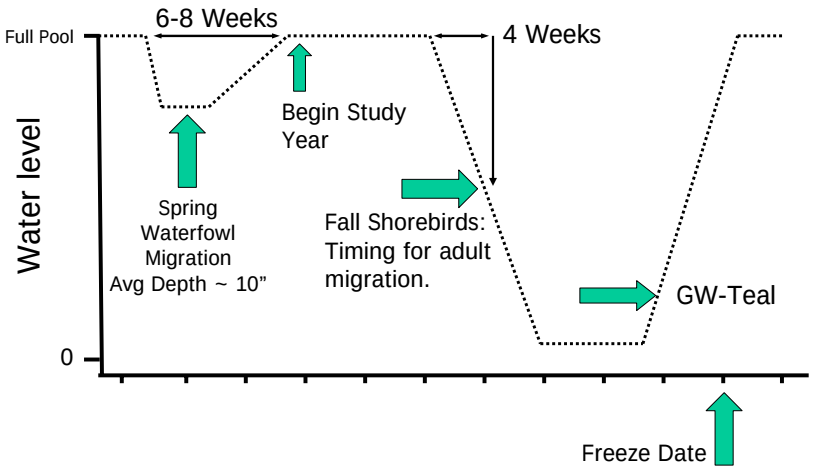

Treatment C: Summer/Fall Re-flood

Treatment C (Fig. 3) is included primarily as a back-up plan in the event of uncontrollable loss of water too early in the season, and secondarily for impoundments that do not have the management capability for a late season drawdown. Impoundments managed with Treatment C will begin the annual cycle with a partial drawdown during spring waterfowl migration, similar to Treatment B, and will continue the pattern of Treatment B as long as possible. If, because of evaporative water loss during spring and summer, it is clear that an impoundment will not have enough water to conduct a slow, late-season drawdown timed to coincide with the peak of summer/fall shorebird migration, Treatment C should be adopted. In this case, shorebird habitat will be created using a re-flood before the arrival of the first southbound shorebirds. Preparation for the re-flood may include shallow disking wherever possible to reduce vegetative cover and produce sparsely vegetated mudflats similar to conditions anticipated with Treatment B. Mudflat and shallow-water habitats will be maintained during shorebird passage. Water-levels will be increased before the arrival of early, southbound waterfowl, and returned to full-pool by the freeze date.

Note for those few Refuges that know in advance they cannot achieve Treatment B: water levels should be maintained through the spring and summer as long as possible, up until the point that the impoundment needs to be drained to allow access for vegetation control. That is, just because the water is sure to be lost, a spring drawdown should not be conducted deliberately. It is not necessary, however, to undertake expensive measures, like pumping, to maintain water levels that will eventually be lost.

Figure 3. Treatment C: Summer/Fall Re-flood

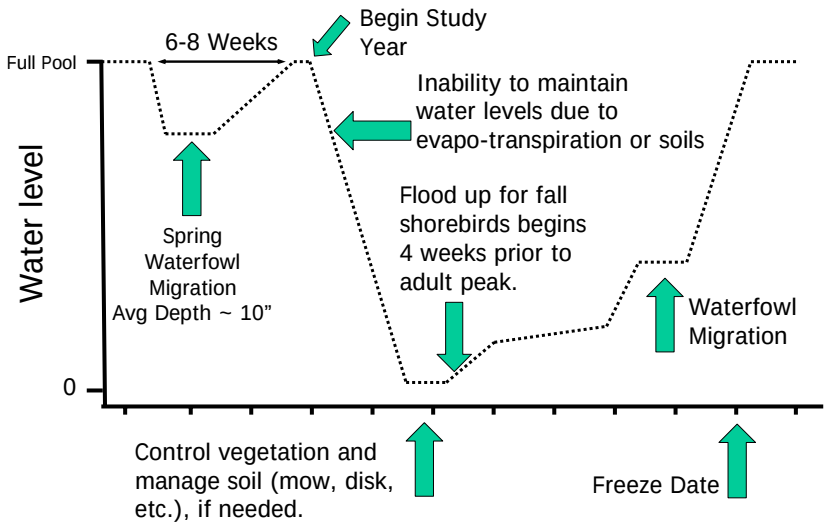

Vegetation Control

Experimental water level manipulations, especially Treatment A, have the potential to produce substantial growth of some wetland plant species normally considered invasive or undesirable, including *Phragmites*, purple loosestrife, cocklebur, etc. Because one of the objectives of this study is to quantify plant response to early and late season drawdown, vegetation control during the study will be limited to severe invasive species problems. Please consult with the study design team about the extent and nature of vegetation manipulation before vegetation management actions are initiated.

Treatment B is not likely to result in any invasive plant growth because the drawdown occurs much later in the growing season, with reduced time for germination and growth.

Treatment C may require some vegetation manipulation if substantial vegetation growth has occurred following a natural decrease in water levels. Shallow disking in this case would be used to make sure that the shorebird habitat created under Treatment C would be similar to the sparsely vegetated mudflats that are anticipated under Treatment B. It is not necessary to consult with the study design team to initiate vegetation manipulations of this sort as part of Treatment C.

Field Methods

Data Collection Schedule

Schedules for management actions and data collection will vary across refuges based on geographic location, growing season length, migration phenology, and timing of other biological events. Table 2 presents average dates for significant biological events that will determine data collection schedules in many cases. The bathymetry data collection will be done only once, preferably in the first year before drawdown when the impoundment is at full pool; the bathymetric data can be applied in all years of the study. Weekly waterbird surveys will cover the majority of the annual cycle in order to cover waterfowl migrations, shorebird migrations, and wading bird breeding seasons. Invertebrates and vegetation cover will be measured twice each year, during the peak of spring and summer/fall shorebird migrations. Vegetation species composition will be determined once each year near the end of the growing season. Finally, detectability of shorebirds and waterfowl will be measured three times during the southward migration. *Note that the study year begins* with spring shorebird migration and ends with spring waterfowl migration in the following calendar year. Data collection will begin with the spring shorebird migration in 2005 and end with spring waterfowl migration 2008.

Table 2. Average dates for significant biological events. Management and sampling is tied to phenological events during the annual cycle. Vegetation survey # 3 is conducted near the end of the growing season. "V" and "I" refer to vegetation and invertebrate sampling periods, respectively.

Refuge	Average Ice Free Date	Peak Spring Waterfowl Migration	Peak Spring Shorebird Migration (V, I)	Peak Fall Adult Shorebird Migration (V, I)	Vegetation Sample #3 (V)	Average Frost Date	Peak Fall Waterfowl Migration	Average Freeze Date
Region 3								
Agassiz NWR	20 APR	30 APR	25 MAY	5 AUG	1 SEP	15 SEP	1 OCT	1 NOV
Crab Orchard NWR	10 MAR	15 MAR	25 APR	20 AUG	1 OCT	15 OCT	15 NOV	1 DEC
DeSoto NWR	15 MAR	21 MAR	10 MAY	15 AUG	15 SEP	1 OCT	15 NOV	21 NOV
Hamden Slough NWR	10 APR	30 APR	20 MAY	5 AUG	1 SEP	15 SEP	1 OCT	1 NOV
Mingo NWR	10 MAR	15 MAR	15 APR	25 AUG	1 OCT	15 OCT	15 NOV	1 DEC
Minnesota Valley NWR	1 APR	10 APR	20 MAY	10 AUG	1 SEP	15 SEP	23 OCT	20 NOV
Patoka River NWR	10 MAR	15 MAR	25 APR	20 AUG	1 OCT	15 OCT	15 NOV	1 DEC
Squaw Creek NWR	15 MAR	15 MAR	10 MAY	15 AUG	15 SEP	1 OCT	15 NOV	25 NOV
Two Rivers NWR	10 MAR	7 MAR	7 MAY	15 AUG	1 OCT	15 OCT	15 NOV	1 DEC
Region 5								
Back Bay NWR	10 FEB	15 APR	15 MAY	20 AUG	1 OCT	15 OCT	30 OCT	5 JAN
Blackwater NWR	1 MAR	1 MAR	15 MAY	15 AUG	1 OCT	15 OCT	15 NOV	1 DEC
Bombay Hook NWR	1 MAR	10 MAR	20 MAY	15 AUG	1 OCT	15 OCT	15 NOV	1 DEC
Chincoteague NWR	15 FEB	15 FEB	15 MAY	15 AUG	1 OCT	15 OCT	15 NOV	1 JAN
Erie NWR	20 MAR	20 APR	5 JUN	10 AUG	5 SEP	1 OCT	15 NOV	10 DEC
Great Meadows NWR	25 MAR	15 APR	25 MAY	10 AUG	5 SEP	1 OCT	30 SEP	15 DEC
John Hienz NWR	10 MAR	5 MAR	25 MAY	15 AUG	1 OCT	15 OCT	15 NOV	25 NOV
Montezuma NWR	20 MAR	20 APR	30 MAY	10 AUG	5 SEP	1 OCT	31 NOV	10 DEC
Moosehorn NWR	5 APR	10 APR	30 MAY	5 AUG	1 SEP	15 SEP	25 SEP	10 DEC
Parker River NWR	25 MAR	15 APR	25 MAY	10 AUG	5 SEP	1 OCT	1 OCT	15 DEC
Patuxent NWR	1 MAR	30 MAR	15 MAY	15 AUG	1 OCT	15 OCT	20 NOV	31 DEC
Prime Hook NWR	1 MAR	10 MAR	20 MAY	15 AUG	1 OCT	15 OCT	31 OCT	10 DEC
Supawna Meadows NWR	10 MAR	1 MAR	25 MAY	15 AUG	1 OCT	15 OCT	15 NOV	1 DEC
Wallkill River NWR	15 MAR	20 MAR	25 MAY	15 AUG	15 SEP	1 OCT	20 OCT	15 DEC

Timeline of Monitoring and Management Actions

Major monitoring programs and sampling times are depicted in Figure 4. Note that the exact times of activities at each refuge will depend on local phenology. Refer to Table 2.

Figure 4. Time Line of Management Activities and Surveys

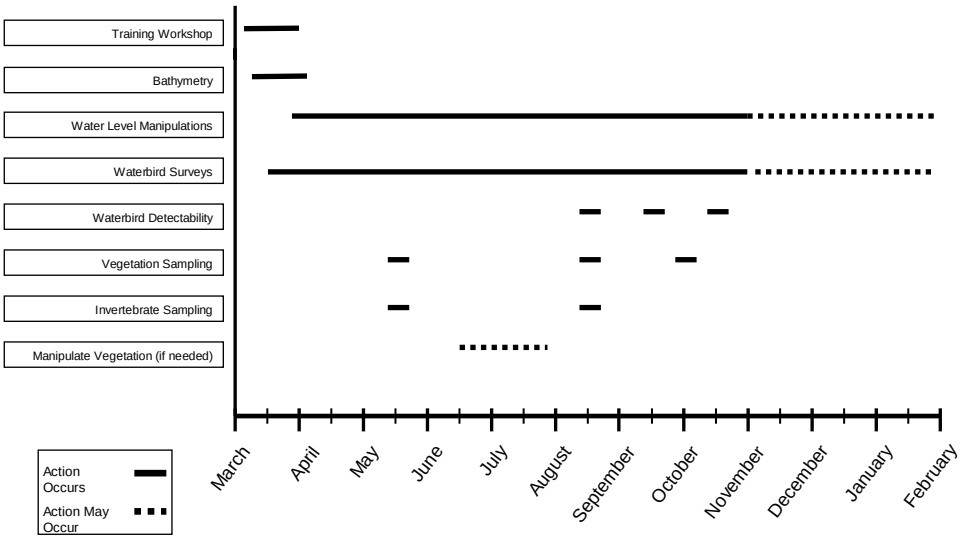

Grid Sampling within Impoundments

Invertebrate and vegetation sampling within impoundments will be conducted using a systematic sampling grid constructed for each impoundment. The sampling grid will be created in a GIS by the FWS Regional Refuge Biologist's office. To facilitate creation of the sampling grid, refuges will provide a GIS shape file of each impoundment to Susan Talbott (Susan_Talbott@fws.gov). Within a GIS, a random starting location within the impoundment and a random orientation for the grid will be chosen, and a sampling grid will be superimposed on each impoundment. Grid spacing will be adjusted to create 32 intersections (sampling points) within each impoundment, with grid spacing ultimately determined by impoundment size and shape. During each sampling period, field crews may visit the 32 sampling points in any order that is convenient. Some grid points may not be suitable for sampling and should be discarded: points outside the impoundment, on terrestrial islands within the impoundment, on levee, etc. The Regional Refuge Biologist's office will provide each refuge with (1) a map showing sampling grid points and quadrats, (2) a digital copy of the map, and (3) a list of UTM coordinates (NAD83) for each sampling point. Sampling point coordinates may be imported to a GPS receiver to facilitate locating sampling points in the field. A GIS shapefile of sampling grid and additional GIS layers may also be available.

Field Protocols

Protocol I: Bathymetry

General Methods: Each refuge will produce a basin contour map of study impoundments using the bathymetry protocol outlined below. The method involves measuring the depth of the impoundment across a grid of points *when the impoundment is at full pool* and water levels have been stable for at least a few days before the survey. The basin contour map will allow us to estimate the amount of mudflat and proportions of the impoundment in various water depth classes throughout the drawdown.

This procedure *requires* the use of a highly-accurate GIS unit, such as a Trimble GeoXT or GeoXM, or similar. Recreational handheld GPS units made by Garmin, Magellan, and others are not likely to be accurate enough (± 1 m). Refuges which do not have such units should arrange to borrow one from regional staff or a nearby refuge if possible.

In the field, GPS locations and water depth measurements will be collected in a spatial arrangement approximating a grid; this does not require the creation of a grid of sampling points ahead of time with a GIS. The suggested grid spacing in Table 3 is a guide to indicate how frequently data points will be collected in the field. The resulting file of GPS points will resemble a grid once imported to GIS (see Fig. 5). It may be possible, depending on the GPS unit used, to enter water depth measurements directly into the GPS unit as the data points are collected. This will reduce data entry required after field work and the likelihood of data entry errors. In addition, field crews are encouraged to record water depth data on the paper data sheets as well, as a hard-copy back-up.

Goal: Create a basin contour map that will provide estimates of the quantity of mudflat and shallow water habitat for any given water level (measured at a permanent water gauge).

Personnel: Basin contour mapping will require two individuals.

Equipment: Highly accurate GPS receiver (e.g., Trimble GeoXM or GeoXT, or similar), meter stick or sounding line marked in cm, Bathymetry data sheet. A disc of ¼ inch plywood or similar material may be attached to the bottom of the meter stick to facilitate depth measurements over unconsolidated bottoms.

Timing: Once during the study, preferably early in the first spring when the impoundments are at full pool. <u>Measurements should be made on a calm day</u> following a period of stable water levels to be sure that water is evenly distributed within the impoundment. Permanent water gauge readings should be made at the beginning and end of each day.

<u>Steps</u>

Before starting, work with regional staff to obtain the appropriate GPS unit, if necessary, or prepare your GPS unit to collect bathymetry data for your impoundments. If you are

not familiar with the GPS technology you are using, regional staff can provide detailed step-by-step instructions for its use.

1. Record the water level at the permanent water gauge at the start of each day.
2. Starting in a corner of the impoundment,
    a. Collect a point with the GPS. GPS points are automatically numbered in sequence as they are collected in the field. A Point ID and UTM coordinates will be stored in the unit.
    b. (2) Record the water depth (cm) using the meter stick or the sounding line. Water depth can be typed into the GPS unit directly and/or written on the data sheet. If entering the water depth data directly into the GPS unit, the use of the data sheet as a hard-copy backup is optional, but highly encouraged.
3. When using the data sheet, Point ID is simply a sequentially assigned number given to the points in the order they are collected (1, 2, 3, etc). Thus, written depth data should be collected in the same order as GPS data points, so that the data corresponds correctly.
4. Continue along the edge of the impoundment and collect a second data point at the specified distance from the first point (Table 3).
5. Continue in this manner along the entire edge of the study area, collecting data points at the distance specified.
6. As necessary, collect additional sampling points along each transect whenever there is a significant change in slope. For example, if a low spot or ditch is encountered, collect a point at the edge of it, at its lowest point, and at a point where elevation rises again. *These extra points are critical for accurate mapping of the basin contour.*
7. Record comments for impoundment edge, ditch, change slope, top slope, bottom slope, etc.
8. Once the opposite corner of the impoundment is reached, move along the perpendicular edge of the impoundment the distance specified in Table 3.
9. Collect a data point, as described, then begin traveling back along a transect that is parallel to the first transect.
10. Collect data points at the specified distance, and at additional points as necessary to capture changes in slope.
11. Continue to work your way back and forth across the impoundment, collecting data at the specified distance, and along transects that are similarly spaced apart.
12. If areas with a significant change in slope occur between transects, data points should be collected in those locations as well. (See Fig. 5 for a diagram of this data collection process.)
13. Once the entire impoundment has been sampled, record the water level at the permanent water gauge at the end of each day.

Following the collection of bathymetry data, send the point shapefiles created by the GPS unit and copies of data sheets to: Susan Talbott, Assistant Regional Refuge Biologist, Prime Hook NWR, 11978 Turkle Pond Rd, Milton, DE 19968, (302) 684-4423. Be sure to indicate your UTM datum (e.g. NAD83). Regional staff can assist you in retrieving the shapefiles from the GPS unit if necessary.

Table 3. Proposed grid spacing for bathymetric survey for each station and impoundment.

Station	Impoundment Name	Grid Spacing	Impoundment Name	Grid Spacing
AGASSIZ NWR	Dahl - 4 ac open water	25m	Pool 21 - 8 ac open	25m
BACK BAY NWR	B Pool	30m	C Pool	30m
BLACKWATER NWR	Pool 1	Completed?	Pool 4	Completed?
BOMBAY HOOK NWR	Raymond Pool	50m	Shearness Pool	50m
CHINCOTEAGUE NWR	B-South	100m	South Wash Flats	100m
CRAB ORCHARD NWR	A41a	30m	A41b	30m
DESOTO NWR	Red Barn W	30m	Red Barn E	30m
ERIE NWR	Reitz	25m	Pool 4	25m
GREAT MEADOWS NWR	Upper Pool	50m	Lower Pool	50m
HAMDEN SLOUGH NWR	Hesby	Completed	Eagle Pond	Completed
JOHN HEINZ AT TINICUM NWR	Tract 5	75m		
MINGO NWR	9north	30m	9south	30m
MINNESOTA VALLEY NWR	Chaska	30m	Rice Lake	50m
MONTEZUMA NWR	Portion of May's Point Pool	30m	Benning Marsh	30m
MOOSEHORN NWR	Upper Maguerrewock	30m	Middle Maguerrewock	30m
PARKER RIVER NWR	Stage Island	30m	Bill Forward Pool	30m
PATOKA NWR	Cane Ridge - A	Completed?	Cane Ridge - D	Completed?
PATUXENT NWR	Knowles 1	Completed?	Knowles 2	Completed?
PRIME HOOK NWR	Unit III	50m	Unit IV	75m
SQUAW CREEK NWR	Moist Soil Unit 1	30m	Moist Soil Unit 2	30m
SUPAWNA MEADOWS NWR	Tract 11	25m		
WALLKILL RIVER NWR	Unit 2	30m	Unit 5	30m
TWO RIVERS NWR	Upper Calhoun	30m	Lower Calhoun	30m

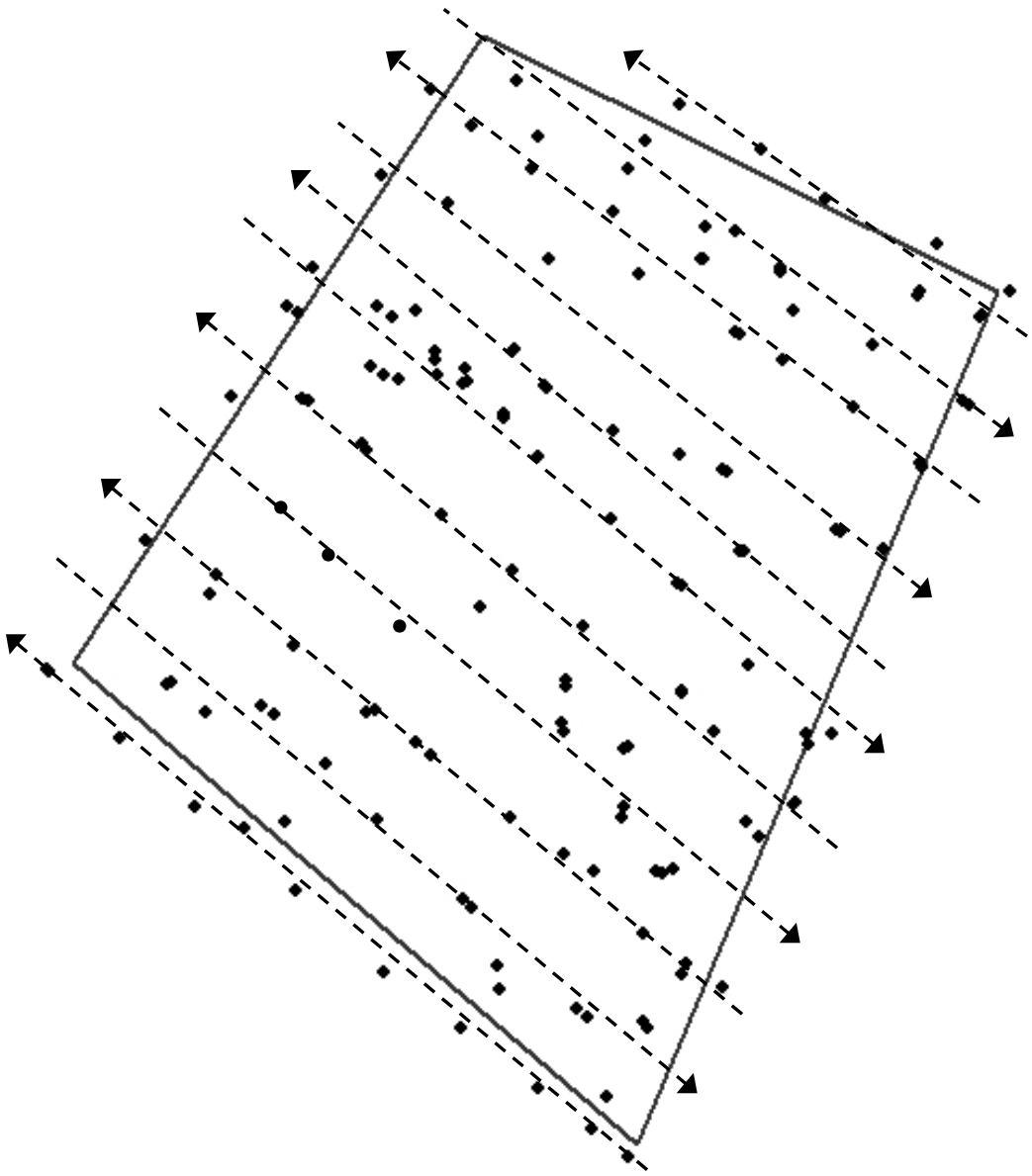

Figure 5. Example data from bathymetry work at Prime Hook NWR, illustrating the arrangement of parallel data collection transects approximately 50 meters apart, and the collection of data points along the transects. Note that data points are not always spaced 50 meters apart; some are clustered and/or located between transects, as necessary, to capture areas with changes in slope.

Protocol II: Waterbird Surveys

Goal: Weekly measurement of the total number of waterbirds (shorebirds, waterfowl, and wading birds) present on each impoundment, broken down to species level where possible.

Personnel: One to two individuals to conduct all Waterbird Surveys during the study period. To minimize observer effects in the data, one person (or team) should conduct all of the surveys, if possible. A two-person team is ideal, as the survey can still be conducted with minimal bias in the event that one person is sick or unavailable on a particular survey day.

Equipment: Good optical equipment (binoculars and spotting scope), Waterbird Survey data sheet.

Steps: (see Waterbird Survey Data Sheet)

1. Use a coin toss to decide which impoundment to survey first. Record Visit ID and survey conditions. Visit ID is a combination of a three letter code for each refuge and a 3 digit, sequential visit number. Each visit to an impoundment should have a unique Visit ID (see Visit ID Tracking Sheet). Surveys that are conducted simultaneously receive the same Visit ID. For example, the Waterbird Survey and Waterbird Activity Survey are usually conducted at the same time for a given impoundment and would receive the same Visit ID. Similarly, the Vegetation Cover Survey and Invertebrate Survey should be done at the same time and receive the same Visit ID. Three letter codes for each refuge are listed in Table 1.

2. Surveys should be conducted on a weekly basis throughout March-November in order to cover the periods of spring and fall waterfowl migration, spring and summer/fall shorebird migration, and wading bird breeding seasons. It may be easiest to designate a particular day of the week for the surveys, but this can serve as a guideline, not as a rule.

3. Surveys should not be conducted during severe inclement weather such as heavy rain, fog, or strong winds, or any other conditions that may strongly influence waterbird use of habitat or the observers' ability to see and identify the birds. Record wind speed to the nearest 0.1 MPH using a hand-held anemometer if one is available. If an anemometer is not available, use the Beaufort Wind Scale (Appendix 1) and estimate wind speed to the nearest 1.0 MPH.

4. At coastal refuges, the surveys should be taken within two hours of high tide, to control for the effect of the tidal state of nearby mudflats. At inland refuges, surveys should be taken in the morning hours, from 1 hour after sunrise until 12 PM. (Try to choose a time period with minimal ingress/egress from the impoundment if possible.) There is no time limit for surveys; the observers should take whatever time they need to obtain their best count of birds in the impoundment.

5. The order of observation for the 2 impoundments should be randomly selected each week. Observation of the two impoundments should be made within as short a time as possible of one another.

6. Choose a number of observation points along dikes or other easily accessed locations. There should be enough points to afford a complete view of the impoundment. The observers should know the boundaries of the study area within the impoundment. (If the observers are not refuge personnel, they should walk the boundaries prior to the start of data collection and review maps delineating the specific study areas with refuge personnel.)

7. Identify and count all waterbirds in the impoundment (or the study area within it). NOTE: Keep separate tallies for (1) open, unvegetated areas and (2) vegetated or partially obscured areas. The "vegetated areas" are defined as areas where detectability is not 100%. To some degree, this is a judgment call on the part of the observers, but it should represent the point at which they aren't confident they were able to see all the birds present. Counts from vegetated areas will be adjusted for detectability after Protocol III has been completed.

    a. Identification of some shorebird species can be difficult, especially for similar species such as Long-billed and Short-billed Dowitchers (*Limnodromus* spp.), Greater and Lesser Yellowlegs (*Tringa* spp.) and some of the smaller species when viewed at long distances, such as Semipalmated and Least Sandpipers,. For this reason, on occasion, these species may be lumped together during surveys. However, during those times when birds are close to observers or optimum light conditions allow, these birds should be identified to species.
    b. Where possible, shorebirds and waterfowl should be identified and counted individually. In the case of large flocks, however, flock size and composition may need to be estimated. First estimate the entire flock size, then estimate the fraction of each species within the flock to arrive at estimates by species.
    c. Be careful of double counting individuals, particularly between observation points. When in doubt about whether an individual bird was already seen, err on the side of <u>not</u> double-counting.

8. In addition to counting the wading birds within the impoundment proper, identify and record the number of wading birds in the effluent area of all water control structures (WCS) that may be used to dewater the impoundment.
    a. In the "Effluent (Count 2)" column of the Waterbird Survey data sheet, record the number of wading birds outside the impoundment within 50 meters of the WCS. It may be necessary to count the number of birds in this sampling area from a distance before approaching the WCS if the birds are likely to flush upon your approach.
    b. If there is more than one water control structure (WCS), Count all structures that could potentially be used during drawdowns. It is not necessary to survey water control structures that are never used to dewater the impoundment.
9. Continue with Protocol IV Waterbird Activity Survey.

Protocol III: Waterbird Detectability

Goal: Estimate the number of birds using an impoundment, when vegetation in the impoundment creates a significant detectability bias.

Strategy: Stratify the impoundment into open and vegetated areas. Conduct flushing counts in four quadrats located in vegetated areas. Estimate detectability in vegetated areas (detectability in open areas is assumed to be 1). Correct counts for detectability bias.

Timing: Three times—once during peak fall shorebird migration (~mid-August); once during peak fall waterfowl migration (~mid-October); and once during the period when juvenile shorebirds and teal overlap (~mid-September).

Personnel: 6-8 people: the two regular observers, two additional observers to help them count the flushed birds, and 2-4 people to flush the birds.

Equipment: binoculars, spotting scope, and Detectability Survey data sheet

NOTE: These methods are still in the draft stage. We intend to do some pilot testing of the flushing counts during the spring and summer, and expect to send some revised advice about methods before August. In addition, we will be asking for a few Refuges to volunteer to do some more intensive detectability sampling to help us test the assumptions of the method.

Methods:

1. All counts of birds throughout the year need to be stratified into counts in open areas and counts in vegetated areas. The "vegetated areas" are defined as areas where detectability is not 100%. To some degree, this is a judgment call on the part of the observers, but it should represent the point at which they aren't confident they were able to see all the birds present. Note that it is not a problem if the "vegetated" area changes over the course of the season—just tally the birds according to whether they were in the open or vegetated areas.

2. We will assume that spring and early summer counts are almost entirely in open areas, so detectability adjustments do not need to be made. One detectability adjustment will be made for fall shorebirds, and one for fall waterfowl, with a third in-between sampling occasion to (a) estimate the detectability for birds not found during the other sampling occasions (e.g., teal), and (b) help elucidate the effect of changing vegetation conditions on detectability.

3. A map of the impoundment will be provided, marked with a grid of points for the vegetation and invertebrate sampling. The quadrats formed between these grid points will be randomly labeled. During the week prior to the second vegetation sampling (at peak of fall shorebird migration), for each quadrat, determine if it is

largely open or largely vegetated (that is, it is obscured enough that a good portion of birds won't be detectable). Choose the first four quadrats that are vegetated (working through them in the order indicated). Mark these four quadrats on the map.

4. During the second vegetation sampling session, mark the corners of the four quadrats with PVC posts that are tall enough to be visible from the dike or observation points.

5. The flushing count can be done at the next bird count, or at another time when the observers and other staff are available. First, the observers should count the birds in the four quadrats, *using the normal procedures for observation*. The initial count is broken down into open areas and vegetated areas similar to the normal bird survey procedures.

6. With the observers watching carefully from appropriate observation points, a team of flushers should enter the impoundment by whatever means seems safe and easy (hip boots, canoe, air boat, marsh master!, etc.). The flushers should proceed to each quadrat in pre-arranged order and systematically work from one side of the quadrat to the other. The goal is to flush the birds off the ground and above the vegetation, so they can be counted and recorded by the observers.

7. The "flushers" should also keep track of birds and should reconcile their observations with those of the observers on the dikes. The totals might include birds that never flushed, species identifications that the flushers were able to make, etc.

8. During the flushing, if some birds cannot be identified to species, record as specific an identification as possible (e.g., UNDU for unidentified duck, PEEP for unidentified peeps, etc.).

9. If there is concern that the flushing of one quadrat will also flush the birds in other quadrats, the quadrats can be sampled separately on different days, or at times separated enough to allow the birds to settle back down. Make sure to recount the birds from the observations points first.

10. The ratio of birds counted initially to birds flushed provides an estimate of detectability in the vegetated areas, and may be different for different species of birds. This correction will be applied to the fall shorebird counts in vegetated areas, then this corrected number will be added to the counts in the open areas.

11. The same quadrats can be used for the two subsequent sampling periods. Repeat the flushing method in those same four quadrats (a) during the period of overlap of late (juvenile) shorebird migration and early waterfowl (teal) migration, and (b) sometime near the peak of fall waterfowl migration. The correction factor(s)

derived will be applied to the waterfowl counts throughout the fall in the same manner as described above.

Protocol IV: Waterbird Activity Surveys

Goal: Weekly measurement of an index of activity of three waterbird guilds: waterfowl, shorebirds, and wading birds.

Personnel: See Protocol II.

Equipment: Spotting scope, compass, a random numbers table (random permutations of the numbers 5 through 180 in steps of 5), angle fixture to convert scope into transit (*optional*), and Waterbird Activity Survey data sheet.

Steps: (see Waterbird Activity Data sheet)

1. The timing, order of observation, and location of observation sites are the same as for the Waterbird Surveys (Protocol II). On the Waterbird Activity Data sheet, use the same Visit ID as the Waterbird Survey if the two surveys are completed at the same time.

2. Use an observation point that provides a view of all waterbirds in the impoundment. (If no such observation point exists, see step 5 below.)

3. This protocol requires a scan sample of each waterbird guild. If there are less than 60 individuals of any waterbird guild, assess the activity of each bird and record the number feeding and the number "resting/other".
   a. Shorebirds should be classified as feeding if they are probing, pecking, searching, or actively moving about looking for food; waterfowl should be classified as feeding when tipping up or diving; wading birds when stalking or ambushing prey. All waterbirds should be classified as resting/other if they are continuously stationary, if their heads are tucked under their wings, or if they are standing on one foot (shorebirds). Birds conducting any other activity not classified as feeding, such as preening, should also be identified as resting/other.

4. If there are more than 60 individuals of any waterbird guild in the impoundment, a random sample of size 60 should be taken of each guild, and the activity of those 60 birds recorded. Procedure to select a random sample of 60:
   a. From the observation point, determine the compass bearing along the left or right shore of the impoundment, whichever provides the easiest reference.
   b. Select a number from the random number table (Appendix 2) and add it to (subtract it from) the compass bearing of the left (right) shore. This sum represents a random compass bearing. If the direction does not fall over the impoundment, select the next random number.
   c. For each random direction, point a spotting scope along that compass bearing. You may find it helpful to use the apparatus designed by Lewis Dumont that converts a scope into a transit (see Appendix 3).
   d. Find the first 15 birds in each guild within the field of view and record their activity. If there are a lot more than 15 birds in the field of view, pick 15 by

starting on the left side of the field of view and working to the right. This avoids biasing the sample based on distance from the observer.

e. If there are not at least 15 birds of a particular guild in a field of view, record as much as possible, then choose another random direction.
f. Repeat steps 4a-e until at least 60 individuals of each guild have been observed.
g. If there are slightly more than 60 individuals of any guild, it may be more efficient to just record the activity of all of them, rather than going through the process of obtaining a random sample. That is perfectly acceptable.

5. If it is not possible to see all waterbirds in the impoundment from one observation point, use as many observation points as needed, but divide the scan samples up based on the proportion of birds viewed from each spot. (For example, if ¾ of the birds can be seen from one point and the remaining ¼ from another, do three scan samples of 15 birds at the first observation point and one scan sample at the second observation point.)

Protocol VA: Invertebrate Sampling: Water Column

Goal: To obtain a sample of invertebrates from the water column at a particular site within an impoundment.

Personnel: The invertebrate and vegetation measurements require a team of two people.

Equipment: Thermometer, 1-m^2 frame, sweep net, 1-meter stick, zip-lock bags, permanent marker, labels.

Timing: Two times per year: peak of spring and summer/fall shorebird migration.

Note: At each grid point, invertebrate and vegetation surveys should be completed in the following order: water column invertebrates, benthic invertebrates, horizontal cover, vertical cover.

Steps:

1. Invertebrate samples are to be taken at each of the grid points identified in the impoundment (see "Grid Sampling within Impoundments" above).

2. Approach the site carefully, so as to create as little disturbance of the water column as possible. Keep movement to a minimum prior to taking the water column sample.

3. Place the thermometer in the water to equilibrate.

4. Record the substrate condition (dry mud, wet mud, floating mat, water) and, if appropriate, the depth of the water (cm).

5. Keeping the net vertical, lower it to the bottom. Lift it up just enough to clear the bottom (about 3 cm, to avoid taking any benthic organisms). If the water is substantially deeper than the height of the net opening, and you are not sure whether to sample the upper or lower layers of the water column, submerge the net opening just below the surface and sweep the upper water column.

6. The second person should hold a 1-m^2 frame horizontally above the water, with one side oriented parallel to the direction of the sweep. Using this frame as a reference, make a 1-m long sweep through the water, keeping the net vertical.

7. Wash the contents of the net by repeatedly dipping it in the water.

8. Remove the contents of the net and place into a zip-lock bag. Label the bag with the Visit ID, impoundment code, the grid sampling point number (from the map), and a "W" to indicate a water column sample.

9. (a) If there is a floating mat at a particular point the water-column sample should *include* the floating mat. (b) If there is no water at a particular point, remember to record “N/A” (instead of “0”) for “Water Column Inverts” when processing invertebrate samples in the lab.

10. Continue with Protocol VB Invertebrate Sampling: Benthic.

Protocol VB: Invertebrate Sampling: Benthic

Goal: To obtain a sample of benthic invertebrates at a particular site within an impoundment.

Personnel: See Protocol VA.

Equipment: Core sampler, zip-lock bags, cooler strongly recommended

Timing: See Protocol VA.

Steps:

1. Push the core sampler into the mud until the top of the pipe (i.e., the screen) is flush with the impoundment floor. (Note that samples should be taken at all sampling grid points where wet mud or standing water occurs. Do not collect core samples at grid points where the substrate is dry mud [record "D" for substrate condition.])

2. Reach under the pipe and seal off the bottom. Lift the pipe out of the water.

3. Clean the sides of the pipe and level off the bottom. This step is *important* so that the volumes of all the benthic samples taken are standardized. If the core sampler is not full of mud, reach to the bottom of the hole created by the core and lift enough mud to fill the remainder of the pipe.

4. Place the entire benthic core into a zip-lock bag. Label the bag with the Visit ID, impoundment code, the sampling grid point, and a "B" to indicate a benthic sample.

5. Read water temperature from the thermometer set out in Protocol VA #3.

6. Continue with Protocol VIA Vegetation Sampling: Horizontal Cover. (Note that Protocol VC is not carried out in the field.)

Note: Protocol VC Invertebrate Processing must be completed within 5 days of sample collection. Samples must be refrigerated as soon as possible after collection and remain refrigerated until processed; this will make sorting and counting much easier because invertebrates will be alive and mobile.

Protocol VC: Invertebrate Processing

Goal: To prepare the invertebrate samples for counting and weighing.

Note: Invertebrate Processing must be completed within 5 days from sample collection. Samples must be refrigerated after collection until preserved in ethyl alcohol.

Personnel: One (but the more the merrier).

Equipment: Nested sieves of 2 mm (top) and 1 mm (bottom) mesh size, insect tray, sugar water (5 lbs of sugar dissolved in 3-4 L of water), insect tweezers, sample jars containing ethyl alcohol, Invertebrate Processing data sheet.

Steps:

1. This procedure applies to both the water column and benthic samples. It will obviously be much easier for the water column samples.

2. Place the sample in the upper sieve. Wash the sample through the nested sieves.

3. Wash the contents of both sieves into an insect tray.

4. Add 100-200 mL of sugar water to the insect tray (this will cause many of the invertebrates to float to the top).

5. Pick out the invertebrates with tweezers and place them in ethyl alcohol in sample jars. It is necessary to search through the detritus on the bottom of the tray for any remaining invertebrates. Note that you should only include *in*vertebrates. Vertebrates (tadpoles, fish, frogs, etc.) should not be included in the sample. If you find vertebrates that are interesting (either based on their identity or their numbers), please note that on the data sheet.

6. Record the total number of invertebrates found in each sample on (1) the Invertebrate Processing data sheet and (2) the sample jar label. For core samples that did not contain any animals, record “0” for that grid point. For grid points that were not sampled (dry substrate or no water column present), record “N/A” for that grid point.

7. Label the sample jars with the Visit ID, survey date, organization code, impoundment code, the sampling grid point (*as provided on the map*), and whether the sample is from the water column (W) or a benthic core (B).

8. Before shipping sample jars, please double check each jar to make sure the lid is tight.

9. Send all sample jars to Hal Laskowski.

Protocol VIA: Vegetation Sampling: Horizontal Cover

Goal: To obtain an index of the horizontal vegetative cover at a particular site within an impoundment.

Personnel: See Protocol VA.

Equipment: 1-m^2 frame, Vegetation Survey data sheet, Invasive Species Checklist.

Timing: See Protocol VA.

Steps: (see Vegetation Cover Survey data sheet)

1. Vegetation sampling is to be conducted at each of the grid points identified in the impoundment (see "Grid Sampling within Impoundments" above).

2. Place the 1-m^2 frame over the site.

3. Using the % cover categories below, estimate the fraction of area within the frame that is covered by (1) bare ground, (2) standing vegetation, and (3) matted vegetation. Both live and standing dead vegetation should be treated as standing vegetative cover. Matted vegetation is any vegetation that would produce a Robel visual obstruction of 0 and tallest intersection of 0 (see Protocol VIB), including algae mats, cattail mats (whether floating of sitting on dry substrate), etc. From a shorebird's perspective, matted vegetation is any flat vegetation that a small shorebird could walk on without obstruction. Note that matted vegetation includes floating-leaf aquatics that small shorebirds may walk on, such as Spotted Sandpipers on spatter-dock. Note also that the vegetation is only identified to species at the end of the growing season (See Protocol VIC Vegetation Sampling: Species Composition).

Ø	0 %
A	1—5 %
B	6—15 %
C	16—25 %
D	26—50 %
E	51—75 %
F	76—95 %
G	96—100 %

4. On the Invasive Species Checklist, check the appropriate box to record the presence of any invasive species within the 1-m^2 frame.
5. Record Submerged Aquatic growth code. A = Absent; S = Sparse: bottom easily visible through base of widely scattered stems; M = Moderate: any density between extremes of Sparse and Dense; D = Dense: bottom not visible through base of stems and you cannot easily push your hand through the stems.
6. Continue with Protocol VIB Vegetation Sampling: Vertical Cover.

Protocol VIB: Vegetation Sampling: Vertical Cover

Goal: To obtain an index of the vertical vegetation cover at a particular site within an impoundment.

Personnel: See Protocol VA.

Equipment: Robel pole (3 cm diameter x 1.5 m pole, marked in 10 cm increments), 4 m rope, meter stick, compass.

Timing: See Protocol VA.

Steps: (see Vegetation Survey Data Sheet)

1. Place the bottom of the Robel pole on the ground or at the surface of the water if inundated.

2. Using the rope and compass for reference, walk 4-m *north* of the Robel pole.

3. Place the 1-m stick on the ground or at the surface of the water, if inundated.

4. From a height of 1 m (eye-level at the top of the meter stick), determine (1) the lowest increment on the Robel pole that is totally or partially visible ("VO" for visible obstruction on data sheet), and (2) tallest intersection ("TI"). The tallest intersection is the highest increment that has any vegetation crossing in front of the pole.

5. Repeat for other cardinal directions.

6. After all of the sites are measured, be sure to also check the water gauge and record the water level for that day.

Protocol VIC: Vegetation Sampling: Species Composition

Goal: To estimate the plant species composition at a particular site within an impoundment.

Personnel: See Protocol VA.

Equipment: 1-m^2 frame, Robel pole (3 cm diameter x 1.5 m pole, marked in 10 cm increments), 4 m rope, meter stick, compass, and Plant Species Composition data sheet

Timing: Once per season, near end of growing season

Steps: (see Plant Species Composition Data Sheet)

1. Vegetation sampling is to be conducted at each of the grid points identified in the impoundment (see "Grid Sampling within Impoundments" above).

2. Conduct steps 1-5 of Protocol VIB Vegetation Sampling: Vertical Cover (Robel readings).

3. Place the 1-m^2 frame over the site. First, record substrate conditions, total horizontal cover, SAV code, and Robel readings as in Protocol VIA.

4. Next, within the frame, identify each plant species present and estimate the fraction of area that is covered by each species, using the categories below:

Ø	0 %
A	1—5 %
B	6—15 %
C	16—25 %
D	26—50 %
E	51—75 %
F	76—95 %
G	96—100 %

The total of all percentages for all species (as reflected in the categories A-G) may add up to more than 100% because different species may be growing in distinct layers.

Identification to species level may not be possible in all cases. Record species-level identification whenever possible and genus-level for groups that are difficult to identify. Unknown species should be recorded as "Unknown #_" and then collected using a plant press. Unknown plants should be identified in the office using field guides, regional wetland plant keys, and consultation with local experts.

Refuge Staff Time by Activity

A breakdown of refuge staff time by activity is provided in Table 4.

Table 4. Estimated staff time for management actions and data collection in Region 3/Region 5 impoundment study.

Annual Activity	# Staff @ # hours	Staff Time per NWR (hours)
Activities Conducted Every Year		
Manipulate Vegetation if needed	2 @ 12 h	24
Water level manipulations	1 @ 20 h	20
Waterbird Surveys	2 @ 4 h (32 wks)	256
Detectability Surveys	6 @ 12 h	72
Vegetation Measurements	2 @ 20 h (3 wks)	120
Invertebrate Sampling	2 @ 8 h (2 wks)	32
Sieve/Sort Invertebrates	1 @ 40 h (2 wks)	80
Staff Time per NWR / Year		604
Additional Activity in First Year		
Selection of Study Sites	2 @ 6 h	12
Bathymetry Measurements	2 @ 16 h	32
Training Workshop	2 @ 8 h	16
Additional Activity in Final Year		
Training Tour	2 @ 32 h	64

Data Handling Procedures

Data Sheets

Copies of all data sheets will be included as pdf files with the final version of the study manual. At the end of each calendar year, send original data sheets to PWRC and one copy to Hal Laskowski.

Electronic Database and Data Entry

An electronic database will be provided to facilitate data entry at each refuge. The database will be constructed in Microsoft Access and designed so that data entry forms are compatible with field data sheets. The database will include tables for survey conditions, waterbird surveys, waterbird activity surveys, invertebrate samples, and vegetation cover and species composition. Instructions for use of the database will be distributed with the database.

Literature Cited

Alerstam, T., G. A. Gudmundsson and K. Johannesson. 1992. Resources for long distance migration: intertidal exploitation of Littorina and Mytilus by knots *Callidris canutus* in Iceland. Oikos 65:179-189.

Helmers, D. L. 1992. Shorebird management manual. Western Hemisphere Shorebird Reserve Network, Manomet, MA. 58pp.

Hicklin, P.W. 1987. The migration of shorebirds in the Bay of Fundy. Wilson Bull. 99:540-570.

Lyons, J. E. and S. M. Haig. 1995. Fat content and stopover ecology of spring migrant semipalmated sandpipers in South Carolina. The Condor. 97:427-437.

Myers, J. P. 1986. Sex and gluttony on Delaware Bay. Nat. Hist. 95(5):68-77.

Skagen, S. K. and F. L. Knopf. 1993. Toward conservation of Midcontinental shorebird migrations. Conservation Biology. 7:533-540.

Skagen, S. K. and F. L. Knopf. 1994. Migrating shorebirds and habitat dynamics at a prairie wetland complex. Wilson Bull. 106:91-105.

Appendix 1. Beaufort Wind Scale

Beaufort Wind Scale			
Beaufort Force	**Equivalent Speed (MPH)**	**Description**	**Specifications for use on land**
0	< 1	Calm	Calm: smoke rises vertically
1	1-3	Light Air	Direction of wind shown by smoke drift, but not by wind vanes
2	4-7	Light Breeze	Wind felt on face; leaves rustle; ordinary vanes moved by wind.
3	8-12	Gentle Breeze	Leaves and small twigs in constant motion; wind extends light flag.
4	13-18	Moderate Breeze	Raises dust and loose paper; small branches are moved.
5	19-24	Fresh Breeze	Small trees in leaf begin to sway; crested wavelets form on inland waters.
6	25-31	Strong Breeze	Large branches in motion; whistling heard in telegraph wires; umbrellas used with difficulty.
7	32-38	Near Gale	Whole trees in motion; inconvenience felt when walking against the wind.
8	39-46	Gale	Breaks twigs off trees; generally impedes progress.
9	47-54	Severe Gale	Slight structural damage occurs (chimney-pots and slates removed).
10	55-63	Storm	Seldom experienced inland; trees uprooted; considerable structural damage occurs.
11	64-72	Violent Storm	Very rarely experienced; accompanied by wide-spread damage.
12	73-83	Hurricane	--

Appendix 2. Random Compass Bearings

Random compass bearings between 5° and 180° in steps of 5. To use this table, read down the columns. If a particular bearing does not fall over the impoundment, disregard it and continue with the next bearing down. Cross off bearings as you go. Note that these bearings are taken from the left bank of the impoundment from the observation point being used.

Wk 1	Wk 2	Wk 3	Wk 4	Wk 5	Wk 6	Wk 7	Wk 8	Wk 9	Wk 10	Wk 11	Wk 12	Wk 13
110	75	85	50	175	100	85	5	175	45	90	125	115
90	15	5	35	55	110	155	10	80	5	180	165	125
120	160	25	95	140	30	90	55	155	115	55	65	170
110	175	95	100	60	140	145	115	80	180	145	145	140
65	180	25	30	80	125	160	180	5	20	160	165	85
180	65	80	85	165	15	40	20	180	25	60	85	80
60	30	35	175	115	130	95	175	115	15	85	50	85
165	5	100	70	90	135	10	130	85	20	70	155	155
20	70	165	10	155	135	75	130	70	25	160	65	125
20	40	5	55	60	140	80	115	5	115	70	140	160

Wk 14	Wk 15	Wk 16	Wk 17	Wk 18	Wk 19	Wk 20	Wk 21	Wk 22	Wk 23	Wk 24	Wk 25	Wk 26
95	140	40	95	20	20	25	120	45	125	105	150	100
45	105	30	115	120	35	155	25	5	120	115	165	90
120	155	10	75	25	140	5	5	110	165	25	5	110
20	35	5	10	30	150	140	65	175	160	90	30	100
120	170	15	120	25	30	75	35	140	95	125	30	5
180	100	120	45	20	135	165	105	20	50	170	45	170
155	130	80	120	80	145	65	135	160	40	160	145	180
160	170	100	40	75	135	45	55	140	15	40	80	100
60	35	105	70	155	100	90	55	110	120	175	45	60
175	120	155	35	180	130	135	100	20	60	60	100	65

Wk 27	Wk 28	Wk 29	Wk 30	Wk 31	Wk 32	Wk 33	Wk 34	Wk 35	Wk 36	Wk 37	Wk 38	Wk 39
130	100	110	145	150	140	75	125	40	80	65	120	175
125	15	180	60	170	140	120	170	75	80	85	20	35
30	45	145	155	80	145	55	125	140	180	30	170	5
65	145	40	15	100	25	30	120	160	160	105	10	125
85	125	165	75	90	140	40	45	15	40	45	180	60
155	60	115	80	40	30	110	130	5	65	35	100	75
60	130	130	140	105	120	20	90	150	115	65	15	40
105	105	15	10	115	95	165	165	75	135	75	35	145
50	155	75	135	160	105	155	30	80	15	65	125	115
65	30	75	120	60	80	160	135	145	55	25	5	110

Appendix 3. Transit Diagram

CONVERTING SCOPE INTO TRANSIT
FOR REGION 5 SHOREBIRD/WATERFOWL PROJECT

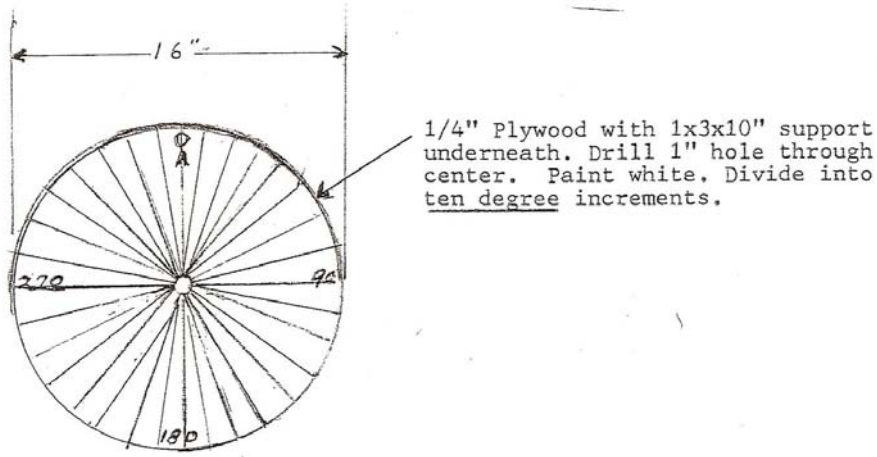

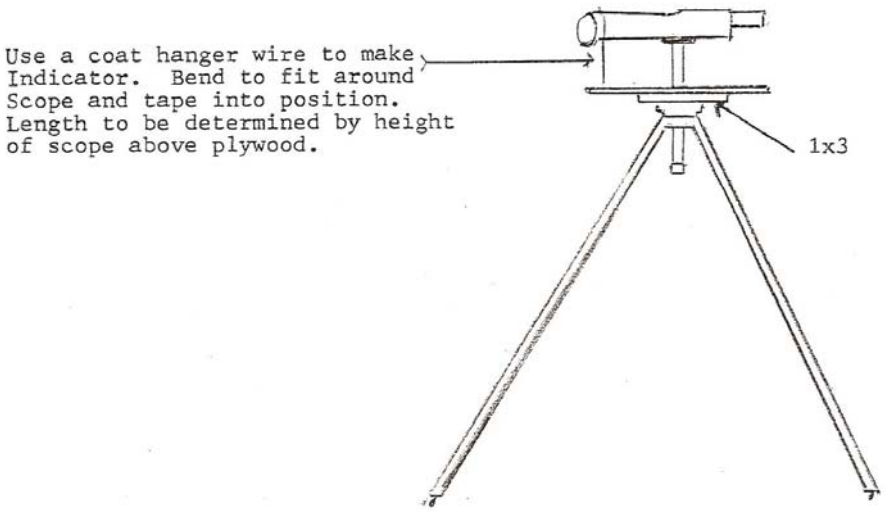

TO USE: Line up arrow (0) with nearest post on left. Rotate scope the number of degrees called for by the random number table.

L.A.Dumont