PERMIT DRAWINGS
SOUTH LAKE LERY
SHORELINE AND MARSH RESTORATION

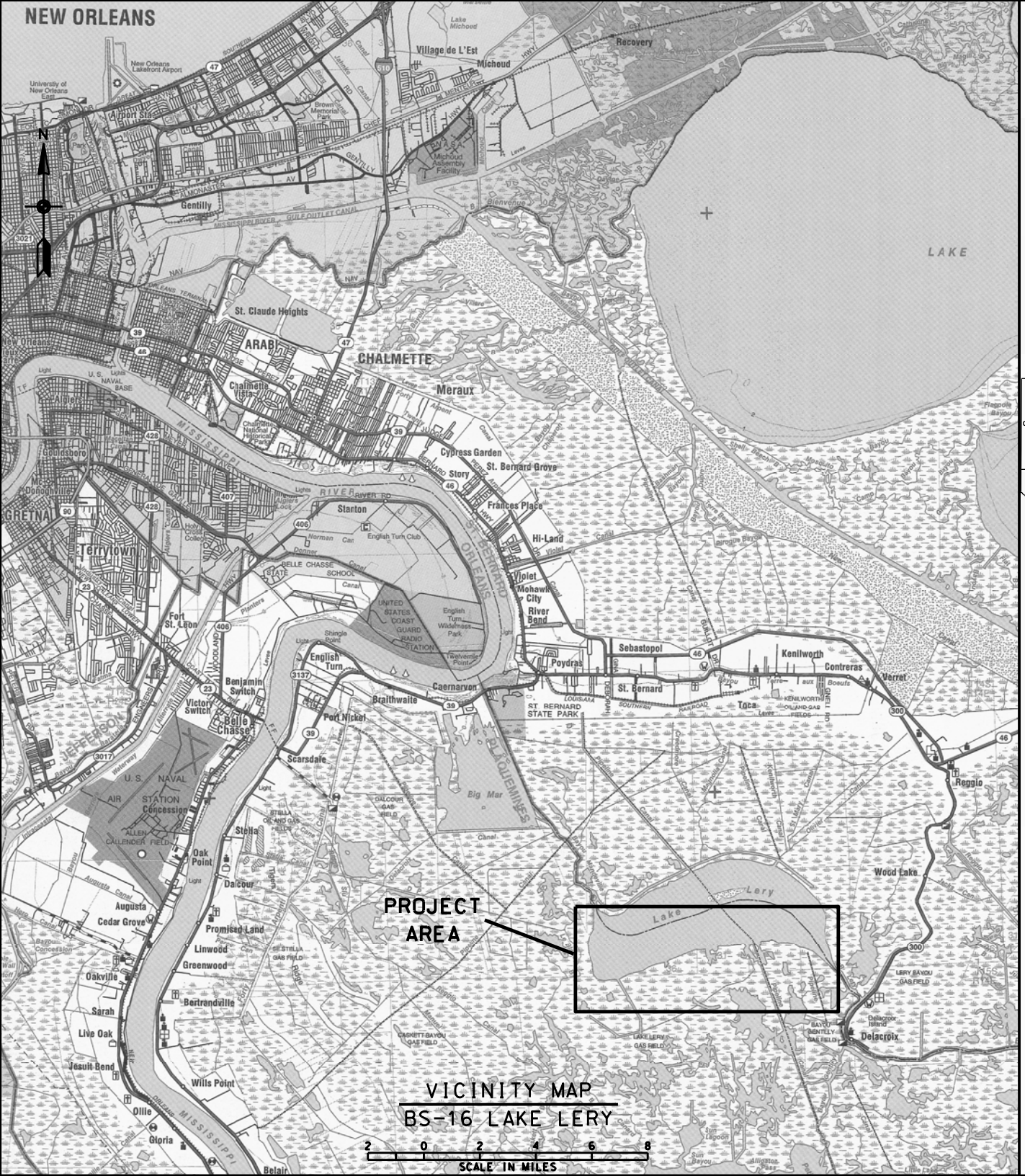

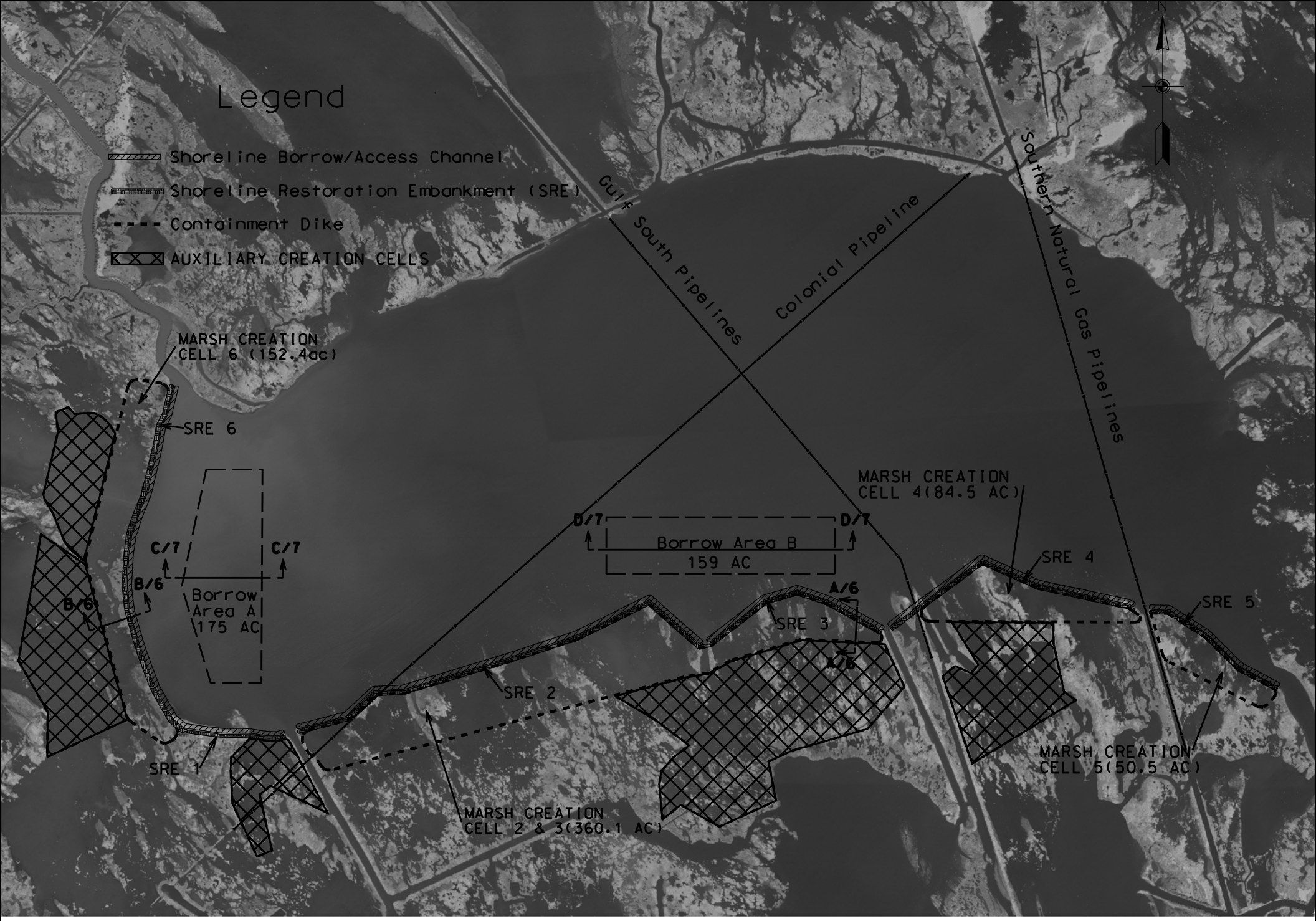

PROJECT MAP - SOUTH LAKE LERY SHORELINE AND MARSH RESTORATION

2000 0 2000 4000 6000 8000

SCALE IN FEET

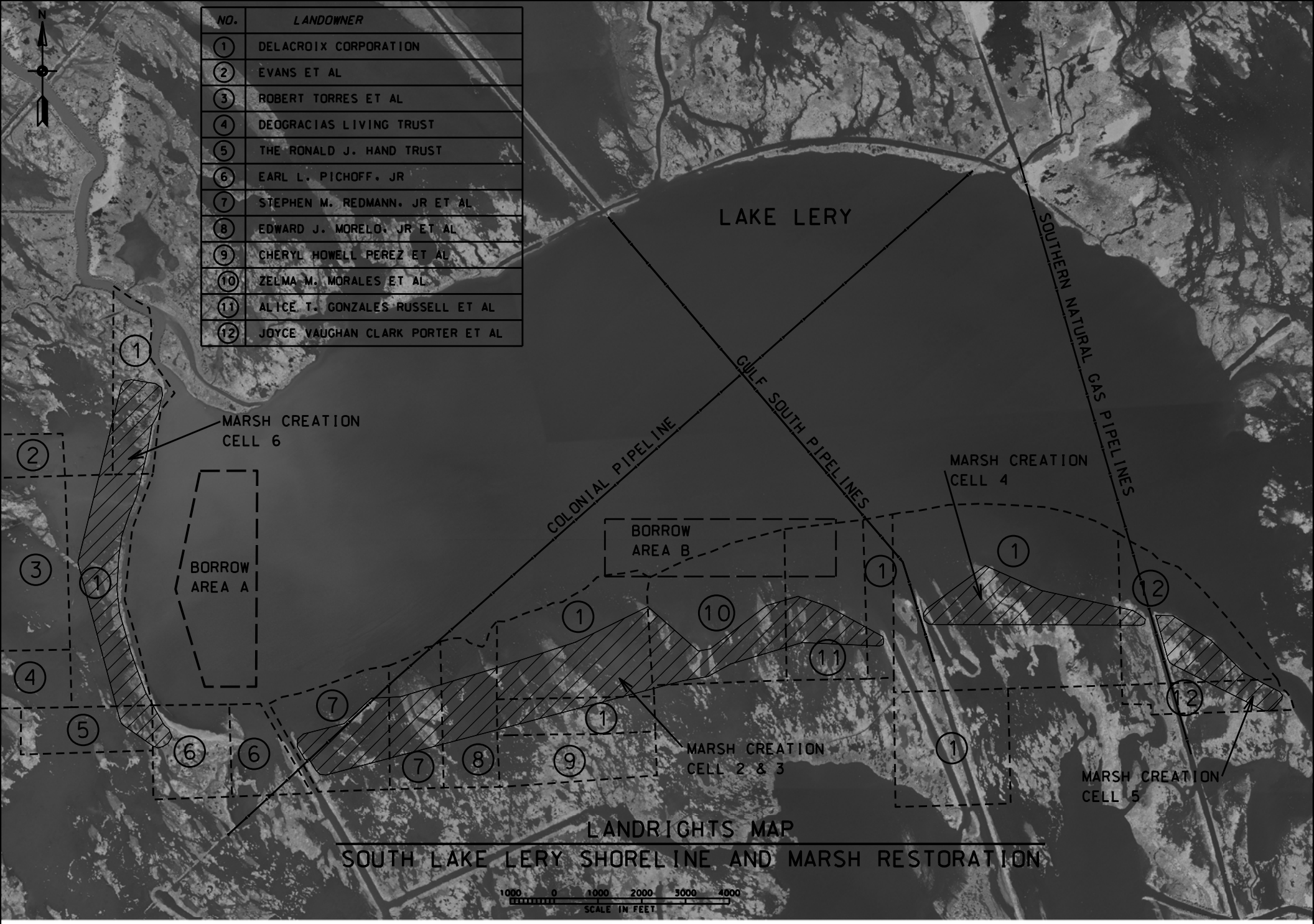

NO.	LANDOWNER
1	DELACROIX CORPORATION
2	EVANS ET AL
3	ROBERT TORRES ET AL
4	DEOGRACIAS LIVING TRUST
5	THE RONALD J. HAND TRUST
6	EARL L. PICHOFF, JR
7	STEPHEN M. REDMANN, JR ET AL
8	EDWARD J. MORELO, JR ET AL
9	CHERYL HOWELL PEREZ ET AL
10	ZELMA M. MORALES ET AL
11	ALICE T. GONZALES RUSSELL ET AL
12	JOYCE VAUGHAN CLARK PORTER ET AL

LANDRIGHTS MAP

SOUTH LAKE LERY SHORELINE AND MARSH RESTORATION

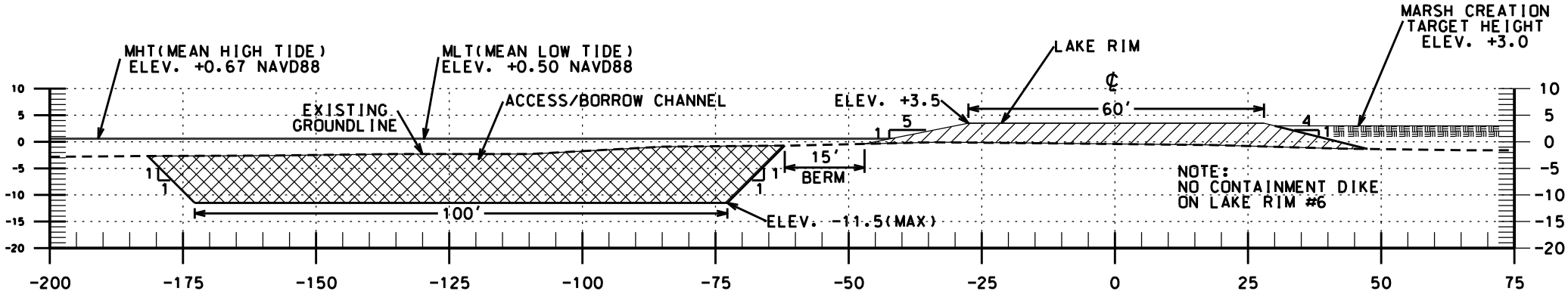

TYPICAL SECTION-LAKE RIM CELL 6

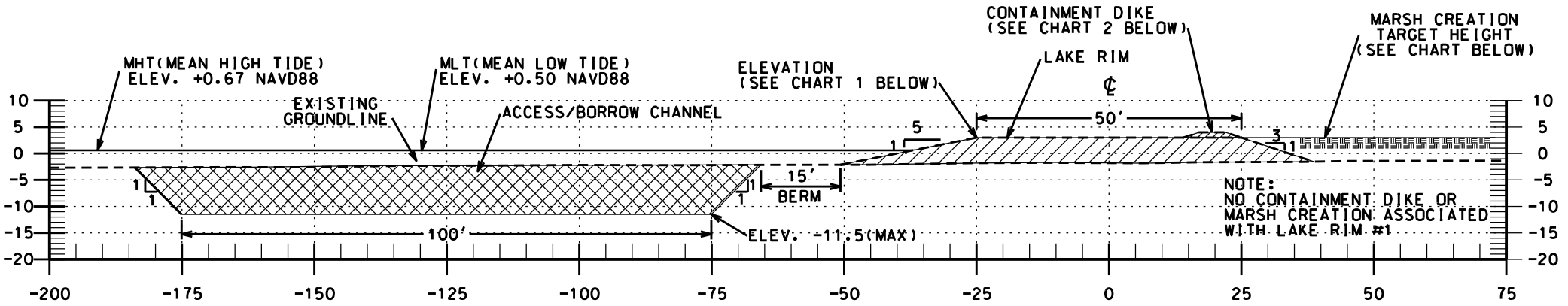

TYPICAL SECTION-LAKE RIM CELLS 1,2,3,4 & 5

NOTE:
VERTICAL SACLE ON BOTH TYPICAL SECTIONS
ON THIS SHEET REFERENCED TO NAVD88 DATUM.

CHART 1

LAKE RIM NO.	TOP ELEV.
LAKE RIM 1	3.5'
LAKE RIM 2	3.5'
LAKE RIM 3	3.5'
LAKE RIM 4	3.0'
LAKE RIM 5	3.0'

CHART 2

CONTAINMENT NO.	TOP ELEV.	TARGET FILL ELEV.
CONTAINMENT 2&3	5.0'	3.5'
CONTAINMENT 4	4.0'	2.5'
CONTAINMENT 5	4.0'	2.5'
CONTAINMENT 6	3.5'	3.0'

NOTE:
1.CONTAINMENT DIKE BORROW AREA SHALL BE USED FOR THE CONSTRUCTION OF THE CONTAINMENT DIKE ONLY.
2.CONTAINMENT DIKES SHALL BE CONSTRUCTED ON ALL LAKE RIMS EXCEPT LAKE RIMS 1 AND 6.

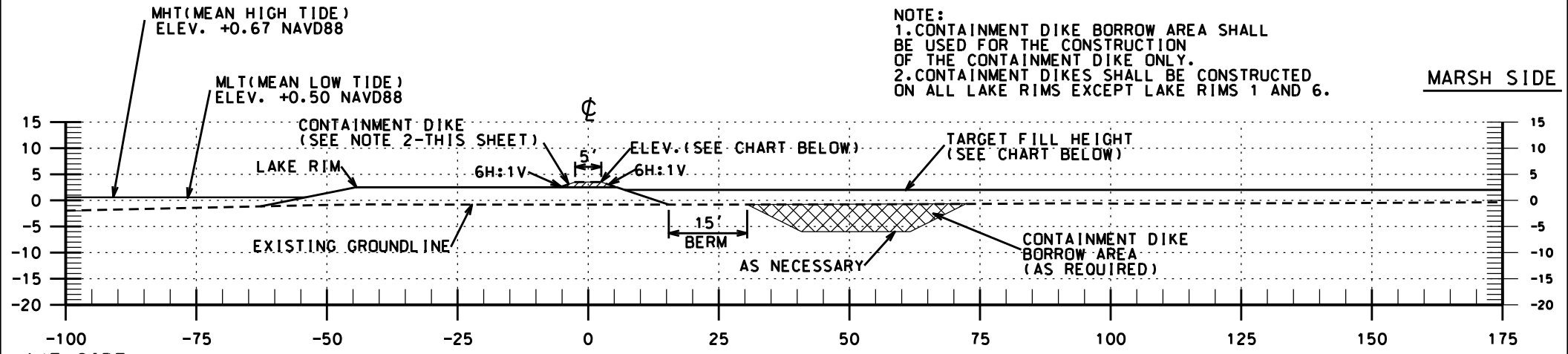

TYPICAL SECTION - CONTAINMENT DIKE ON LAKE RIM

NOTE:
CONTAINMENT DIKE BORROW AREA SHALL SHALL BE USED FOR THE CONSTRUCTION OF THE CONTAINMENT DIKE ONLY.

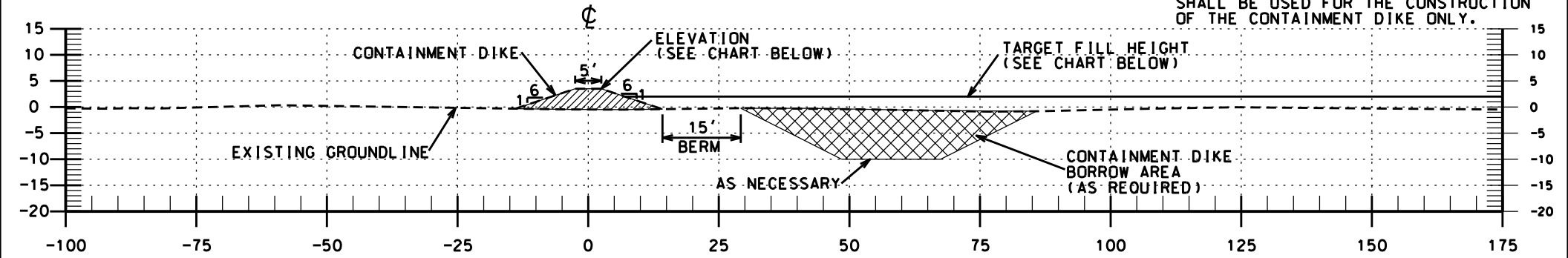

TYPICAL SECTION - CONTAINMENT DIKE(STAND ALONE)

NOTE:
VERTICAL SACLE ON BOTH TYPICAL SECTIONS ON THIS SHEET REFERENCED TO NAVD88 DATUM.

NOTES:
1.SHEETPILE MAY ONLY BE INSTALLED AFTER AT LEAST ONE LIFT OF CONTAINMENT MATERIAL IS PLACED TO A MINIMUM OF +1.0.
2.VINYL SHEET PILES ARE TEMPORARY. THEY WILL BE REMOVED AT A FUTURE DATE TO BE DETERMINED BY THE COTR(CONTRACTING OFFICER'S TECHNICAL REPRESENTATIVE).

CONTAINMENT NO.	TOP ELEV.	TARGET FILL ELEV.
CONTAINMENT 2&3	5.0'	3.5'
CONTAINMENT 4	4.0'	2.5'
CONTAINMENT 5	4.0'	2.5'
CONTAINMENT 6	3.5'	3.0'

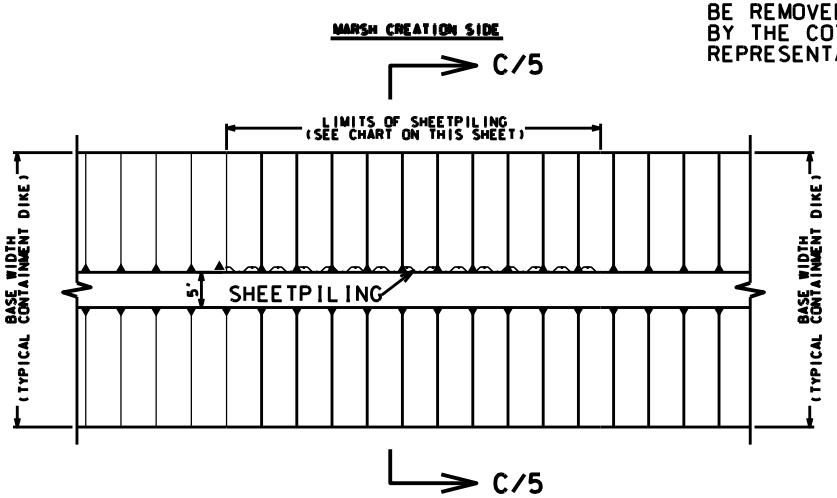

TYPICAL PLAN - CONTAINMENT DIKE
ALTERNATIVE CLOSURE - SHEETPILE

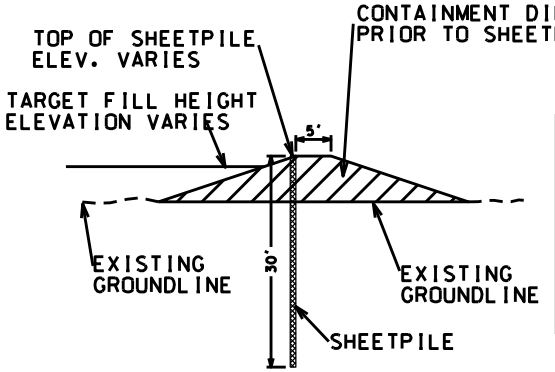

SECTION C-C/5

SHEETPILE LIMITS

REACH NO.	DIST.	LIMITS OF REACH
LAKE RIM 6	125'	STA. 24+25 - STA. 25+50
LAKE RIM 6	180'	STA. 33+50 - STA. 35+30
LAKE RIM 4	200'	STA. 41+00 - STA. 43+00
LAKE RIM 5	200'	STA. 9+00 - STA. 11+00
CONTAINMENT 6	140'	STA. 100+30 - STA. 101+70
CONTAINMENT 4	225'	STA. 101+50 - STA. 103+75
CONTAINMENT 5	200'	STA. 8+50 - STA. 10+50

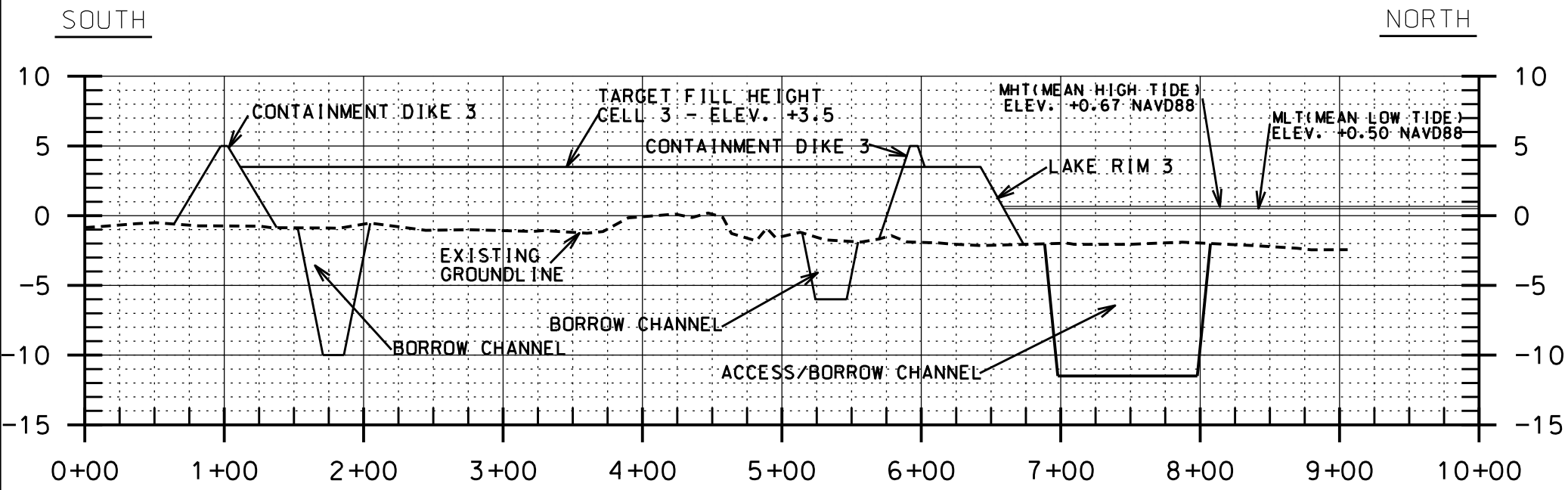

SECTION A-A/2

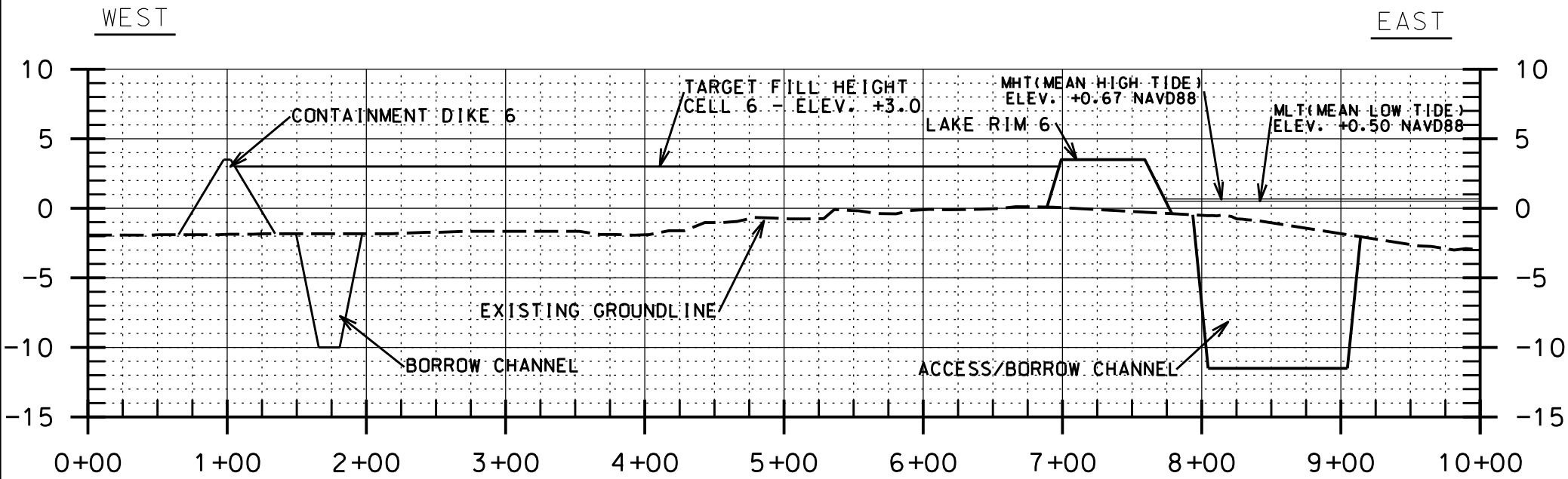

SECTION B-B/2

NOTE:
VERTICAL SACLE ON BOTH SECTIONS ON THIS SHEET REFERENCED TO NAVD88 DATUM.

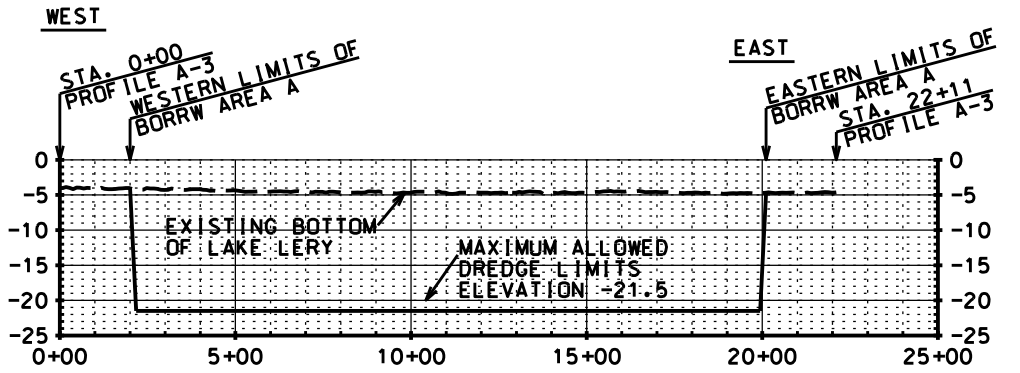

STA. 0+00
PROFILE A-3
BORROW AREA A
Y=471643.00
X=3743710.92

STA. 22+11
PROFILE A-3
BORROW AREA A
Y=471643.00
X=3745921.58

SECTION C-C/2
WEST - TO - EAST

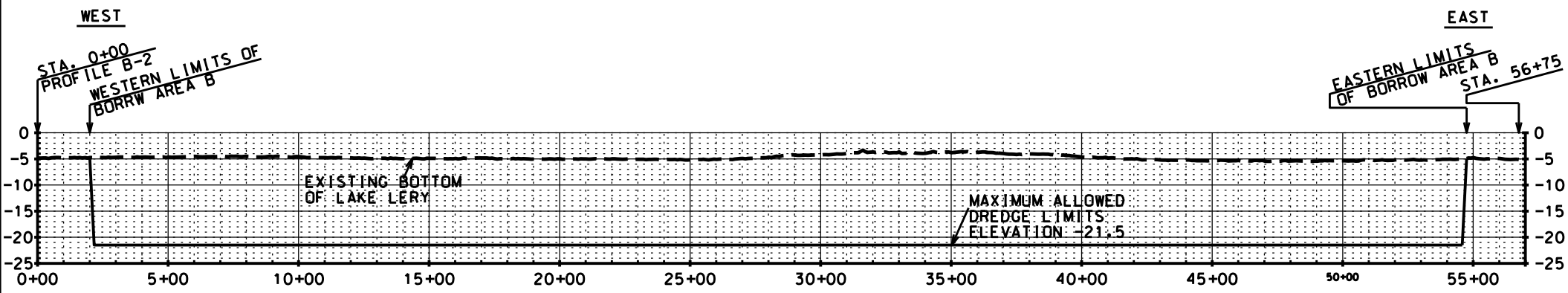

STA. 0+00
PROFILE B-2
BORROW AREA B
Y=472292.72
X=3753474.47

STA. 56+75
PROFILE B-2
BORROW AREA B
Y=472292.72
X=3759149.11

SECTION D-D/2
WEST - TO - EAST