U.S. Fish and Wildlife Service
Columbia River Fish and Wildlife Conservation Office

Evaluation of adult Pacific Lamprey upstream passage at Warm Springs National Fish Hatchery

FY 2017 Annual Report

Judith Barkstedt and Andy Johnsen

U.S. Fish and Wildlife Service
Columbia River Fish and Wildlife Conservation Office
Vancouver, WA 98683

On the cover: *Adult Pacific Lamprey captured in summer 2017 just downstream of the Warm Springs National Fish Hatchery fishway entrance, Warm Springs, Oregon.*

Disclaimers

The findings and conclusions in this report are those of the authors and do not necessarily represent the views of the U.S. Fish and Wildlife Service.

The mention of trade names or commercial products in this report does not constitute endorsement or recommendation for use by the federal government.

The correct citation for this report is:

Barkstedt, J. and A. Johnsen. 2018. Evaluation of adult Pacific Lamprey upstream passage at Warm Springs National Fish Hatchery, 2017 Annual Report. U.S. Fish and Wildlife Service, Columbia River Fish and Wildlife Conservation Office, Vancouver, WA. # pp. www.fws.gov/columbiariver/publications.html

EVALUATION OF ADULT PACIFIC LAMPREY UPSTRAEM PASSAGE AT WARM SPRINGS NATIONAL FISH HATCHERY
2017 ANNUAL REPORT

Judith Barkstedt[1] and Andy Johnsen[2]

[1]*U.S. Fish and Wildlife Service*
Columbia River Fish and Wildlife Conservation Office
1211 SE Cardinal Court, Suite 100
Vancouver, WA 98683

[2]*Confederated Tribes of Warm Springs*
Branch of Natural Resources Fisheries Research
4205 Upper Dry Creek Road
Warm Springs, OR 97761

Abstract

Population declines of Pacific Lamprey *Entosphenus tridentatus* in the Columbia River Basin are partially attributed to impediments to upstream spawning migration of adults. To promote adult Pacific Lamprey passage, fishway modifications have been installed at both high-head and low-head dams across the basin. In 2014, the U.S. Fish and Wildlife Service completed an assessment of the low-head dam and fishway at Warm Springs National Fish Hatchery, Oregon and identified passage deficiencies for adult Pacific Lamprey. In the fall 2017, per the recommendations of the assessment, we installed a Lamprey Passage Structure (LPS) in the fishway, which will become fully operational in spring 2018. Prior to installation, we evaluated adult Pacific Lamprey passage efficiency and route selection at the hatchery. These data provide a baseline against which to compare the effectiveness of the LPS. In 2016 and 2017 we trapped, PIT- and/or radio-tagged, and released adult Pacific Lamprey approximately 100 m downstream of the dam and fishway. We monitored fish passage using PIT- and radio-telemetry antennas located upstream, downstream, and within the fishway. In 2016, we captured, PIT-tagged, and released one adult Pacific Lamprey; in 2017, we captured nine adult Pacific Lamprey, six of which were PIT- and radio-tagged and released. Radio telemetry results showed three fish moved upstream of the dam using the fishway and exited at a turning pool located within the fishway instead of moving through the entire ladder. One additional fish was detected upstream of the dam but its route was not determined because it was not detected in the fishway. Two fish did not move upstream of the hatchery during our study. We will continue evaluate adult Pacific Lamprey passage to estimate the number of fish moving upstream of the dam, the percentage of radio-tagged fish using the LPS versus the ladder, and the timing of their movements. Our evaluation will determine the effectiveness of the LPS and help identify necessary modifications to facilitate fish passage and in turn increase the population contribution of Pacific Lamprey in the Warm Springs River to the Columbia River Basin.

[1] Judith_Barkstedt@fws.gov

Page intentionally left blank

Introduction

Pacific Lamprey *Entosphenus tridentatus* populations in the Columbia River Basin have declined from both their historic range and population sizes (Luzier et al. 2011). In 2003, a petition to list Pacific Lamprey on the Endangered Species Act was found not warranted, citing a lack of information (USFWS 2004). In response, the Pacific Lamprey Conservation Initiative (PLCI) was created in 2007 in an effort to determine the population status and address limiting factors (Luzier et al. 2011).

Passage impediments to upstream spawning habitat are among the identified factors contributing to the decline of populations in the Columbia River Basin (Chelgren and Dunham 2015, Clemens et al. 2017, Keefer et al. 2013, Moser et al. 2015,). To increase adult passage success, Lamprey Passage Structures (LPSs) have been installed on dams and water diversion structures throughout their range. These structures are effective at providing routes for lamprey passage, and use increases over time (Lamprey Technical Workgroup 2017, Moser et al. 2011). Low elevation dams have been shown to be barriers to lamprey passage (Jackson and Moser 2012). Some low-head dams include fishways for providing salmonid upstream access, however, these fishways may not be designed for efficient adult lamprey passage.

Warm Springs National Fish (NFH) hatchery, located at river kilometer 16 of the Warm Springs River on the Warm Springs Indian Reservation, began operation in 1978. The hatchery is co-managed by the United States Fish and Wildlife Service (USFWS) and the Confederated Tribes of the Warm Springs Reservation of Oregon. The primary purpose of the hatchery is to produce of Spring-run Chinook Salmon for harvest. As part of the hatchery design, a low-head barrier dam blocks all upstream migrating fish and diverts them into a fishway at the hatchery (Gallion and Skalicky 2014). Upstream migrating fish can then be sorted to either be passed upstream or diverted into hatchery catch ponds. In 2006, the USFWS Pacific Region Hatchery Review Team assessed Warm Springs NFH and recommended that the effects of the dam and fishway on the upstream and downstream movement of native fishes, including Pacific Lamprey, be evaluated (USFWS 2006).

In 2014, the USFWS Columbia River Fish and Wildlife Conservation Office evaluated the hatchery ladder and barrier dam (Gallion and Skalicky 2014). The evaluation consisted of a physical inspection of the de-watered fishway, velocity measurements in the fishway, and a visual inspection of the barrier dam. These evaluations were then compared to lamprey passage recommendations of the following: 4-inch rounded corners and edges, absence of 90° angles, velocity < 1.2 m/s, and suitable attachment substrate (David Wills *pers. comm. in* Gallion and Skalicky 2014; *note: lamprey passage guidelines have since been established, as found in* Pacific Lamprey Technical Workgroup 2017). Areas identified as potential passage impediments include the 4-ft overhanging lip at the barrier dam and throughout the fishway where there are sharp angles and high velocities. Because significant passage deficiencies for Pacific Lamprey were identified, a LPS was recommended to improve upstream passage for adult lamprey in the Warm Springs River (Gallion and Skalicky 2014).

In 2015, the USFWS secured funding to design and install a LPS, which would be the first LPS installed at a National Fish Hatchery. The LPS design includes an aluminum flume and rest box design, similar to LPS designs at Bonneville Dam on the mainstem Columbia River, Three-mile Dam on the Umatilla River, and Prosser Dam on the Yakima River (Lamprey Technical Workgroup 2017). The LPS consists of a series of flume ramps connected to resting boxes leading from the entrance of the fishway with an exit into the

forebay (Appendix I). The components of the LPS were installed in September 2017 and the first season of operation will be in 2018.

A monitoring plan to assess the effectiveness of the LPS, and evaluate adult lamprey passage in general at the hatchery, was developed concurrently with the design and construction of the LPS. One of the goals of the monitoring plan was to evaluate adult lamprey movements in the area near the hatchery prior to installation and operation of the LPS. In 2016 and 2017, the objectives of the monitoring program were to: 1) Estimate adult lamprey passage efficiency past the hatchery, 2) Determine the timing of adult lamprey passage, and 3) Describe the route that adult lamprey take when passing upstream of the hatchery. We will use these results to compare lamprey movements post-LPS operation. This report describes the activities in 2016 and 2017, where adult lamprey were trapped, radio- or PIT-tagged, and released below the hatchery. Using a network of aerial and local radio antenna, adult lamprey movements were tracked at the hatchery.

Study Area

Within the Columbia River Basin, the Warm Springs River drains approximately 1,361 km^2 of area on the eastern slope of the Cascade mountain range into the Deschutes River at river kilometer (RKM) 135 (measuring from its confluence with the Columbia River; (Figure 1). The river is contained entirely within the Warm Springs Indian Reservation. Peak flows occur in February and low flows in September and October. During our study period in 2016, discharge ranged from 6.09 to 7.96 m^3/s. During our 2017 study period, discharged ranged from 6.71 to 30.58 m^3/s. Including tributaries, an estimated 111 RKM of stream habitat is available to anadromous fishes above the barrier dam (Cates 1992).

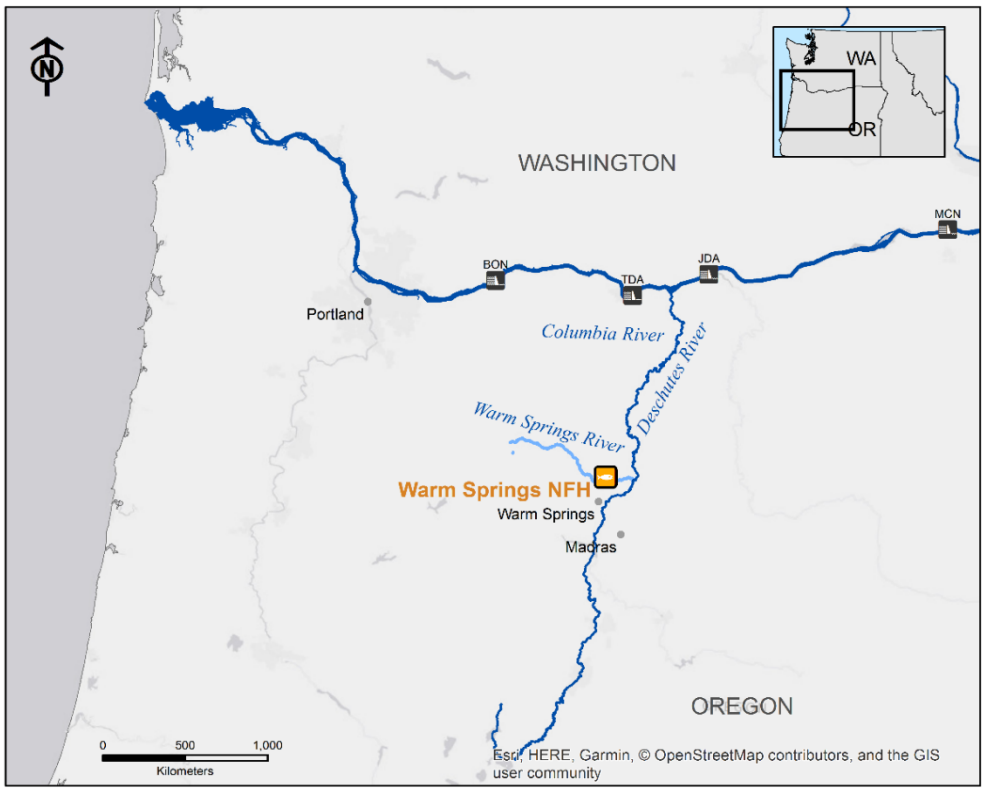

Figure 1. Warm Springs National Fish Hatchery is located on the Warm Springs River at RKM 16, which is 481 RKM upstream from the mouth of the Columbia River.

Methods

Trapping

To collect adult Pacific Lamprey (hereafter referred to as "lamprey") to assess the passage success and route use before the LPS operation, we used passive traps within the river immediately downstream of Warm Springs NFH. In general, the traps were constructed out of 0.3 m length, large diameter PVC (e.g. 20.3 cm diameter) with a funnel at one end and a perforated cap at the other end (Figure 2). Some traps were a two-funnel design, which has been shown to increase the retention of lamprey in the traps (Luzier et al. 2005). We used pot traps of varying diameters (ranging from 20 to 25.4 cm) and funnel-number designs. Traps were deployed off the river left bank in areas of low velocity with the funnel oriented downstream. Traps were checked one to two times per week.

In 2016, eight pot traps were deployed for 112 days from 20 June to 10 October for a total of 896 trap days.In 2017, trapping occurred for 162 d from 14 April to 26 September for a total of 1,784 trap days. Initially, eight pot traps were deployed from 14 April to 22 May. Four additional traps were added on 23 May. Traps were deployed in three locations until stream flows receded and all traps were moved to the area immediately below the fishway entrance on 17 July. Trapping concluded 33 d after the last lamprey capture on 26 September, prior to the installation of the LPS.

Figure 2. Checking pot traps located at the fishway entrance and diagram (inset) of a typical pot trap design.

Fish Tagging

Captured lamprey were tagged and released the same day. In 2016, a radio-telemetry study was not initiated because only one lamprey was captured. We PIT-tagged the fish via the same protocols as radio-telemetry surgery (detailed below), however, a smaller 3 cm incision was made, and a 23 mm half duplex (HDX) PIT tag was inserted towards the anterior of the lamprey. In 2017, lamprey received both radio- and HDX PIT-tags.

Lamprey were tagged following a modification of methods outlined in Liedtke et al. (2012) and Moser et. al (2002) using uniquely coded radio nano transmitters (NTQ-4-2L). The radio transmitters were set at a 10 s burst rate, with an estimated tag life of 251 d, and weighed 1.6 g.

For disinfection purposes, radio-tags, PIT-tags, and surgical tools were immersed in Benz-All® (Xttrium Laboratories, Chicago, Illinois) for a minimum of 10 minutes then rinsed in a deionized water bath prior to use. Lamprey were anesthetized with 80mg/L concentration of tricaine methanesulfonate (MS-222) until anesthetized (within 5 min) then transferred to a surgery cradle (PVC half-pipe) and with a maintenance bath of 26.6 mg/L MS-222 for the duration of the surgery (typically less than 5 min).

The surgery cradle was placed at an angle into a 37.9 L surgery tub, covering the gill openings with the maintenance bath while keeping the body out of the water. Prior to surgery, fish were weighed (g), measured for total length (TL mm) and girth (mm) at the insertion of the first dorsal fin insertion. Only fish with a girth of >90 mm were surgically implanted with a radio tag.

To implant tags, we made a 12 cm incision with a #12 curved scalpel 1 cm off the center line on the ventral side of the lamprey, ending at a point parallel to the first dorsal fin insertion. First, a 23 mm HDX PIT-tag was inserted into the body cavity toward the anterior. Then, to implant the radio tag into the body cavity, a 16 gauge 154.4 mm catheter was inserted from the incision, through the body cavity, and pushed through the body wall approximately 5 cm posterior to the incision. The radio antenna was threaded through the catheter and the tag was fitted into the body cavity. We closed the incision with 3 stitches of 3-0 braided absorbable surgical suture using a 19 mm needle. We transferred the fish to an aerated tub of fresh water to recover for a minimum of 15 minutes.

Fish were released approximately 100 m downstream of the Warm Springs Hatchery low-head dam.

Radio Telemetry Monitoring

Fixed-site radio telemetry stations were placed in areas to assess tagged adult lamprey passage route selection and success through the fishway. Three aerial stations using a Yagi antenna were set up to detect general lamprey locations. One aerial station was located 200 m downstream of the release site of radio-tagged lamprey to detect fish moving downstream and out of the study reach. A second aerial antenna was located at the hatchery, covering the area just below the barrier dam to detect any lamprey in the vicinity of the hatchery structures. A third aerial antenna was located 400 m upstream of the hatchery and barrier dam near the PIT tag antenna site to determine if lamprey successfully navigated upstream of the hatchery and barrier dam. While anecdotal observations of lampreys on river right suggests that lamprey passage may be possible, we were unable to install a station on the right bank because we lacked accessibility.

To determine the routes used by lamprey navigating the fishway, low-range coaxial cables were placed locally in the fishway. Several routes are possible, however we focused on the most likely routes through the hatchery which includes 1) entrance to turning pool B3 to exit and 2) entrance through the fishway to the exit. Local antenna receivers were place at the entrance, at turning pool B3, and in the transport channel leading into holding pools (Figure 3).

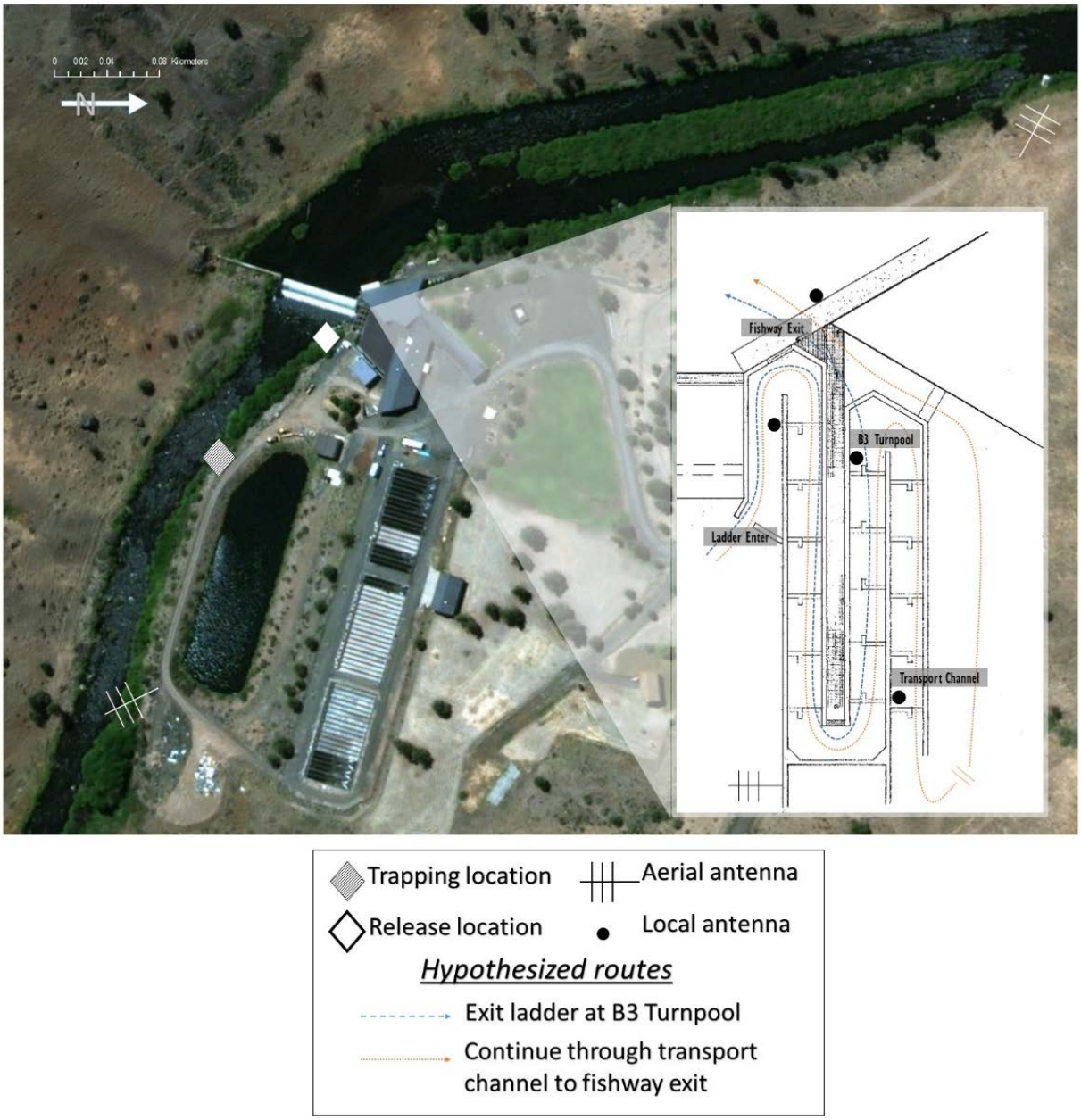

Figure 3. View of Warm Springs NFH showing the low elevation dam and fishway (inset). Locations of the telemetry stations and trap locations are noted. Hypothesized routes for lamprey upstream migration include moving throughout the fishway or exiting at a turning pool before navigating throughout the ladder.

Fixed radio telemetry stations generally consisted of the following setup: a SRX_400 Lotek Telemetry Receiver set to record approximately every 10 s (range: 8.05 s to 10.05s), powered by a 12V solar panel to charge a 12V deep-cycle battery. Gains were set between 50 and 70. The stations near the hatchery used antenna switch controls (Lotek ASP 8), which pans between each antenna with equal timing. The upstream and downstream aerial stations were also programmed to record a unique frequency used in a spring-Chinook Salmon study. A complete list of the telemetry station configurations and set gains are listed in Table 1. Telemetry stations were downloaded at least once per week. Individual tag codes were sorted to create a migration history of each fish that consisted of passage success, timing of movements, and route selection. We did not calculate passage efficiency (defined as: the number of fish that passed through the fishway relative to the number that approached; Moser et al. 2002) because of the low sample size.

Table 1. Fixed radio telemetry station location, type, and programmed settings.

Station Name	Antenna Type	Scan time	Gain	Spring-Chinook Study Frequency (kHz)	Lamprey Study Frequency (kHz)
Downstream	Aerial	8.05	60	164.340	164.200
Hatchery Downstream	Aerial	10.05	65		164.200
	Local		65		164.200
Hatchery Upstream	Local	10.05	60		164.200
	Local		60		164.200
	Local		70		164.200
Upstream	Aerial	10.05	50	164.340	164.200

Results

Trapping and tagging

In 2016, we did not initiate a radio-telemetry study because of low captures. On 1 July, one adult lamprey was captured, implanted with a HDX PIT- tag, and released immediately downstream of the hatchery fishway entrance. A PIT tag antenna array 400 m upstream of the hatchery has not detected this fish as of May 2018, although this array was not operational, due to repair and replacement, for periods of time during our study.

In 2017, we captured a total of nine lamprey. Captures occurred on five days between 21 July and 24 August. Six fish were radio- and PIT-tagged and released upon capture. Two fish were unintentionally released prior to tagging. One fish was not tagged because it displayed symptoms of disease. This fish was likely infected with *Furunculosis*, a bacterial infection found in other lamprey in the Columbia River basin (Kenneth Lujan, USFWS, *personal communication*). Symptoms of *Furunculosis* include lethargy, non-attachment, mottled coloration, and bleeding from the gills, all of which were displayed by the fish we captured.

Of the six tagged fish, four were female, two were of unknown sex. On average, fish were 604 cm (range 560-670 cm) in length, 108 cm (range: 90-150 cm) in girth, and 366 g (range: 293-492 g) in weight (Table 2).

Radio Tracking

Passage. Of the six fish radio-tagged and released, four fish moved upstream of the hatchery (Table 2). We tracked three of these lamprey through the fishway, and a fourth lamprey moved upstream but its route was not determined because it was not read on the in-ladder telemetry stations (not-operational during time of this fish movement). Two fish remained downstream but both attempted to move upstream of the hatchery, entering the fishway then returning downstream, remaining near the release site downstream of the hatchery dam at the conclusion of our tracking study.

Of the fish we tracked (n=5), all made at least one attempt to use the hatchery ladder (i.e. tag was recorded on the ladder entrance receiver). One lamprey attempted passage multiple times and moved upstream of the ladder on its third attempt.

Timing. From the tracked fish (n=5), all but one attempt was made the night immediately following their release. The exception was a lamprey whose first attempt was 2 d 11.7 h after release. All of the attempts occurred at night, between the hours of 2200 and 0006. For the three lamprey that were tracked moving upstream past the hatchery, time spent in ladder was between 0.5 and 1.05 h. Both of the lamprey that remained downstream of the hatchery for the duration of our tracking study (n = 2), were detected in the ladder, for 0.02 h and 1.85 h, before returning downstream.

Route selection. We tracked three lamprey moving upstream of the hatchery through the ladder. Two lamprey were detected on both the entrance and B3 Turning Pool local receivers. One lamprey was detected on the entrance and exit receivers. Once exiting the ladder, two lamprey were detected on the upstream aerial receiver (400 m upstream) within 0.35 and 0.4 h.

Trapping by-catch. During the 2107 trapping period, we also captured crayfish sp. (n = 218), dace (*Rhynichthys sp.*, n = 112), sculpin (*Cottus sp.*, n = 19), and juvenile salmonids (*Oncorhynchus sp.*, n = 3). In 2016, by-catch consisted of the same fish groups; however, fish were not enumerated.

Table 2. Locations and timing of unique radio-tagged lamprey as they attempted to move upstream of the barrier dam and fishway and Warm Springs National Fish Hatchery.

								Time				Total Time
Outcome	**Radio Tag ID**	**Tagged Date**	**Sex**	**Length (mm)**	**Girth (mm)**	**Weight (g)**	**# attempts**	**Before Ladder Attempts**	**In Ladder**	**Ladder to Upstream**	**Holding Downstream**	**Tracked in system**
Upstream	114	21-Jul	F	670	150	495	unk	--	--	--		1 d 10.90 h
	116	28-Jul	F	571	100	320	1	12.28 h	0.75 h	0.40 h		13.43 h
	115	14-Aug	U	617	100	370	1	2 d 11.70 h	0.53 h	0.37 h		2 d 12.60 h
	106	31-Jul	U	580	90	298	3	8.95 h 1.98 h 10 d 23.75 h	1.05 h	0.35 h		11 d 12.08 h
Downstream	107	31-Jul	F	625	110	420	1	8.70 h	<0.02 h		56 d 12.88 h	56 d 21.58 h
Unknown	117	24-Aug	F	560	95	293	1	9.53 h	1.85 h		19 d 23.80 h	20 d 11.18 h

Discussion

Our radio-tracking results at Warm Springs NFH show that lamprey can use the fishway to migrate upstream of the hatchery and barrier dam. Lamprey were able to find the ladder entrance quickly, move at night, and if successful, exit the ladder within an hour, most likely at the B3 turning pool. Our results, albeit with small sample sizes, show that at least some lamprey can effectively navigate the hatchery dam and ladder, however not all do. The hatchery dam and ladder may be a barrier to some lamprey, delaying migration when entering the ladder and navigating upstream through the ladder. Our findings suggest the LPS may improve adult lamprey passage upstream of Warm Springs NFH.

Lamprey are able to find the fishway entrance, and are moving at night. All of the tracked lamprey attempted to enter the hatchery ladder, typically the night immediately following their release, indicating that approaching and finding the ladder entrance is not a limiting factor in lamprey navigation upstream of the barrier dam and fishway. All of the attempts occurred at night, suggesting that both monitoring efforts and operations of the ladder and LPS are critical during night. The unsuccessful attempts suggest that lamprey can find the ladder entrance, however, they may be lost or exhausted before finding the first available exit (B3 turning pool) because of physical attributes of the fishway such as high velocities, lack of resting areas, or lack of suitable attachment substrate (described *in* Pacific Lamprey Technical Workgroup 2017).

We showed that lamprey can use the fishway to move upstream. The lamprey we tracked moving upstream through the fishway exited before navigating through the entire ladder, using the B3 Turning Pool. This exit is the same water elevation as the forebay and is the first option for lamprey to exit the ladder. Hypothetically, the distance lamprey using the LPS will be approximately half of the shortest route through the fishway (from the entrance to the B3 turning pool). While we had no detections of radio-tagged lamprey within the ladder further than the B3 turning pool, lamprey have been found further within the ladder in the fish holding ponds and exit raceway. In 2017, hatchery staff netted a lamprey in the upstream release raceway (which leads to the upstream exit) where the only route option was through the ladder. This fish likely navigated through the fishway, through a small opening that leads from the B4 turning pool, and into the fishway exit.

All lamprey we tracked were only detected on the river left bank. There is anecdotal evidence of lamprey navigating the barrier on the river right wall (opposite of the hatchery). We did not track any lamprey at any area other than the fishway, however our results may be biased towards fish using the ladder since both our trapping and release locations were on river left (same side as the fishway). Trapping and tracking fish on the river right side is logistically difficult due to accessibility.

This study provides some of the first information about the timing of adult lamprey movements at Warm Springs NFH and when trapping is most efficient. In 2016 and 2017, lamprey were captured between early July and late August. In the Deschutes River Basin, most adults overwinter in the Deschutes River before moving into its tributaries including the Warm Springs River beginning in early spring (Baker 2015). During the period of spring freshet, our sampling was likely less effective and therefore our captures may not be indicative of the migration timing at Warm Springs NFH. Future counts of lamprey moving through the LPS will provide more information on the timing of lamprey moving upstream in the Warm Springs River.

More lamprey were captured in 2017 compared to 2016. This is likely a reflection of higher overall adult lamprey counts in the lower Columbia River Basin. The 2017 adult lamprey passage at Bonneville Dam were among the highest years, with counts estimated at 290,468 (compared to an estimated 109,170 in 2016; USACE, unpublished data). Additionally, we increased our collection effort (i.e. number of pot traps deployed) which likely aided in more captures.

The 2017 tracking of lamprey prior to the operation of the LPS provides baseline information to assess lamprey passage at Warm Springs NFH. Using an adaptive management approach, our future objectives are to determine if the LPS is effective at facilitating adult lamprey upstream passage and provide recommendations of modifications needed, if any. With the addition of the LPS in 2018, we will monitor lamprey passage through the LPS, and develop a long-term monitoring strategy that may include cameras and/or PIT antennas. Part of our initial monitoring will include determining if the LPS has adverse effects on salmonids, particularly at the entrance of the LPS. If lamprey are not using the LPS, we will determine their preferred route selection and timing of lamprey moving upstream of the hatchery to modify the LPS design or operation in order to facilitate adult lamprey passage.

Acknowledgements

Study funded by: U.S. Fish and Wildlife Service and in partnership with the Confederated Tribes of Warm Springs.

Literature Cited

Baker, C., A. Wildbill, J. Santos. 2015. Evaluate Status and Limiting Factors of Pacific Lamprey in the lower Deschutes River, Fifteenmile Creek and Hood River. Confederated Tribes of Warm Springs Reservation, Branch of Natural Resources Fisheries Research. Annual Report BPA Project No. 2011-014-00.

Cates, B.C. 1992. Warm Springs National Fish Hatchery evaluation and anadromous fish study on the Warm Springs Indian Reservation, 1975-1989. Progress report of the U. S. Fish and

Chelgren, N. D. and J. B. Dunham. 2015. Connectivity and conditional models of access and abundance of species in stream networks. Ecological Applications 25:1357–1372.

Clemens. B.J., Richard J. Beamish, Kelly C. Coates, Margaret F. Docker, Jason B. Dunham, Ann E. Gray, Jon E. Hess, Jeffrey C. Jolley, Ralph T. Lampman, Brian J. McIlraith, Mary L. Moser, Joshua G. Murauskas, David L. G. Noakes, Howard A. Schaller, Carl B. Schreck, Steven J. Starcevich, Bianca Streif, Stan J. van de Wetering, Joy Wade, Laurie A. Weitkamp & Lance A. Wyss (2017) Conservation Challenges and Research Needs for Pacific Lamprey in the Columbia River Basin, Fisheries, 42:5, 268-280

Gallion, D. and J. Skalicky. 2014. Pacific Lamprey and Bull Trout Passage Assessment at Warm Springs National Fish Hatchery 2014 Report. U.S. Fish and Wildlife Service, Vancouver, Washington. 42 pp.
Jackson, A., and M. L. Moser. 2012. Low-elevation dams are impediments to adult Pacific Lamprey spawning migrations in the Umatilla River, Oregon. North American Journal of Fisheries Management 32:548-556.

Jackson, A. and M. Moser. 2012. Low-Elevation Dams are Impediments to Adult Pacific Lamprey Spawning Migration in the Umatilla River, Oregon. North American Journal of Fisheries Management 32:3 p.548-556.

Keefer, M. L., C. T. Boggs, C. A. Peery, and C. C. Caudill. 2013. Factors affecting dam passage and upstream distribution of adult Pacific Lamprey in the interior Columbia River basin. Ecology of Freshwater Fish 22:1–10.

Liedtke, T.L., J.W. Beeman, and L.P. Gee. 2012. A standard operating procedure for the surgical implantation of transmitters in juvenile salmonids. U.S. Geological Survey Open-File Report 212-1267, 50 p.

Luzier, C.W., G.S. Silver, T.A. Whitesel. 2005. Evaluate Habitat Use and Population Dynamics of Lamprey in Cedar Creek. Annual Report for BPA Project 2000-014-00.

Luzier, C.W., H.A. Schaller, J.K. Brostrom, C. Cook-Tabor, D.H. Goodman, R.D. Nelle, K. Ostrand and B. Streif. 2011. Pacific Lamprey (*Entosphenus tridentatus*) Assessment and Template for Conservation Measures. U.S. Fish and Wildlife Service, Portland, Oregon. 282 pp.

Moser, M. L., A. L. Matter, L. C. Stuehrenberg & T. C. Bjornn. 2002. Use of an extensive radio receiver network to document Pacific lamprey (Lampetra tridentata) entrance efficiency at fishways in the Lower Columbia River, USA Hydrobiologia 483: 45–53, 2002.

Moser, M.L., M.L. Keefer, H.T. Pennington, D.A. Ogden, and J.E. Simonson. 2011. Development of Pacific lamprey fishways at a hydropower dam. Fisheries Management and Ecology 18 190-200.

Moser, M. L., A. D. Jackson, M. C. Lucas, and R. P. Mueller. 2015. Behavior and potential threats to survival of migrating lamprey ammocoetes and macrophthalmia. Reviews in Fish Biology and Fisheries 25:103–116.

Pacific Lamprey Technical Workgroup. 2017. Practical guidelines for incorporating adult Pacific Lamprey passage at fishways. White Paper. www.fws.gov/pacificlamprey/mainpage.cfm.

U.S. Fish and Wildlife Service. 2004. 90-Day finding on a petition to list three species of lamprey as threatened or endangered. Federal Register: December 27, 2004 (Volume 69, Number 2) Proposed Rules pages 77158-177167.

U.S. Fish and Wildlife Service. 2006. Warm Springs National Fish Hatchery Assessments and Recommendations Final Report. Pacific Region Columbia Basin Hatchery Review Team.

Appendix I. Design and Install of the Lamprey Passage System

The following is a description of the Lamprey Passage System design and installation. Installation occurred from 11-15 September 2017. The LPS began operation on 10 May 2018.

The design of the Lamprey Passage System was initially sketched by Jim Simonson (NOAA), technical drawings were produced in the USFWS Region 1 Headquarters, and fabrication drawings were completed by Yanke Machine Shop (Boise, ID), who also fabricated and installed the LPS. Underwater dive installation was contracted to Cascade Dive Co. (Pasco, WA). Plumbing was completed by the USFWS Columbia River Gorge complex staff led by Jorge Alcala.

The LPS is constructed of varying types and thicknesses of aluminum, which are listed in the fabrication drawings. For installation, water to the fishway was turned off (*note: ammocoetes were observed in sediment accumulations within the dry fishway*). The lower flume section was lowered into the raceway and secured to the concrete by underwater divers using pneumatic drills and stainless steel bolts. Individual sections of the LPS were bolted together as the installation progressed and then sealed with silicon at the seams (other options for the future could include neoprene gaskets). A 4” 150# stainless steel flanged ball valve (ASTM A351, ball and stem 316 S.S. with 1/8” rubber gasket for 4”-150# flange end, 8 bolts: 5/8”11 nc 18-8 S.S. bolts X 3 ¼” w/ HN, LW & FW; purchased from Yanke Machine Shop) was installed at the rest box to drain water for winterization. Water flow to the upwelling box is 80 gal/min and is provided by a Goulds 85GS30CBM 3HP 8STG 4” H.C. SUB pump (purchased from Xylem Water Solutions, Tualatin, OR), installed behind the hatchery intake screen. Plumbing from the submersible pump to the LPS upwelling box (on the fishway deck) is supplied through 3” PVC. An exit tube made of 8”corrugated plastic is attached to the 8” aluminum connector welded to the upwelling box. Modifications are expected of the exit tube and nearby flume sections to install a PIT reader and camera for monitoring.

Attached below are the following LPS install images:
Installation Pictures (3)
Design Sketches by Jim Simonson, NOAA (4)
Technical Drawings by USFWS (6)
Fabrication Drawings by Yanke Machine Co. (10)

Figure a

Figure a. Installation was ordered from the in-water portion of the LPS (the lower half) to the upper half. This section was bolted to the fishway by an underwater diver.

Figure b. This is the middle and upper parts of the LPS. The final section (far right) is an up-welling box that feeds water down the LPS towards both the downstream and upstream.

Figure c. The LPS installation was completed in September 2017. The plumbing for the LPS was completed April 2018 and marked the beginning of the operation of the LPS.

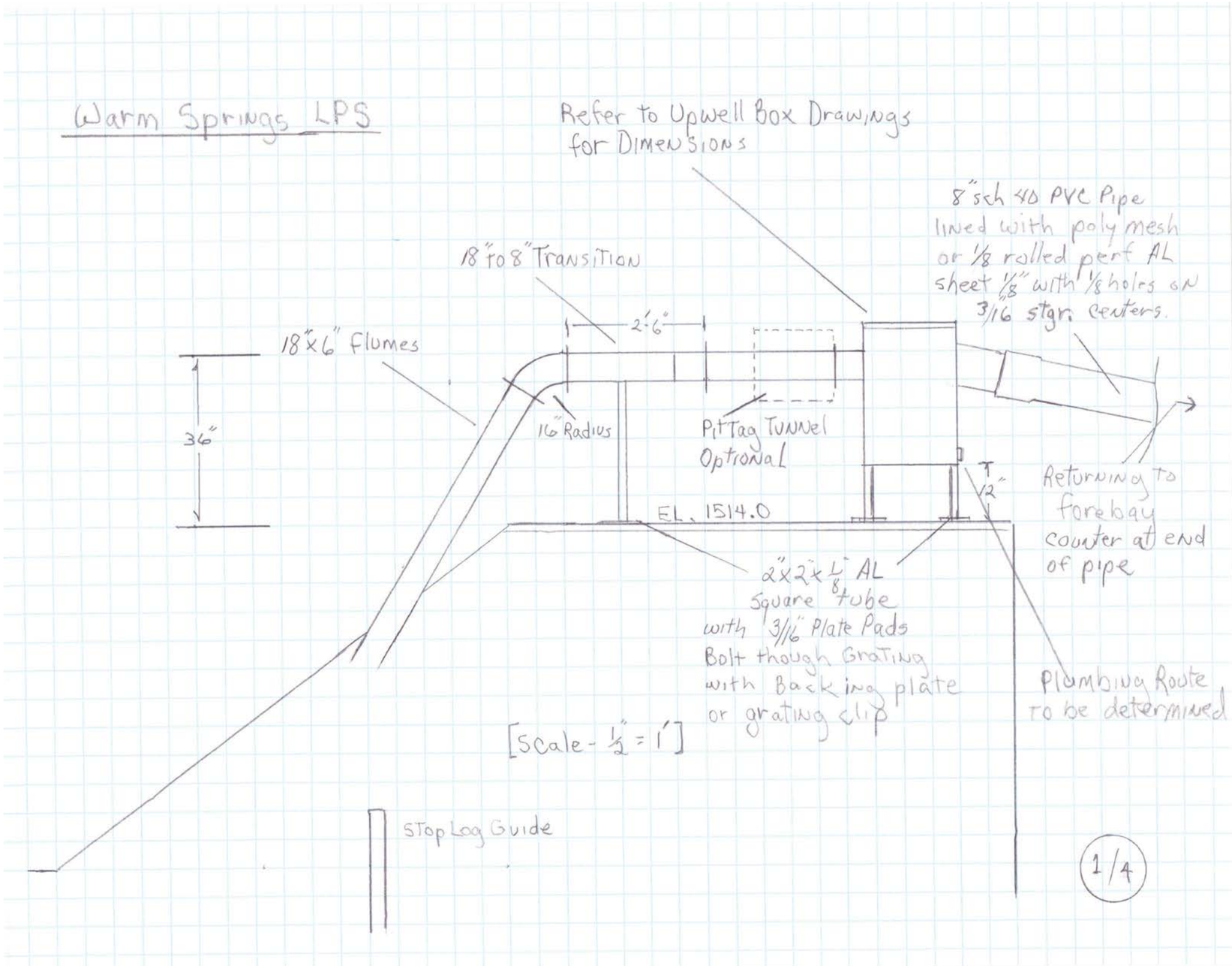
Warm Springs LPS
Refer to Upwell Box Drawings for Dimensions
8" sch 40 PVC Pipe lined with poly mesh or 1/8 rolled perf AL sheet 1/8" with 1/8 holes on 3/16 stgr. centers.
18" to 8" Transition
2'-6"
18"x6" Flumes
36"
16" Radius
Pit Tag Tunnel Optional
EL. 1514.0
12"
Returning to forebay counter at end of pipe
2"x2"x1/8" AL Square tube with 3/16" Plate Pads Bolt though Grating with Backing plate or grating clip
Plumbing Route to be determined
[Scale - 1/2" = 1']
Stop Log Guide
1/4

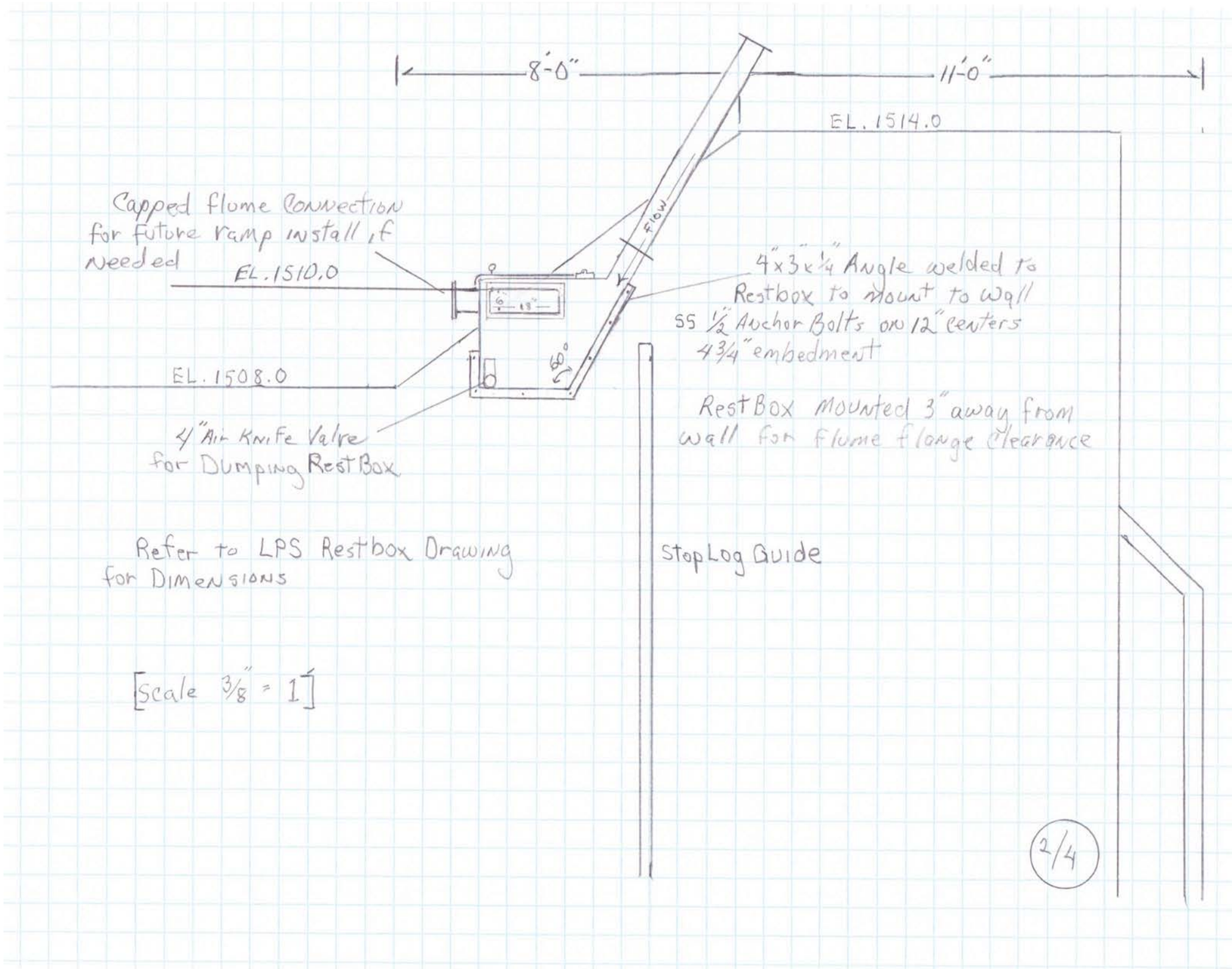
8'-0"
11'-0"
EL. 1514.0
Capped flume Connection for future ramp install if needed
EL. 1510.0
FLOW
4"x3"x1/4" Angle welded to Restbox to mount to wall
SS 1/2" Anchor Bolts on 12" centers 4 3/4" embedment
EL. 1508.0
60°
Rest Box mounted 3" away from wall for flume flange clearance
4" Air Knife Valve for Dumping Rest Box
Refer to LPS Restbox Drawing for Dimensions
Stop Log Guide
[Scale 3/8" = 1']
2/4

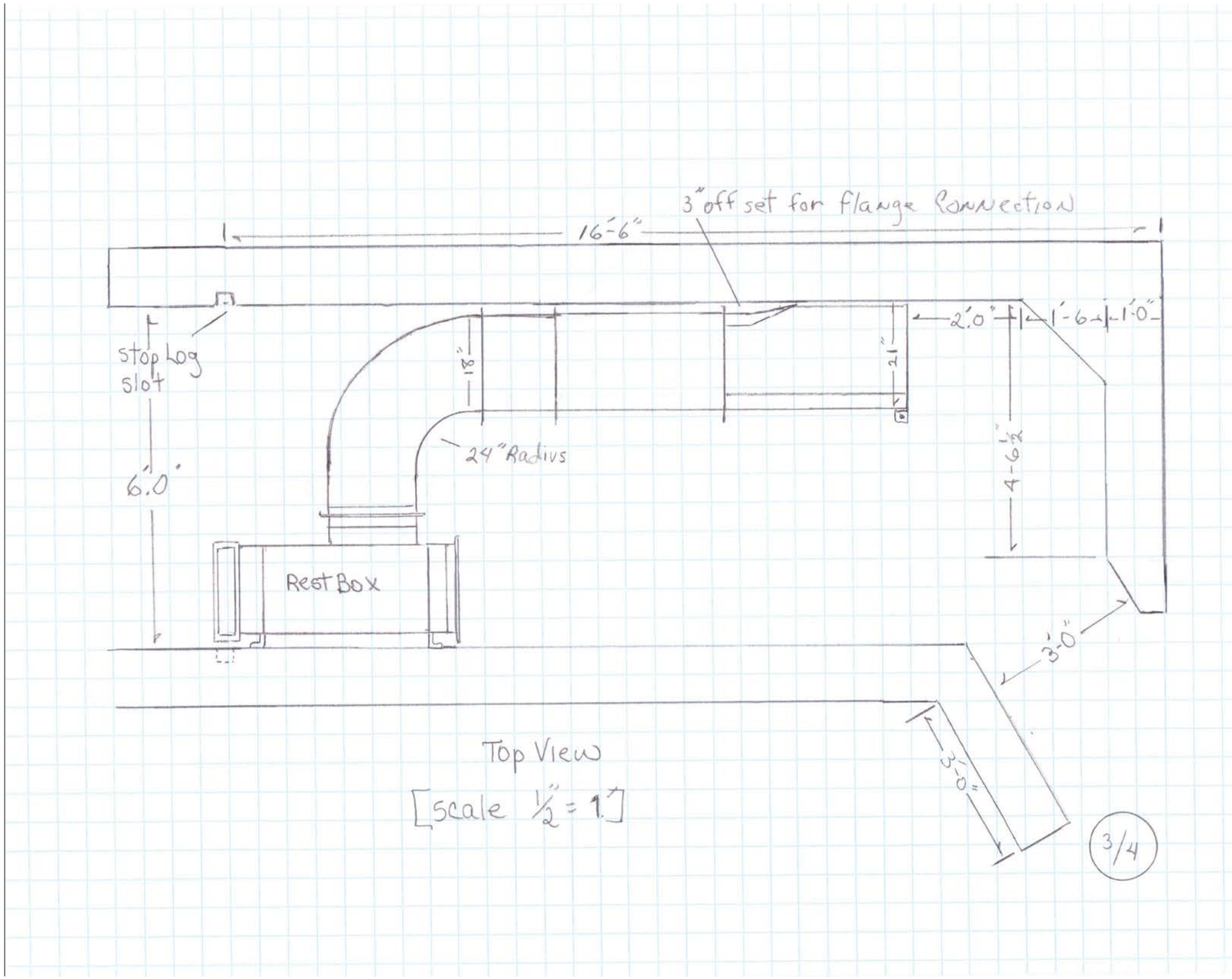
3" off set for flange connection
16'-6"
stop log slot
6'.0"
18"
24" Radius
Rest Box
2'.0"
1'-6"
1'-0"
21"
4'-6 1/8"
3'-0"
3'-0"
Top View
[scale 1/2" = 1']
3/4

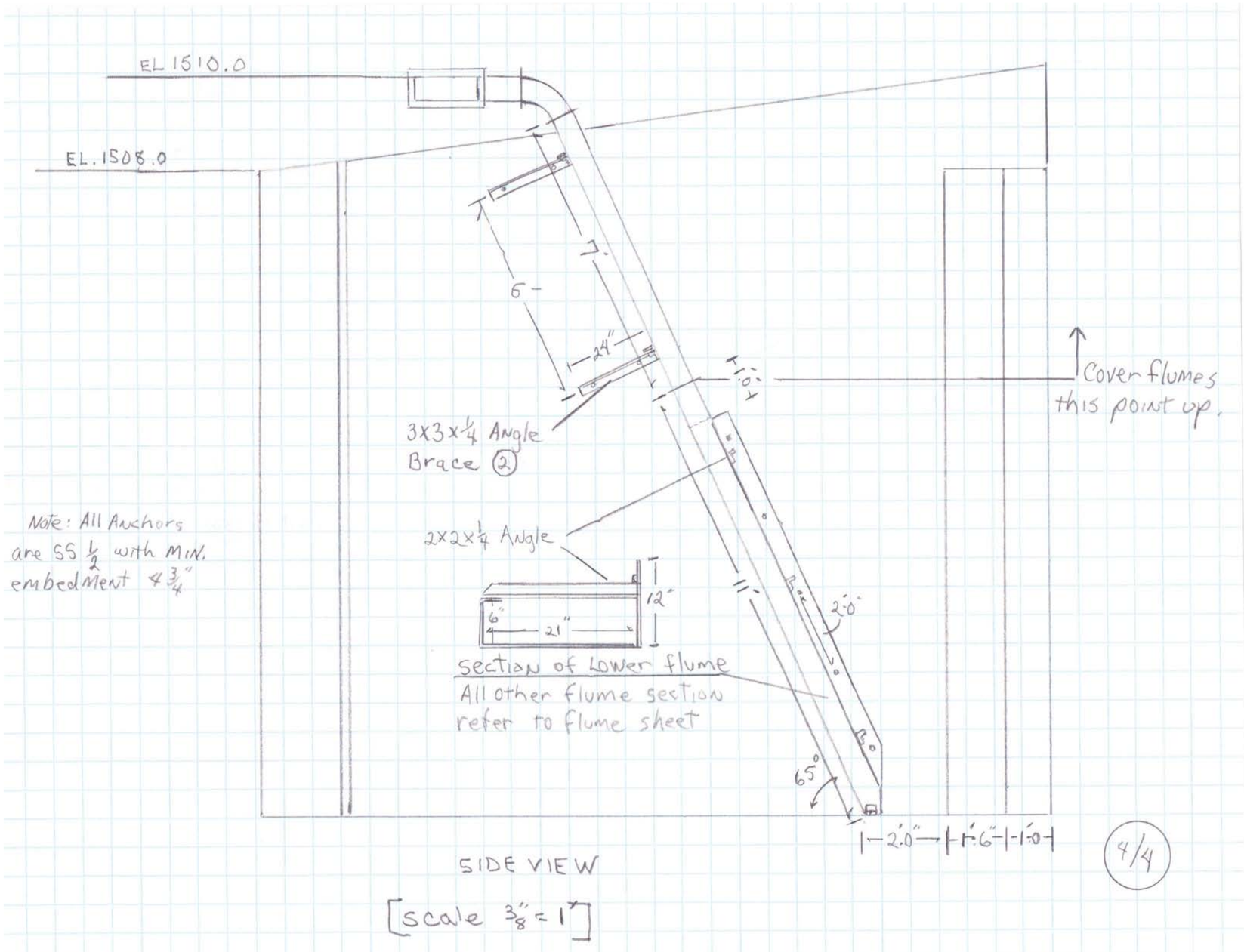
EL 1510.0
EL. 1508.0
6'
24"
1'-0"
Cover flumes this point up.
3x3x1/4 Angle Brace (2)
2x2x1/4 Angle
Note: All Anchors are SS 1/2 with MIN. embedment 4 3/4"
12"
6"
21"
2'-0"
Section of Lower flume
All other flume section refer to flume sheet
65°
2'-0"
1'-6"
1'-0"
4/4
SIDE VIEW
[scale 3/8" = 1']

U.S. FISH & WILDLIFE SERVICE
DEPARTMENT OF THE INTERIOR

LAMPREY PASSAGE SYSTEM

WARM SPRING NATIONAL FISH HATCHERY

WASCO COUNTY, OREGON

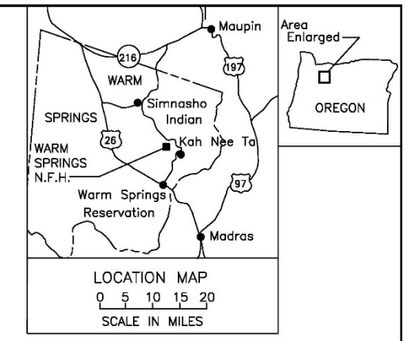

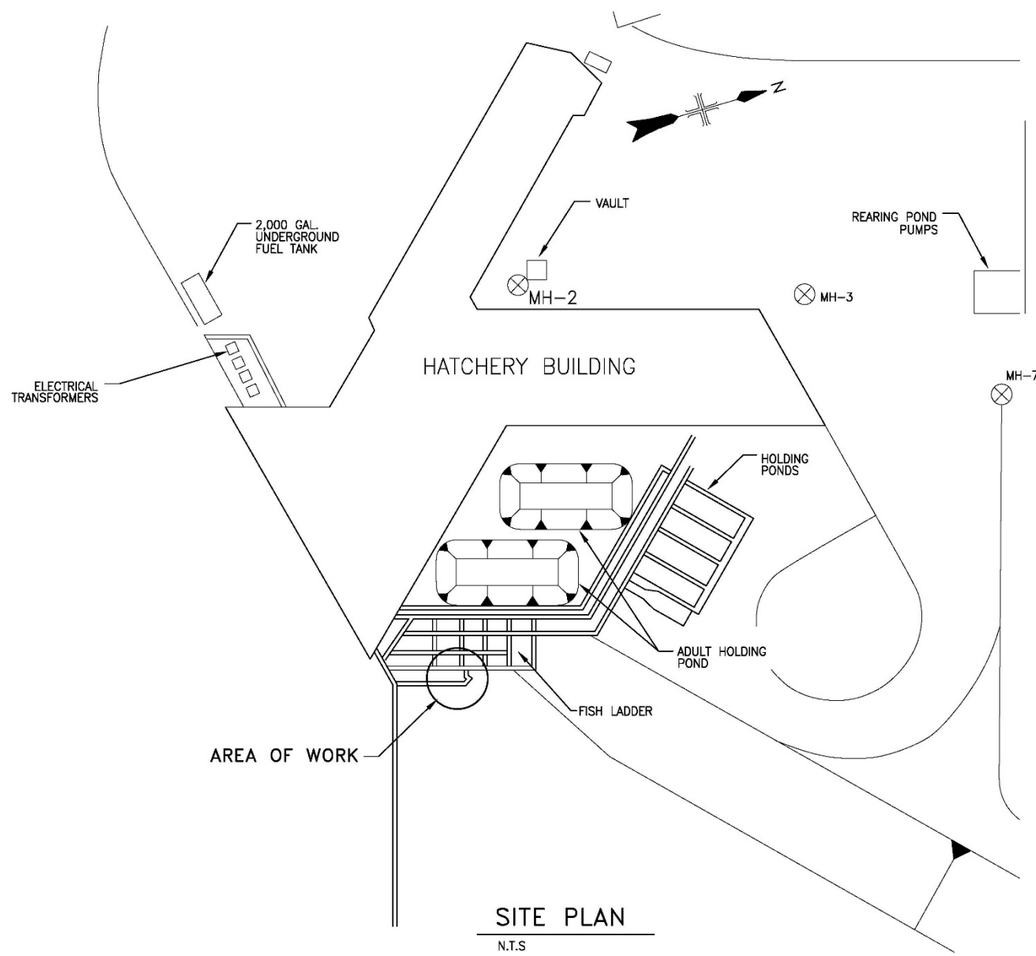

SITE PLAN
N.T.S

DRAWING INDEX		
TITLE	DWG No.	SHEET No.
SITE PLAN & COVER SHEET	1R-OR-772-265-1.0	1 OF 6
OVERALL PLAN VIEW	1R-OR-772-265-2.0	2 OF 6
UPWELL BOX & REST BOX ELEVATION	1R-OR-772-265-3.0	3 OF 6
LOWER FLUME ELEVATION	1R-OR-772-265-4.0	4 OF 6
UPWELL & REST BOX DETAILS	1R-OR-772-265-5.0	5 OF 6
STANDARD FLUME ELEV. & DETAILS	1R-OR-772-265-6.0	6 OF 6

ABBREVIATIONS

AL.	ALUMINUM
CTR.	CENTER
C.C.	CENTER TO CENTER
DIA.	DIAMETER
EL./ELEV.	ELEVATION
MIN.	MAXIMUM
PER.	PERFORATED
R	RADIUS
SCH.	SCHEDULE
S.S.	STAINLESS STEEL
STAGG.	STAGGERED

DETAILING CONVENTIONS

SECTIONS:
SECTION LETTER
SHEET WHERE DETAIL IS SHOWN
SHEET WHERE DETAIL IS TAKEN

DETAILS:
DETAIL NUMBER
SHEET WHERE SECTION IS SHOWN
SHEET WHERE SECTION IS TAKEN

VERIFY SCALE
THIS BAR IS ONE INCH ON ORIGINAL DRAWING
0" 1"
ADJUST SCALES ACCORDINGLY, IF NOT ONE INCH ON THIS SHEET

REV.	DATE	DESCRIPTION	BY

UNITED STATES DEPARTMENT OF THE INTERIOR
FISH AND WILDLIFE SERVICE
REGIONS 1, 7 & 8 OFFICE OF ENGINEERING
PORTLAND, OREGON

SUBMITTED BY PROJECT MANAGER
REVIEWED FOR SAFETY COMPLIANCE
REVIEWED FOR ENVIRONMENTAL COMPLIANCE
REVIEWED FOR ADA COMPLIANCE
CERTIFIED 10 CFR 435 COMPLIANCE (ENERGY)
SUBMITTED BY REGIONAL ENGINEER
PROGRAMMATIC REVIEW

WARM SPRING
NATIONAL FISH HATCHERY
LAMPREY PASSAGE SYSTEM
SITE PLAN
COVER SHEET

WASCO COUNTY OREGON

SURVEYED	DESIGNED	DRAWN	CHECKED
		GAH	

DATE 6/1/15
DRAWING NO. 1R-OR-772-265-1.0

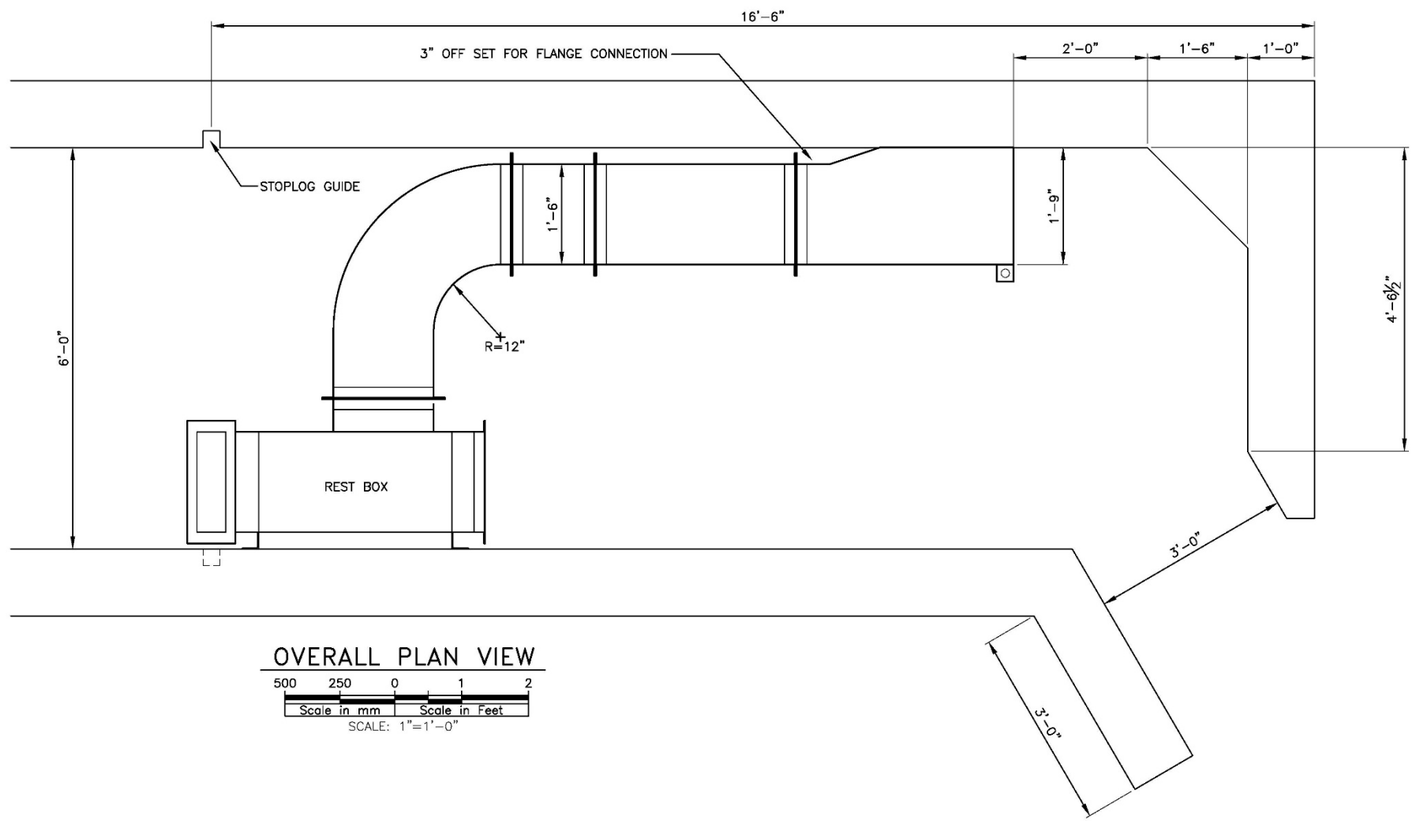

OVERALL PLAN VIEW

500 250 0 1 2

Scale in mm | Scale in Feet

SCALE: 1"=1'-0"

VERIFY SCALE
THIS BAR IS ONE INCH ON ORIGINAL DRAWING
0" ——— 1"
ADJUST SCALES ACCORDINGLY, IF NOT ONE INCH ON THIS SHEET

REV.	DATE	DESCRIPTION	BY
△			

WARM SPRING N.F.H.

LAMPREY PASSAGE SYSTEM — PLAN

OVERALL PLAN VIEW

DESIGNED	DRAWN	CHECKED	DATE	DRAWING NO.
	GAH		6/1/15	1R-OR-772-265-2.0

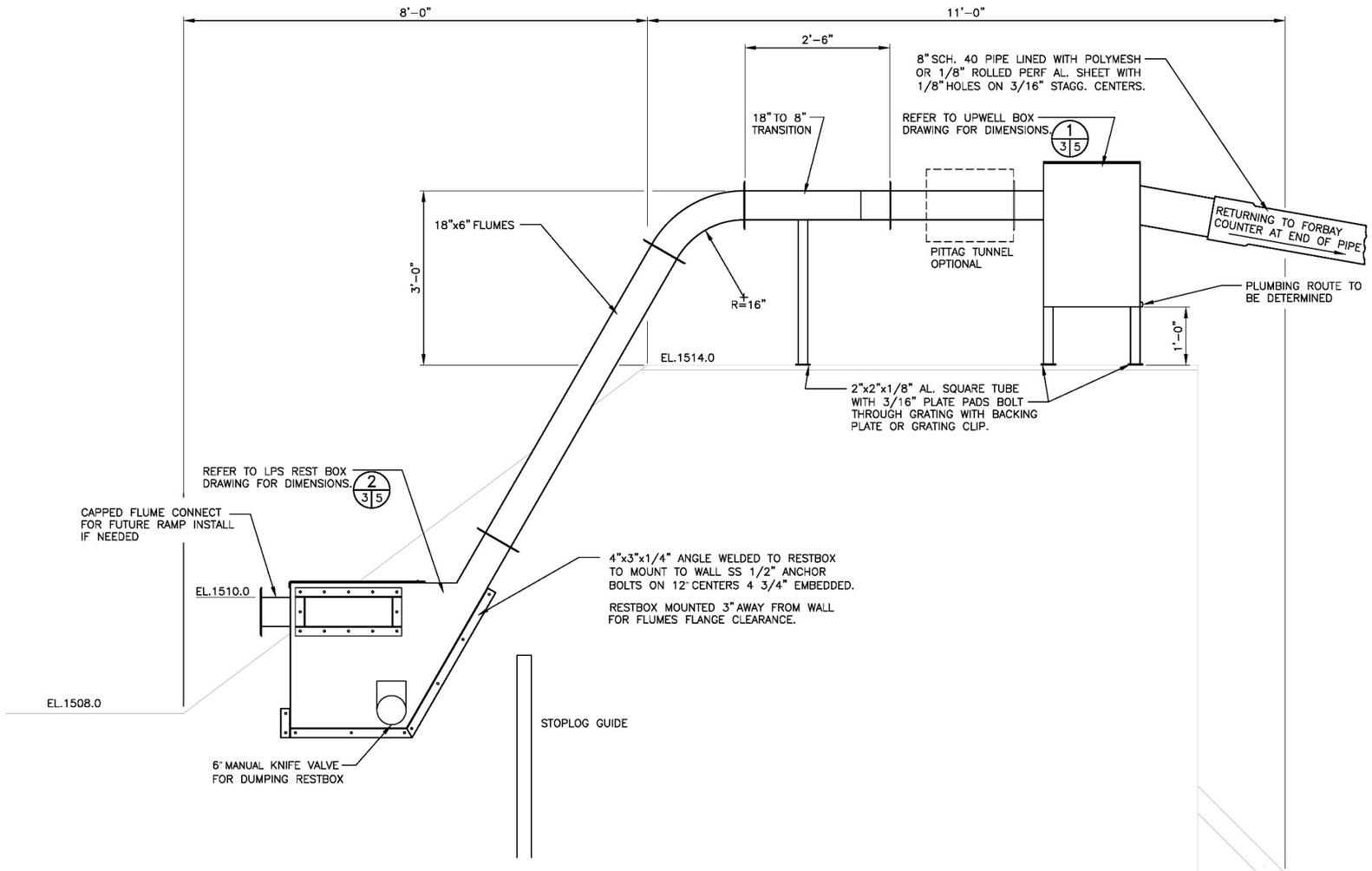

UPWELL & REST BOX ELEVATIONS

500 250 0 1 2
Scale in mm | Scale in Feet

VERIFY SCALE
THIS BAR IS ONE INCH ON ORIGINAL DRAWING 0" ——— 1" ADJUST SCALES ACCORDINGLY, IF NOT ONE INCH ON THIS SHEET

REV.	DATE	DESCRIPTION	BY
△			

WARM SPRING N.F.H.

LAMPREY PASSAGE SYSTEM
UPWELL BOX & REST BOX ELEVATIONS — ELEVATIONS

DESIGNED	DRAWN	CHECKED	DATE	DRAWING NO.
	GAH		6/1/15	1R-OR-772-265-3.0

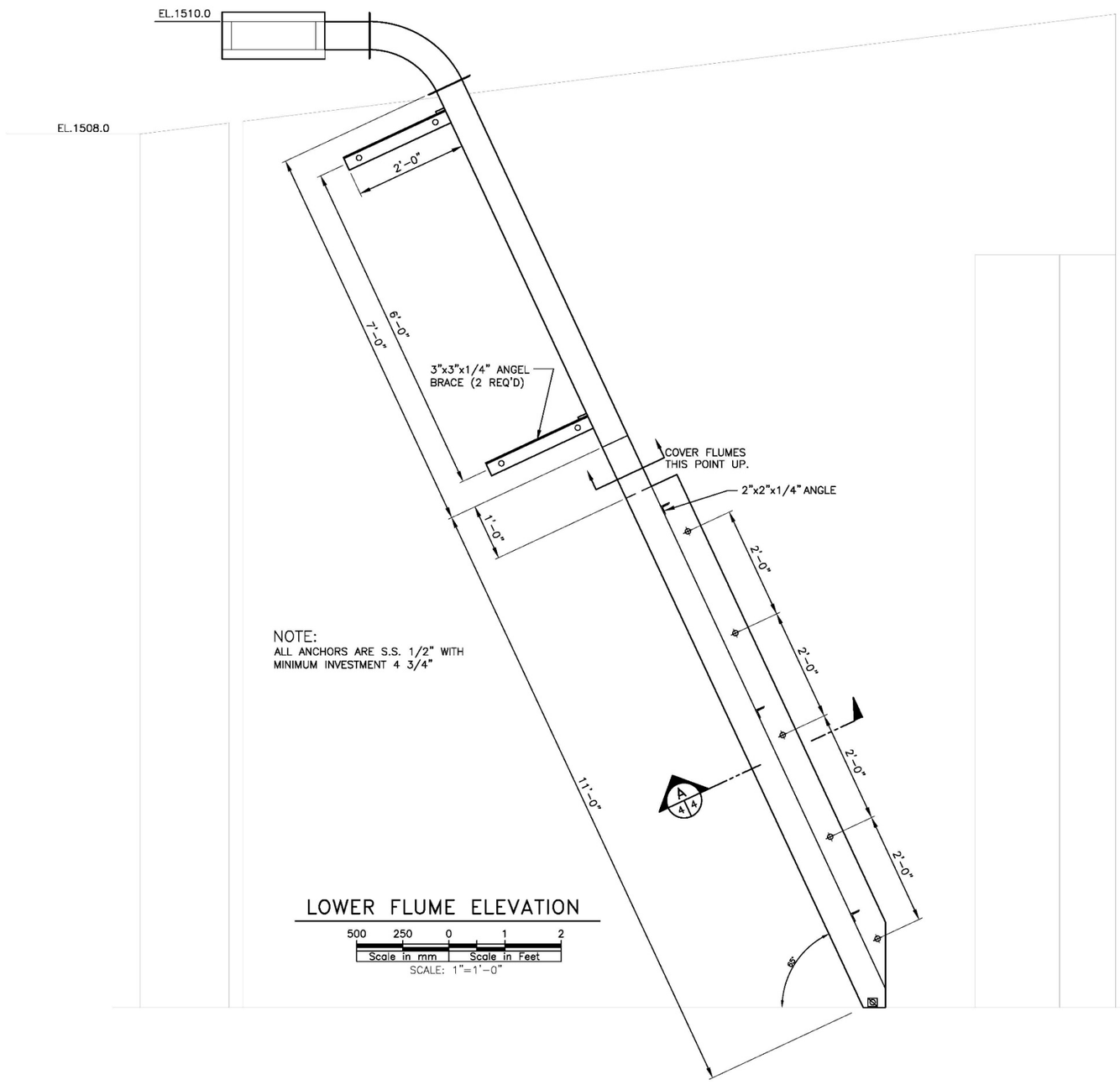

NOTE:
ALL ANCHORS ARE S.S. 1/2" WITH MINIMUM INVESTMENT 4 3/4"

LOWER FLUME ELEVATION

500 250 0 1 2
Scale in mm | Scale in Feet
SCALE: 1"=1'-0"

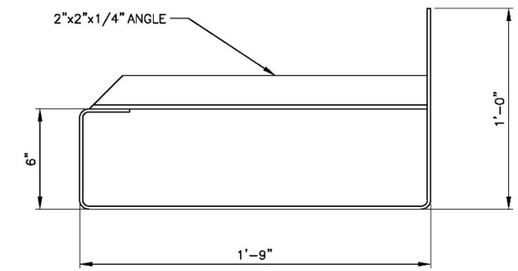

LOWER FLUME SECTION (A 4 4)

ALL OTHER FLUME SECTIONS PREFERRED TO FLUMES

200 100 50 0 3 6 12
Scale in Millimeters | Scale in Inches
SCALE: 3"=1'-0"

VERIFY SCALE
THIS BAR IS ONE INCH ON ORIGINAL DRAWING 0" ——— 1" ADJUST SCALES ACCORDINGLY, IF NOT ONE INCH ON THIS SHEET

REV.	DATE	DESCRIPTION	BY
△			

WARM SPRING N.F.H.

LAMPREY PASSAGE SYSTEM
LOWER FLUME ELEVATION

FLUME SECTION

DESIGNED	DRAWN	CHECKED	DATE	DRAWING NO.
	GAH		6/1/15	1R-OR-772-265-4.0

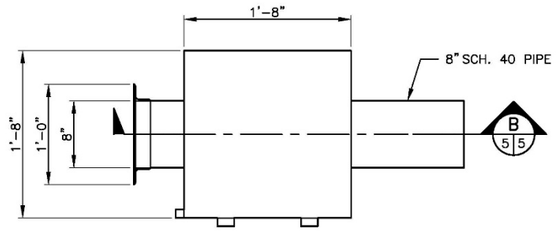

TOP PLAN

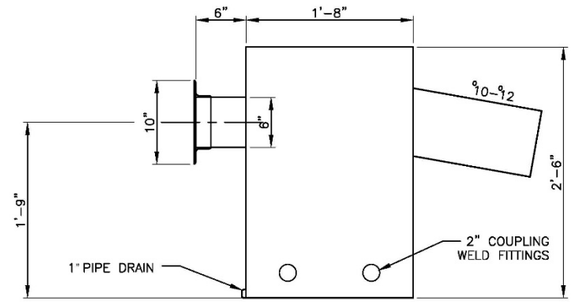

SIDE ELEVATION

1 5 3 UPWELL BOX

12 6 0 100 200 300
Scale in Inches Scale in mm
SCALE: 1 1/2"=1'-0"

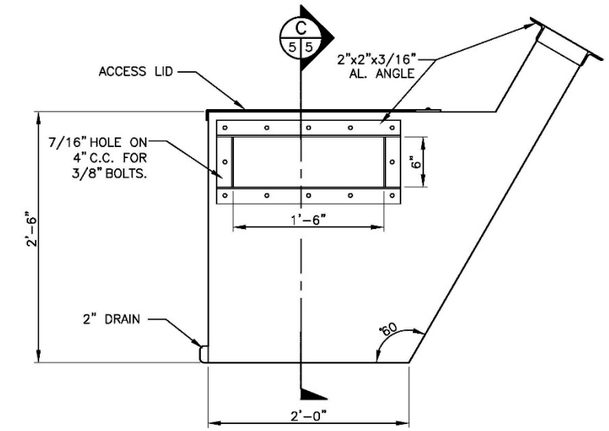

SIDE VIEW

2 5 3 REST BOX

12 6 0 100 200 300
Scale in Inches Scale in mm
SCALE: 1 1/2"=1'-0"

NOTE:
DIMENSIONS CAN BE CHANGED TO FIT DESIGN. ACCESS LID NOT SHOWN: .125" AL. SHEET WITH PIANO HING. FIELD VERIFY ALL DIMENSION AND FLUME ANGLE.

MATERIAL:
3/16" ALUMINUM SHEET/ALLOY 5052
2"x2"x3/16" AL. ANGLE / ALLOY 6061

DIFFUSER:
PERF. PLATE – 3/16" DIA. 1/2" STAGG. CTRS.
50% O/A .125" AL. SHEET 8" SCH. 40 AL. PIPE
POLYETHYERE DIAMOND MESH.
McMASTER-CARR #9314T35

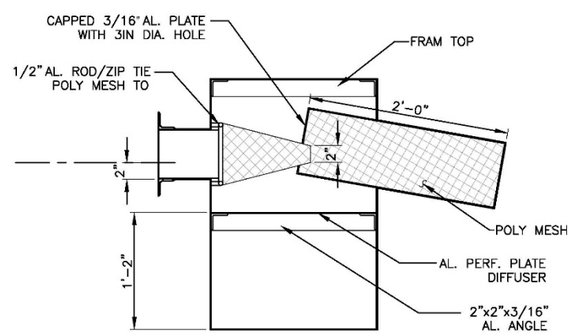

B 5 5 SECTION

12 6 0 100 200 300
Scale in Inches Scale in mm
SCALE: 1 1/2"=1'-0"

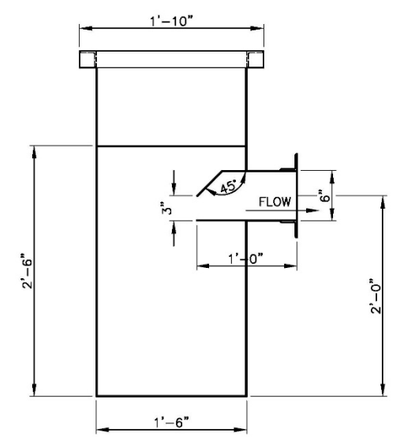

NOTE:
DIRECTION & DIMENSIONS CAN BE CHANGED TO FIT DESIGN.

MATERIAL:
3/16" AL. SHEET/ALLOY 5052
LID – 1/8" AL. SHEET / ALLOY 5052
2"x2"x3/16" AL. ANGLE / ALLOY 6061

C 5 5 SECTION

12 6 0 100 200 300
Scale in Inches Scale in mm
SCALE: 1 1/2"=1'-0"

VERIFY SCALE
THIS BAR IS ONE INCH ON ORIGINAL DRAWING
0" 1"
ADJUST SCALES ACCORDINGLY, IF NOT ONE INCH ON THIS SHEET

REV.	DATE	DESCRIPTION	BY
△			

WARM SPRING N.F.H.

LAMPREY PASSAGE SYSTEM
UPWELL BOX & REST BOX DETAILS — SECTION

DESIGNED	DRAWN	CHECKED	DATE	DRAWING NO.
	GAH		6/1/15	1R-OR-772-265-5.0

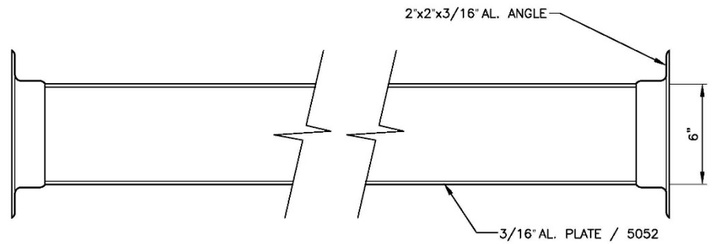

SIDE ELEVATION

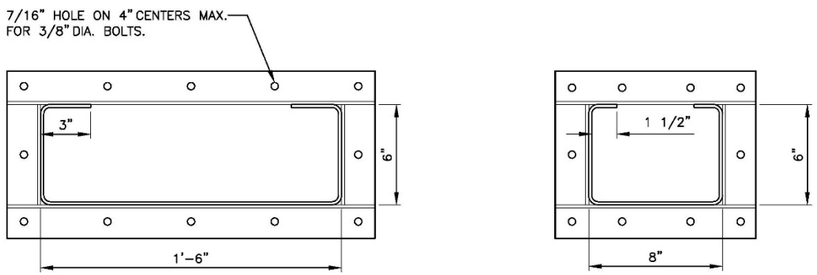

END ELEVATIONS

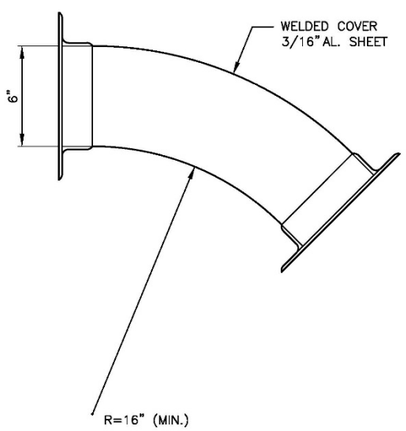

TYPICAL ELBOW

ELBOW ANGLES MAY CHANGE TO FIT DESIGN BUT 16" RADIUS REMAINS THE SAME.

NOTES:
END VIEWS ARE COMMON FLUME SIZES. STRAIGHT FLUME SECTIONS ARE 12'-0" MAX. LENGTH.

MATERIALS:
3/16" ALUMINUM SHEET/ALLOY 5052
2"x2"x3/16" AL. ANGLE / ALLOY 6061
ALL FASTNERS ARE STAINLESS STEEL
1/8" NEOPRENE RUBBER GASKETS (NOT SHOWN)

ALL FLUMES ARE COVERED TO WATER LINER 1/8" AL. SHEET/5051 AND POP RIVETED OR HINGED FOR INSPECTION.

FLUME ELEVATIONS

200 100 50 0 3 6 12
Scale in Millimeters | Scale in Inches
SCALE: 3"=1'-0"

VERIFY SCALE
THIS BAR IS ONE INCH ON ORIGINAL DRAWING 0" ——— 1" ADJUST SCALES ACCORDINGLY, IF NOT ONE INCH ON THIS SHEET

REV.	DATE	DESCRIPTION	BY
△			

WARM SPRING N.F.H.

LAMPREY PASSAGE SYSTEM
STANARD FLUME ELEVATIONS — DETAIL

DESIGNED	DRAWN	CHECKED	DATE	DRAWING NO.
	GAH		6/1/15	1R-OR-772-265-6.0

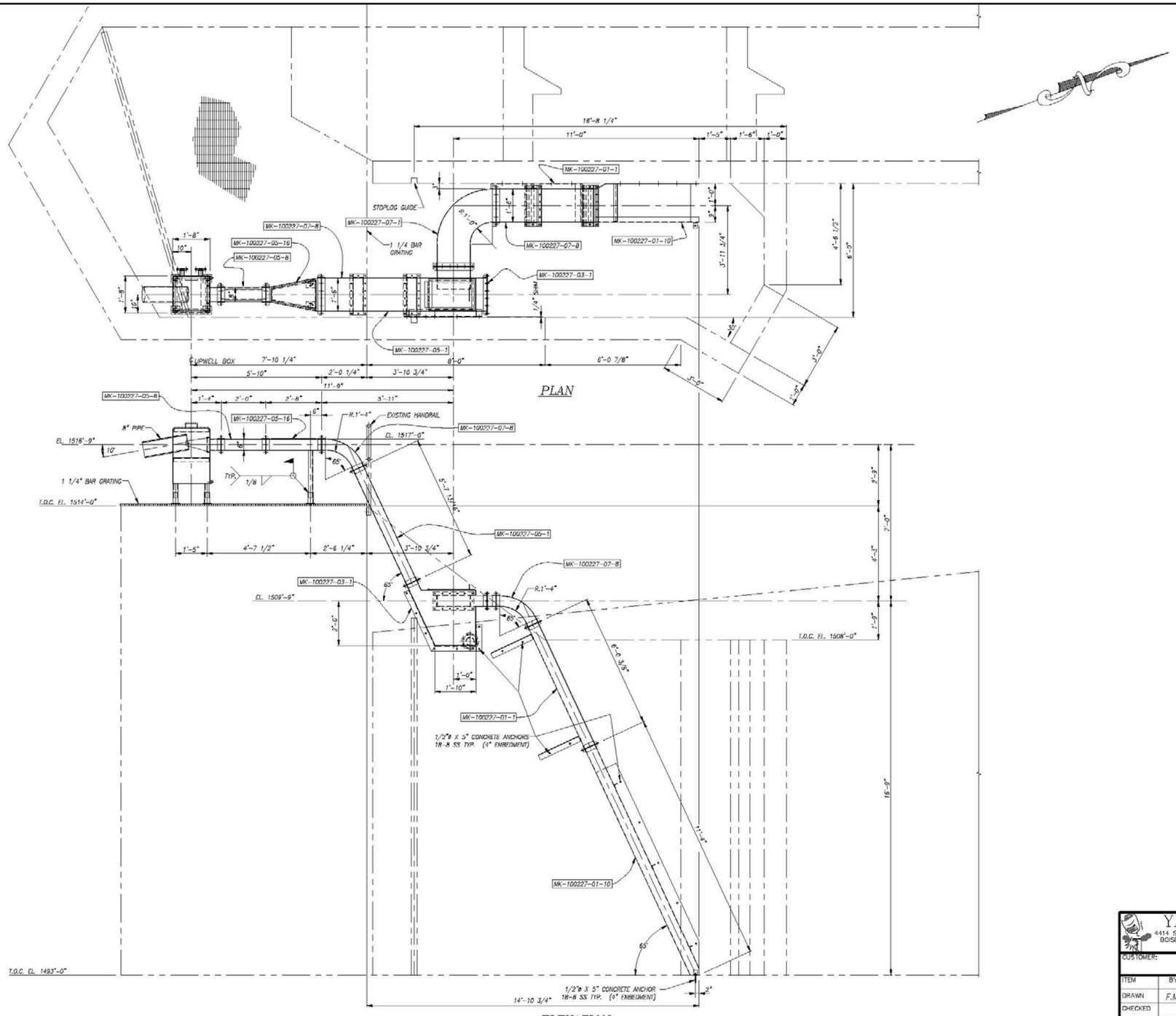

RELEASE FOR
FABRICATION
MARCH 9, 2016
Yanke Machine Shop, Inc.
W.O. #100227

NO.	REVISION	BY	DATE
△			
△			
△			
△			
△			

YANKE MACHINE SHOP, INC.
4414 SO. GEKELER LANE ~ BOISE, IDAHO 83716 ~ P.O. BOX 5405 BOISE, IDAHO 83705 ~ PHONE (208) 342-6901 FAX (208) 338-2233
WWW.YANKEMACHINE.COM ~ E-MAIL YMS@YANKEMACHINE.COM

CUSTOMER: U.S. FISH & WILDLIFE SERVICE

ITEM	BY	DATE
DRAWN	F.M.	3/2/16
CHECKED		
APPROVED		

WARM SPRINGS NATIONAL FISH HATCHERY
LAMPREY PASSAGE SYSTEM
GENERAL ARRANGMENT

SCALE 1/4"=1'-0"
DRAWING NO. 100227-E1
REVISION 0

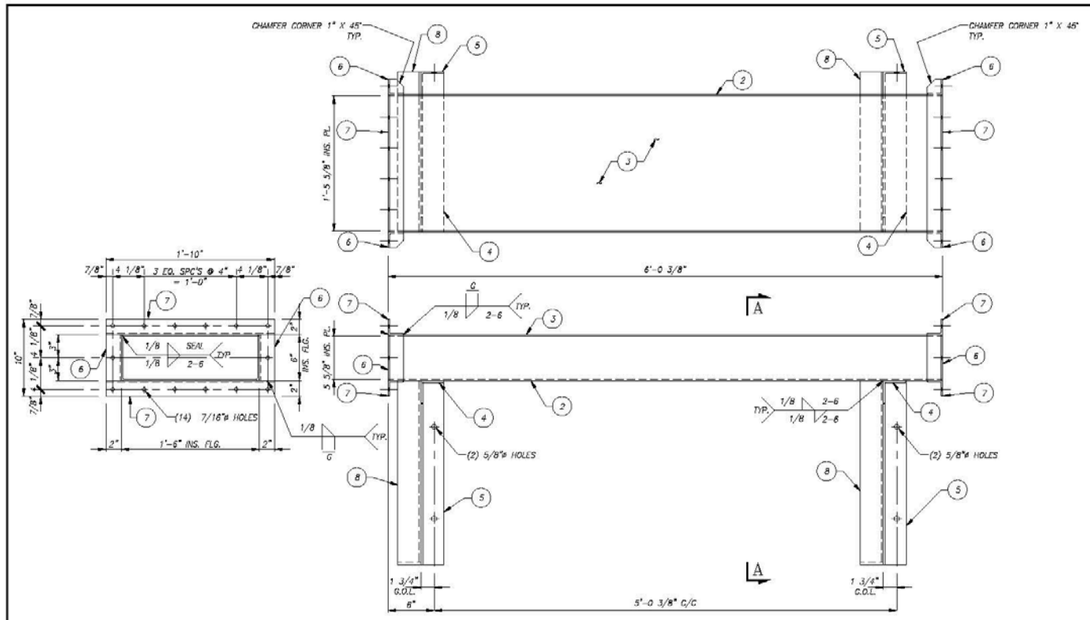

MK-100227-01-1 ~ ONE REQ'D.

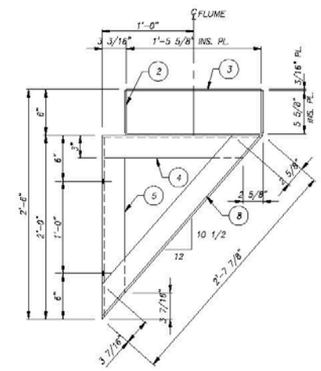

SECTION A-A

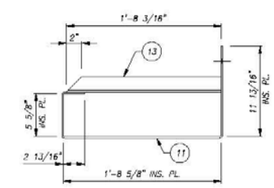

SECTION B-B

ITEM	NO. REQ'D	DESCRIPTION			LENGTH	TOTAL QUANT.	UNIT WT.	TOTAL WT.
	1	MK-100227-01-1~ LOWER FLUME						93
2	1	PL. 3/16 X 2'-4 7/8" (BEND)		ALUM. 5052-H32	6'-0 3/8"	14.51	2.66	39
3	1	PL. 3/16 X 1'-5 5/8"		ALUM. 5052-H32	6'-0 3/8"	8.86	2.66	24
4	2	L 3 X 3 X 1/4	(MITER)	ALUM. 6061-T6	1'-9"	3.5'	1.68	6
5	2	L 3 X 3 X 1/4	(MITER-COPE)	ALUM. 6061-T6	1'-11 3/4"	3.96'	1.68	7
6	4	L 2 X 2 X 3/16		ALUM. 6061-T6	0'-6"	2.0'	0.85	2
7	4	L 2 X 2 X 3/16		ALUM. 6061-T6	1'-10"	7.33'	0.85	6
8	2	L 3 X 3 X 1/4	(MITERED)	ALUM. 6061-T6	2'-7 7/8"	5.31'	1.68	9
	1	MK-100227-01-10~ LOWER FLUME						121
11	1	PL. 3/16 X 3'-4 7/8" (BEND)		ALUM. 5052-H32	11'-4"	38.61	2.66	103
12	1	PL. 3/16 X 0'-5 13/16" (BEND)		ALUM. 5052-H32	1'-2 3/8"	0.58	2.66	2
13	3	L 2 X 2 X 1/4	(MITERED)	ALUM. 6061-T6	1'-8 3/16"	5.05'	1.11	6
14	1	L 3 X 3 X 1/4		ALUM. 6061-T6	0'-3"	0.17'	1.68	6
8	2	L 2 X 2 X 3/16		ALUM. 6061-T6	0'-6"	1.0'	0.85	1
7	2	L 2 X 2 X 3/16		ALUM. 6061-T6	1'-10"	3.67'	0.85	3

THIS SHEET WEIGHT = 214 LBS

FIELD BOLTS:

(28) 3/8"ø-16 NC 18-8 SS. BOLTS X 1 1/4" W/ HN & LW (FLANGE)

(10) 1/2"ø- CONCRETE ANCHORS 18-8 SS. X 5" HEX HEAD (MK100227-01-1, MK100227-01-10 TO WALL)

RELEASE FOR
FABRICATION
MARCH 9, 2016
Yanke Machine Shop, Inc.
W.O. #100227

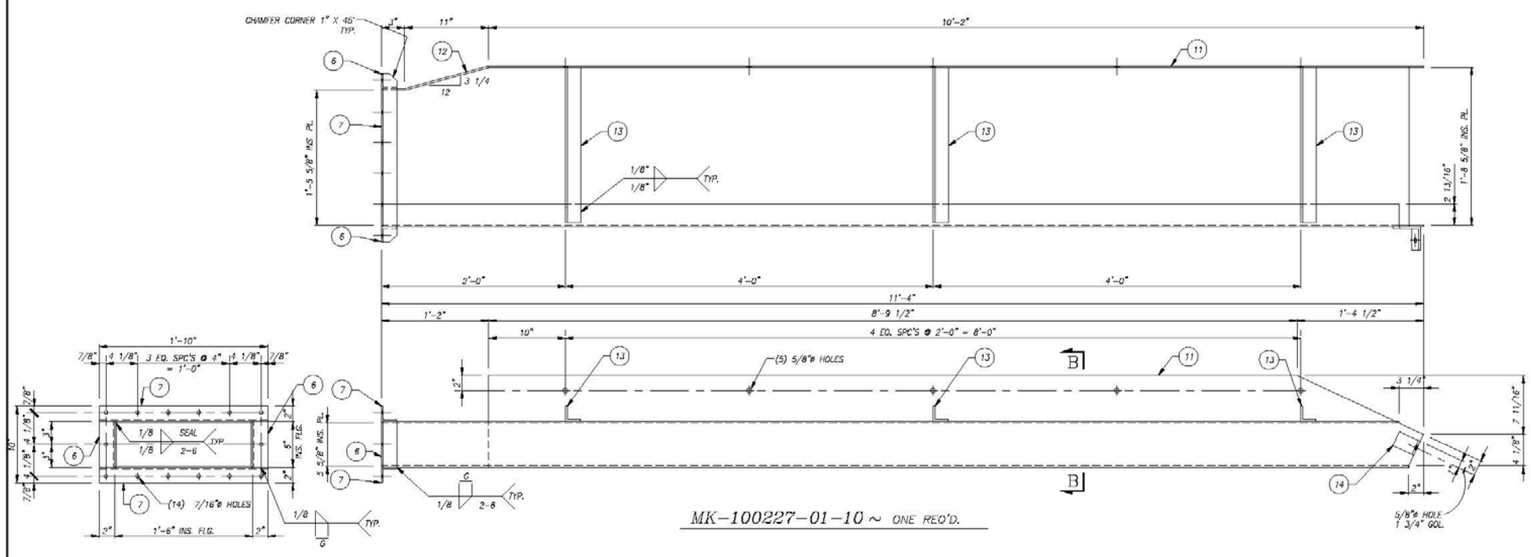

MK-100227-01-10 ~ ONE REQ'D.

NOTES:

1.- ALL CORNER WELDS (FILLET OR BEVEL) SHALL BE 1/8" MIN U.N.O.

2.- ALL HOLES 7/16"ø U.N.O.

3.- INSIDE OF FLUME SHALL BE SMOOTH. ALL BURRS, SHARP EDGES AND CORNERS SHALL BE GROUND OFF.

4.- WORK THIS SHEET WITH DWG 100227-02

NO.	REVISION	BY	DATE
△			
△			
△			
△			
△			

YANKE MACHINE SHOP, INC.
4414 SO. GEKELER LANE ~ P.O. BOX 5405 ~ PHONE (208) 342-8901
BOISE, IDAHO 83716 BOISE, IDAHO 83705 FAX (208) 338-2233
WWW.YANKEMACHINE.COM E-MAIL YMS@YANKEMACHINE.COM

CUSTOMER: U.S. FISH & WILDLIFE SERVICE

ITEM	BY	DATE
DRAWN	D.T.	2/17/16
CHECKED		
APPROVED		

WARM SPRINGS NATIONAL FISH HATCHERY
LAMPREY PASSAGE SYSTEM
FABRICATION DETAILS

SCALE 1 1/2"=1'-0"
DRAWING NO. 100227-01
REVISION 0

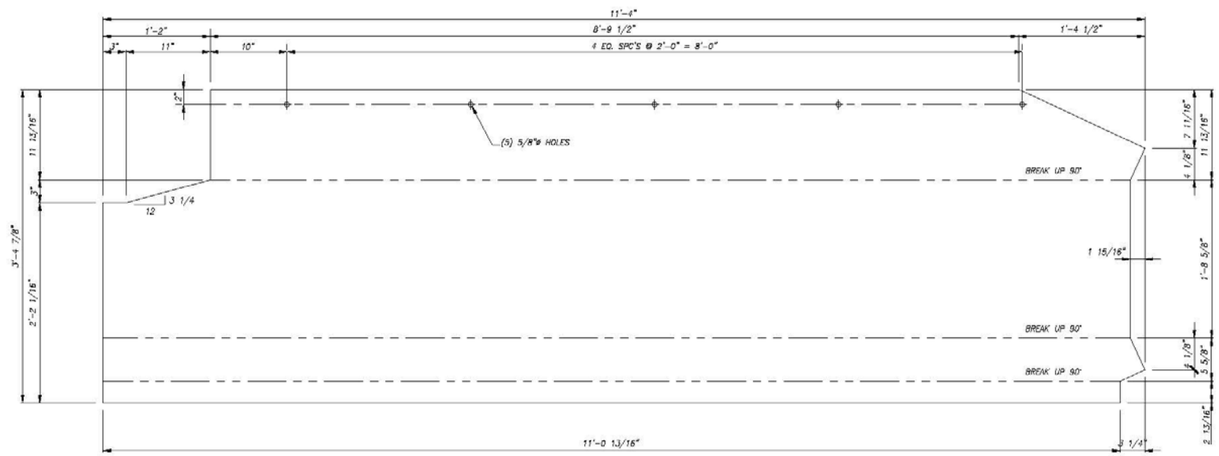

DETAIL ITEM (11) ONE REQ'D

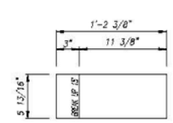

DETAIL ITEM (12) ONE REQ'D

RELEASE FOR
FABRICATION
MARCH 9, 2016
Yanke Machine Shop, Inc.
W.O. #100227

NOTES:

1.- ALL HOLES 5/8"ø U.N.O.

2.- WORK THIS SHEET WITH DWG 100227-01

NO.	REVISION	BY	DATE
△			
△			
△			
△			
△			

YANKE MACHINE SHOP, INC.
4414 SO. GEKELER LANE ~ BOISE, IDAHO 83716
P.O. BOX 5405 ~ BOISE, IDAHO 83705
PHONE (208) 342-8901 ~ FAX (208) 338-2233
WWW.YANKEMACHINE.COM ~ E-MAIL YMS@YANKEMACHINE.COM

CUSTOMER: U.S. FISH & WILDLIFE SERVICE

ITEM	BY	DATE
DRAWN	D.T.	2/17/16
CHECKED		
APPROVED		

WARM SPRINGS NATIONAL FISH HATCHERY
LAMPREY PASSAGE SYSTEM
PLATE DETAILS

SCALE: 1 1/2"=1'-0"
DRAWING NO. 100227-02
REVISION 0

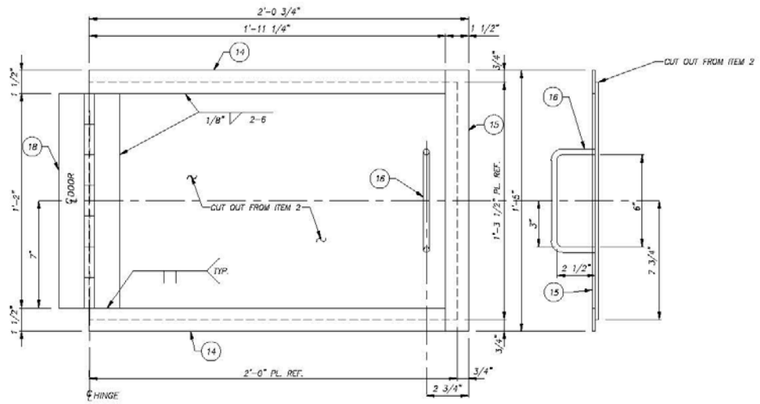

DOOR DETAIL ~ ONE REQ'D.
3"=1'-0"

RELEASE FOR
FABRICATION
MARCH 9, 2016
Yanke Machine Shop, Inc.
W.O. #100227

ITEM	NO. REQ'D	DESCRIPTION	LENGTH	TOTAL QUANT.	UNIT WT.	TOTAL WT.
	1	MK-70J/09-03-1 ~ REST BOX				140
2	1	PL. 3/16 X 1'-5 5/8" (BEND) ALUM. 5052-H32	3'-7 11/16"	5.35	2.66	14
3	1	PL. 3/16 X 1'-5 5/8" (BEND) ALUM. 5052-H32	7'-0 3/8"	10.33	2.66	27
4	1	PL. 3/16 X 10" ALUM. 5052-H32	1'-10"	1.53	2.66	4
5	1	PL. 3/16 X 1'-1 3/16" (BEND) ALUM. 5052-H32	1'-5 5/8"	2.01	2.66	4
6	1	PL. 3/16 X 1'-0" (BEND) ALUM. 5052-H32	2'-4 7/8"	2.41	2.66	6
7	1	PL. 3/16 X 2'-10 7/8" ALUM. 5052-H32	3'-7 1/16"	10.43	2.66	28
8	1	PL. 3/16 X 2'-10 7/8" ALUM. 5052-H32	3'-7 1/16"	10.43	2.66	28
9	1	L 4 X 3 X 1/4 (MITERED) ALUM. 6061-T6	2'-11"	2.92'	1.99	6
10	1	L 4 X 3 X 1/4 (MITERED) ALUM. 6061-T6	1'-11 13/16"	1.99'	1.99	4
11	1	L 4 X 3 X 1/4 ALUM. 6061-T6	1'-2 1/2"	1.21'	1.99	2
12	6	L 2 X 2 X 3/16 ALUM. 6061-T6	0'-6"	3.0'	0.85	3
13	8	L 2 X 2 X 3/16 ALUM. 6061-T6	1'-10"	11.0'	0.85	9
14	2	FB 1 1/2 X 3/16 ALUM. 6061-T6	1'-11 1/4"	3.88'	0.33	1
15	1	FB 1 1/2 X 3/16 ALUM. 6061-T6	1'-5"	1.42'	0.33	1
16	1	RB 3/8 ø ALUM. 6061-T6	0'-11"	0.92'	0.13	1
17	1	4"ø SCH. 40 PIPE ALUM. 6061-T6	0'-5 3/4"	0.48'	3.73	2
18	1	PIANO HINGE 5052 ALUMINUM .120 X 4" – 3/8"ø PIN X 1'-2" LG McMASTER-CARR 1581A172				–
19	1	4"ø 125# S.O.F.F. FLANGE 356 ALUMINUM			–	–
20	14	3/8"ø– 16 NC 18-8 SS. BOLT X 1 1/4" W/ HN & LW			–	–

FIELD BOLTS:

(14) 3/8"ø–16 NC 18-8 SS. BOLTS X 1 1/4" W/ HN & LW (FLANGE)
(7) 1/2"ø– CONCRETE ANCHORS 18-8 SS. X 5" HEX HEAD (MK100227-03-1 TO WALL)

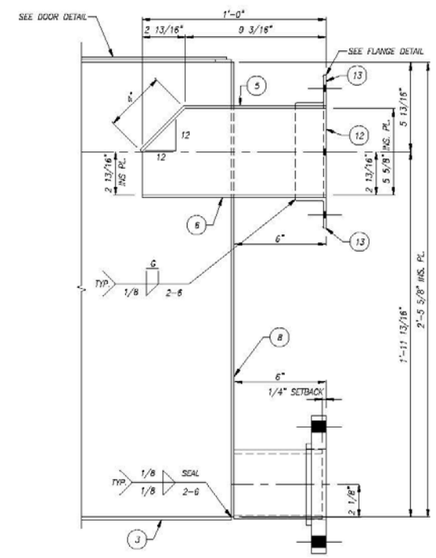

SECTION A-A
3"=1'-0"

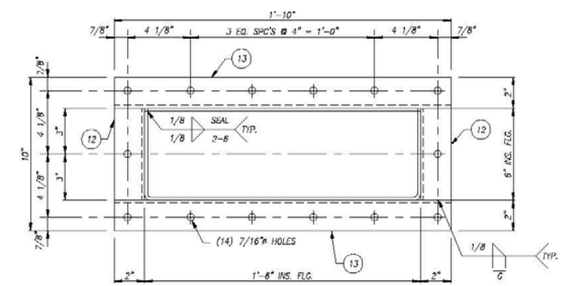

FLANGE DETAIL ~ THREE REQ'D.
3"=1'-0"

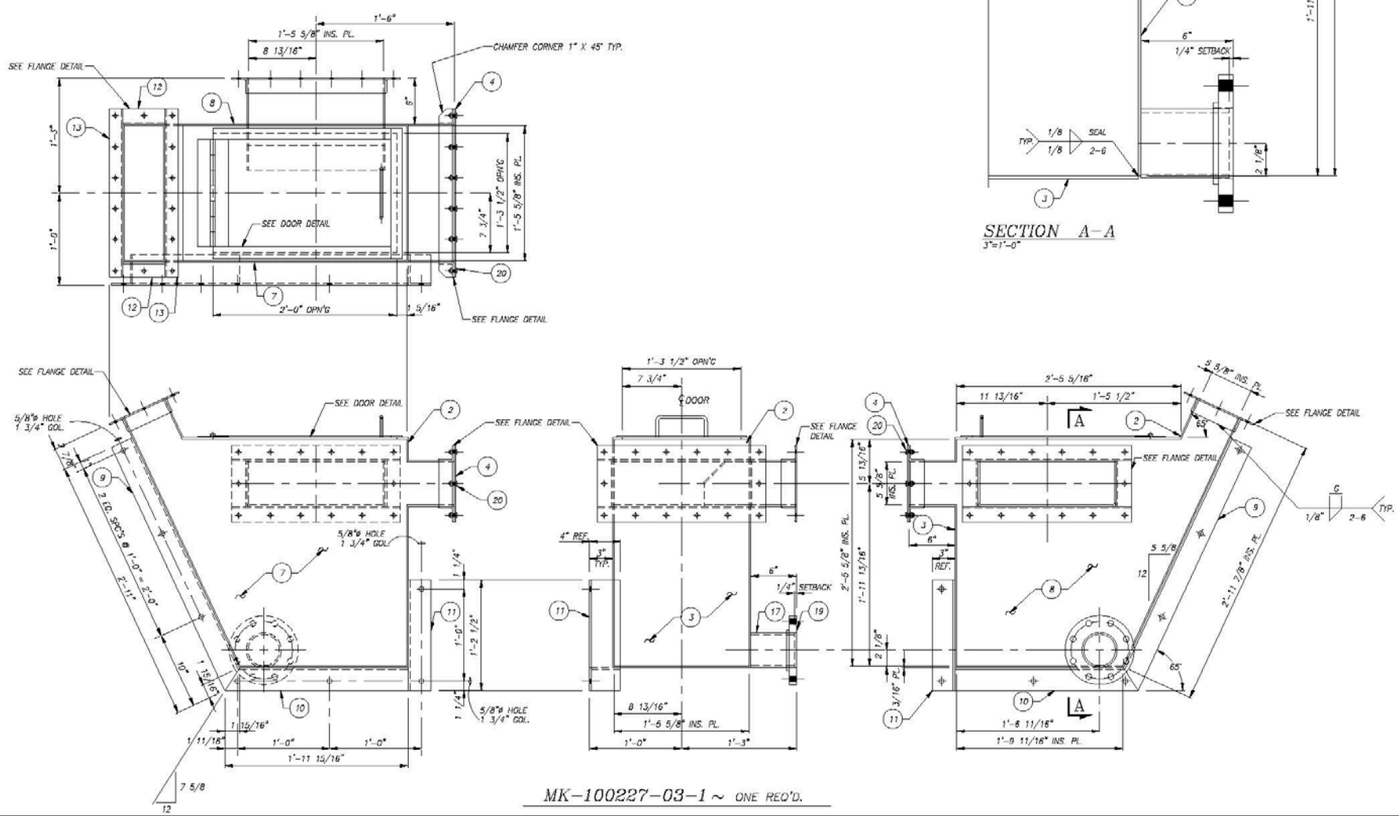

MK-100227-03-1 ~ ONE REQ'D.

NOTES:

1.– ALL CORNER WELDS (FILLET OR BEVEL) SHALL BE 1/8" MIN U.N.O.
2.– ALL HOLES 7/16"ø U.N.O.
3.– INSIDE OF FLUME SHALL BE SMOOTH. ALL BURRS, SHARP EDGES AND CORNERS SHALL BE GROUND OFF.
4.– WORK THIS SHEET WITH DWG 100227-04

NO.	REVISION	BY	DATE
△			
△			
△			
△			
△			

YANKE MACHINE SHOP, INC.
4414 SO. GEKELER LANE ~ P.O. BOX 5405 ~ PHONE (208) 342-8901
BOISE, IDAHO 83716 BOISE, IDAHO 83705 FAX (208) 338-2233
WWW.YANKEMACHINE.COM – E-MAIL YMS@YANKEMACHINE.COM

CUSTOMER: U.S. FISH & WILDLIFE SERVICE

ITEM	BY	DATE
DRAWN	D.T.	2/17/16
CHECKED		
APPROVED		

WARM SPRINGS NATIONAL FISH HATCHERY
LAMPREY PASSAGE SYSTEM
FABRICATION DETAILS

SCALE: 1 1/2"=1'-0"
DRAWING NO. 100227-03
REVISION 0

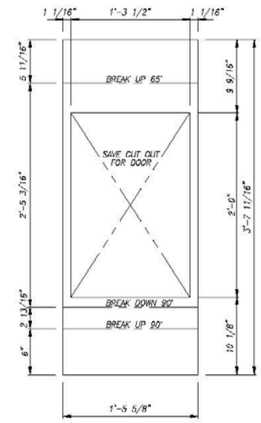

DETAIL ITEM (2) ONE REQ'D

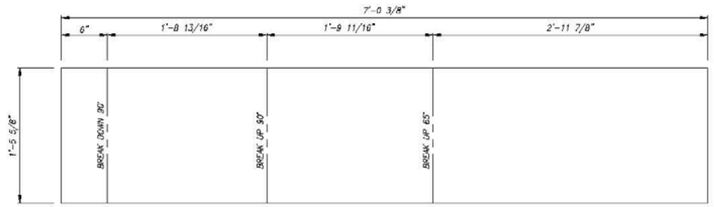

DETAIL ITEM (3) ONE REQ'D

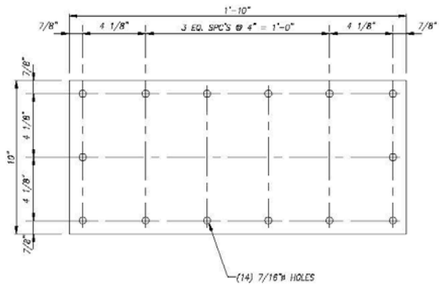

DETAIL ITEM (4) ONE REQ'D

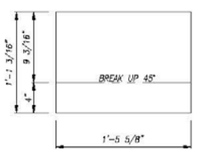

DETAIL ITEM (5) ONE REQ'D

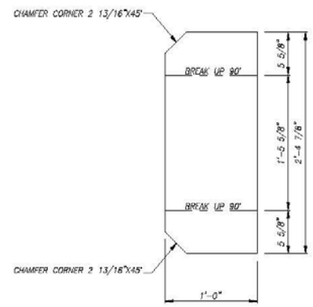

DETAIL ITEM (6) ONE REQ'D

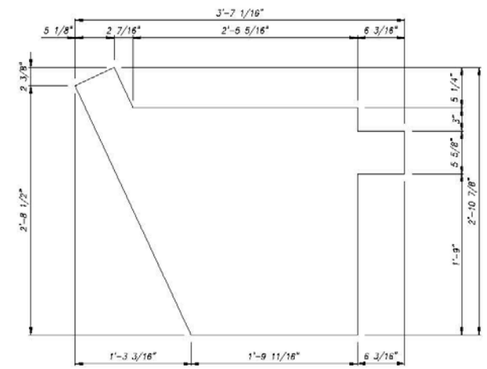

DETAIL ITEM (7) ONE REQ'D

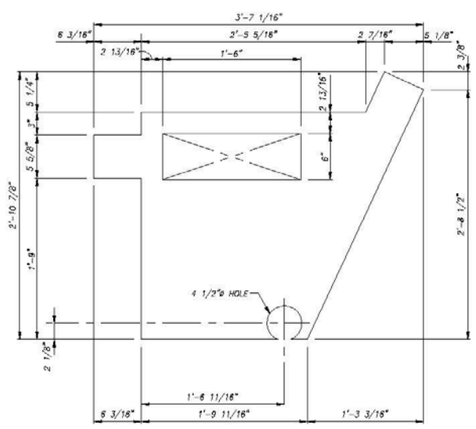

DETAIL ITEM (8) ONE REQ'D

RELEASE FOR
FABRICATION
MARCH 9, 2016
Yanke Machine Shop, Inc.
W.O. #100227

NOTES:
1.– ALL HOLES 7/16"ø U.N.O.
2.– WORK THIS SHEET WITH DWG 100227-03

NO.	REVISION	BY	DATE
△			
△			
△			
△			
△			

YANKE MACHINE SHOP, INC.
4414 SO. GEKELER LANE ~ BOISE, IDAHO 83716 — P.O. BOX 5405 ~ BOISE, IDAHO 83705 — PHONE (208) 342-8901 FAX (208) 338-2233
WWW.YANKEMACHINE.COM – E-MAIL YMS@YANKEMACHINE.COM

CUSTOMER: U.S. FISH & WILDLIFE SERVICE

ITEM	BY	DATE
DRAWN	D.T.	2/17/16
CHECKED		
APPROVED		

WARM SPRINGS NATIONAL FISH HATCHERY
LAMPREY PASSAGE SYSTEM
PLATE DETAILS

SCALE: 1 1/2"=1'-0"
DRAWING NO. 100227-04
REVISION 0

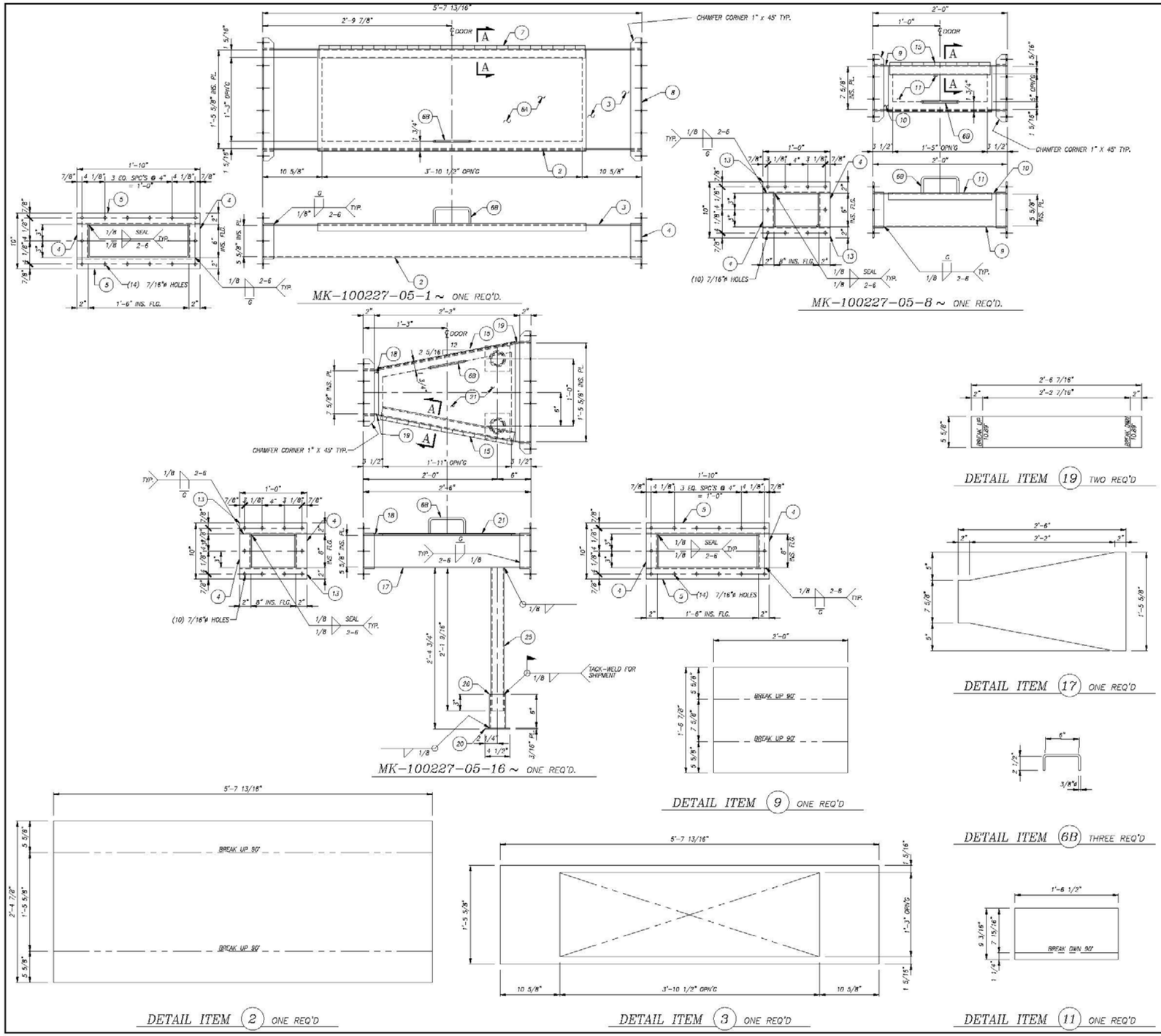

ITEM	NO. REQ'D	DESCRIPTION	LENGTH	TOTAL QUANT.	UNIT WT.	TOTAL WT.
	1	MK-100227-05-1~ FLUME				78
2	1	PL. 3/16 X 2'-4 7/8" ALUM. 5052-H32	5'-7 13/16"	13.60	2.66	36
3	1	PL. 3/16 X 1'-5 5/8" ALUM. 5052-H32	5'-7 13/16"	8.30	2.66	22
4	4	L 2 X 2 X 3/16 ALUM. 6061-T6	0'-6"	2.0'	0.85	2
5	4	L 2 X 2 X 3/16 ALUM. 6061-T6	1'-10"	7.33'	0.85	6
6A	1	PL. 1/8 X 1'-7 3/16" (BEND) ALUM. 5052-H32	4'-0"	6.4	1.75	11
6B	1	RB 3/8 ø (BEND) ALUM. 6061-T6	0'-11"	0.92'	0.13	1
7	1	PIANO HINGE 5052 ALUMINUM .120 X 4" – 3/8"ø PIN X 3'-11 1/2" LG. McMASTER-CARR 1581A172				
	1	MK-100227-05-8~ FLUME				19
9	1	PL. 3/16 X 1'-6 7/8" (BEND) ALUM. 5052-H32	2'-0"	3.15	2.66	8
10	1	PL. 3/16 X 7 5/8" ALUM. 5052-H32	2'-0"	1.27	2.66	3
11	1	PL. 1/8 X 9 3/16" (BEND) ALUM. 5052-H32	1'-6 1/2"	1.18	1.75	2
4	4	L 2 X 2 X 3/16 ALUM. 6061-T6	0'-6"	2.0'	0.85	2
13	4	L 2 X 2 X 3/16 ALUM. 6061-T6	1'-0"	4.0'	0.85	3
6B	1	RB 3/8 ø (BEND) ALUM. 6061-T6	0'-11"	0.92'	0.13	1
15	1	PIANO HINGE 5052 ALUMINUM .120 X 4" – 3/8"ø PIN X 1'-6" LG. McMASTER-CARR-1581A172				
	1	MK-100227-05-16~ TRANSITION FLUME				45
17	1	PL. 3/16 X 1'-5 5/8" ALUM. 5052-H32	2'-6"	3.67	2.66	10
18	1	PL. 3/16 X 1'-5 5/8" ALUM. 5052-H32	2'-6"	3.67	2.66	10
19	2	PL. 3/16 X 5 5/8" ALUM. 5052-H32	2'-6 7/16"	2.38	2.66	6
20	2	PL. 3/16 X 4 1/2" ALUM. 5052-H32	0'-4 1/2"	0.38	2.66	1
21	1	PL. 1/8 X 1'-6 7/8" (BEND) ALUM. 5052-H32	2'-0 3/4"	3.24	1.75	6
4	4	L 2 X 2 X 3/16 ALUM. 6061-T6	0'-6"	2.0'	0.85	2
13	2	L 2 X 2 X 3/16 ALUM. 6061-T6	1'-0"	2.0'	0.85	2
5	2	L 2 X 2 X 3/16 ALUM. 6061-T6	1'-10"	3.67'	0.85	3
25	1	2 ø SCH. 40 PIPE ALUM. 6061-T6	2'-1 9/16"	2.13'	1.26	3
26	1	2 1/2 ø SCH. 40 PIPE ALUM. 6061-T6	0'-6"	0.5'	2.00	1
6B	1	RB 3/8 ø (BEND) ALUM. 6061-T6	0'-11"	0.92'	0.13	1
15	1	PIANO HINGE 5052 ALUMINUM .120 X 4" – 3/8"ø PIN X 2'-0" LG. McMASTER-CARR 1581A172				

THIS SHEET WEIGHT = 142 LBS

FIELD BOLTS:

(34) 3/8"ø-16 NC 18-8 SS. BOLTS X 1 1/4" W/ HN & LW (FLANGE)

RELEASE FOR FABRICATION
MARCH 9, 2016
Yanke Machine Shop, Inc.
W.O. # 100227

NOTES:

1.– ALL CORNER WELDS (FILLET OR BEVEL) SHALL BE 1/8" MIN U.N.O.
2.– ALL HOLES 7/16"ø U.N.O.
3.– INSIDE OF FLUME SHALL BE SMOOTH. ALL BURRS, SHARP EDGES AND CORNERS SHALL BE GROUND OFF.
4.– WORK THIS SHEET WITH DWG 100227-06

NO.	REVISION	BY	DATE
△			
△			
△			
△			
△			

YANKE MACHINE SHOP, INC.
4414 SO. GEKELER LANE ~ P.O. BOX 5405 ~ PHONE (208) 342-8901
BOISE, IDAHO 83716 BOISE, IDAHO 83705 FAX (208) 338-2233
WWW.YANKEMACHINE.COM E-MAIL YMS@YANKEMACHINE.COM

CUSTOMER: U.S. FISH & WILDLIFE SERVICE

ITEM	BY	DATE
DRAWN	D.T.	2/17/16
CHECKED		
APPROVED		

WARM SPRINGS NATIONAL FISH HATCHERY
LAMPREY PASSAGE SYSTEM
FABRICATION DETAILS

SCALE 1 1/2"=1'-0"
DRAWING NO. 100227-05
REVISION △0

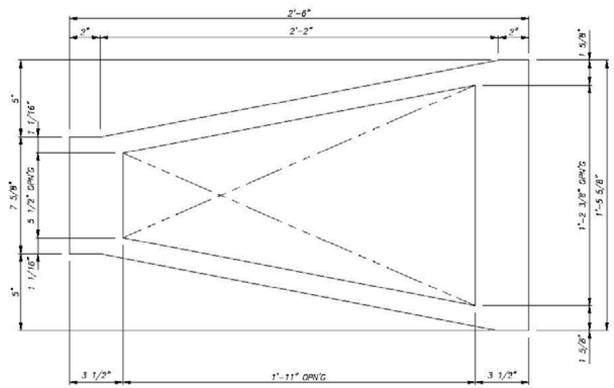

DETAIL ITEM 18 ONE REQ'D

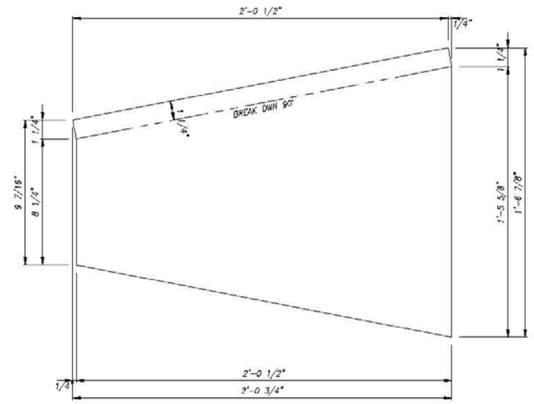

DETAIL ITEM 21 ONE REQ'D

RELEASE FOR
FABRICATION
MARCH 9, 2016
Yanke Machine Shop, Inc.
W.O. #100227

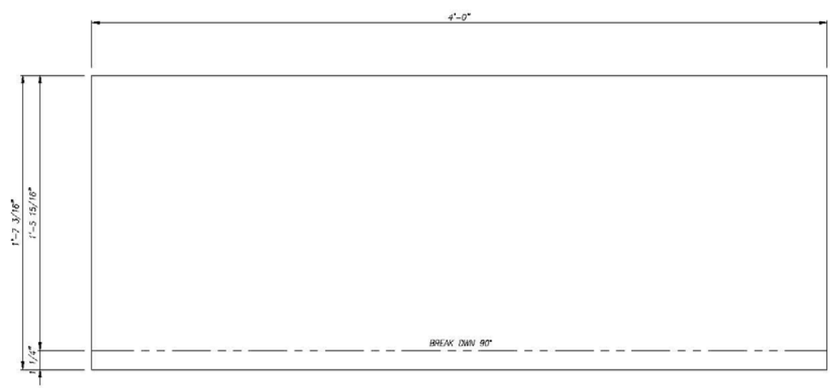

DETAIL ITEM 6 ONE REQ'D

NOTES:

1.– WORK THIS SHEET WITH DWG 100227-05

NO.	REVISION	BY	DATE
△			
△			
△			
△			
△			

YANKE MACHINE SHOP, INC.
4414 SO. GEKELER LANE ~ P.O. BOX 5405 ~ PHONE (208) 342-8901
BOISE, IDAHO 83716 BOISE, IDAHO 83705 FAX (208) 338-2233
WWW.YANKEMACHINE.COM – E-MAIL YMS@YANKEMACHINE.COM

CUSTOMER: U.S. FISH & WILDLIFE SERVICE

ITEM	BY	DATE
DRAWN	D.T.	2/17/16
CHECKED		
APPROVED		

WARM SPRINGS NATIONAL FISH HATCHERY
LAMPREY PASSAGE SYSTEM
PLATE DETAILS

SCALE 3"=1'-0"
DRAWING NO. 100227-06
REVISION 0

ITEM	NO. REQ'D	DESCRIPTION		LENGTH	TOTAL QUANT.	UNIT WT.	TOTAL WT.
	1	MK-100227-07-1~ ELBOW 90°					63
2	2	PL. 3/16 X 2'-7 5/8"	ALUM. 5052-H32	3'-5 5/16"	18.15	2.66	48
3	1	PL. 3/16 X 5 5/8"	ALUM. 5052-H32	5'-0 3/8"	7.39	2.66	6
4	1	PL. 3/16 X 5 5/8"	ALUM. 5052-H32	2'-8 3/8"	3.98	2.66	3
5	4	L 2 X 2 X 3/16	ALUM. 6061-T6	0'-6"	2.0'	0.85	2
6	4	L 2 X 2 X 3/16	ALUM. 6061-T6	1'-10"	7.33'	0.85	6
	2	MK-100227-07-8~ ELBOW 65°				33	66
8	4	PL. 3/16 X 9 3/16"	ALUM. 5052-H32	2'-2 5/8"	6.79	2.66	18
10	2	PL. 3/16 X 1'-5 5/8"	ALUM. 5052-H32	2'-4 3/8"	7.0	2.66	19
11	2	PL. 3/16 X 1'-5 5/8"	ALUM. 5052-H32	1'-10 1/16"	5.4	2.66	14
5	8	L 2 X 2 X 3/16	ALUM. 6061-T6	0'-6"	4.0'	0.85	3
6	8	L 2 X 2 X 3/16	ALUM. 6061-T6	1'-10"	14.67'	0.85	12

THIS SHEET WEIGHT = 129 LBS

RELEASE FOR
FABRICATION
MARCH 9, 2016
Yanke Machine Shop, Inc.
W.O. #100227

FIELD BOLTS:
(43) 3/8"ø-16 NC 18-8 SS. BOLTS X 1 1/4" W/ HN & LW (FLANGE)

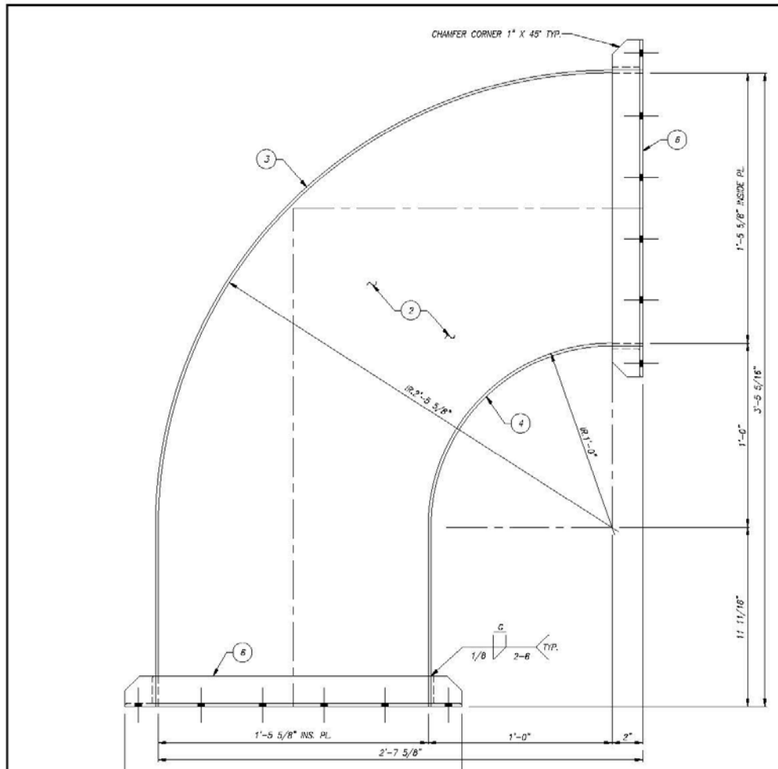

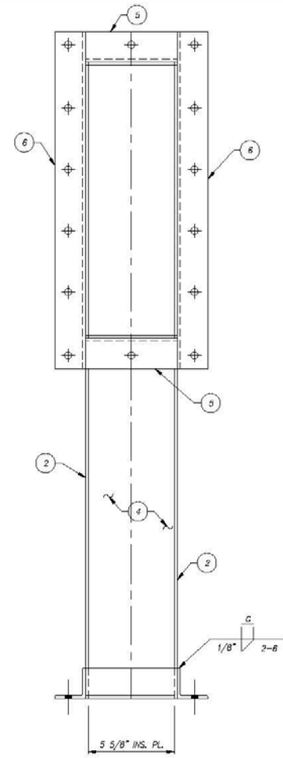

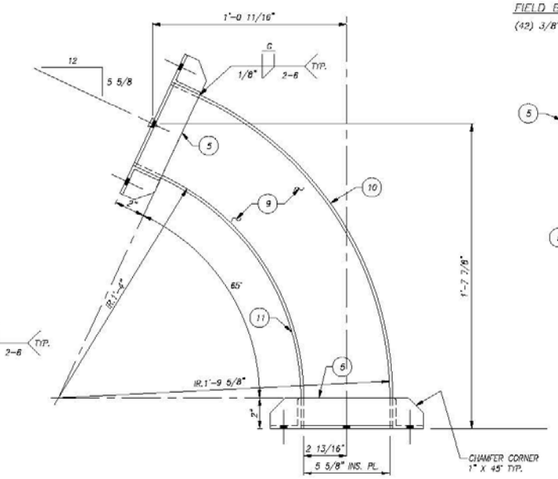

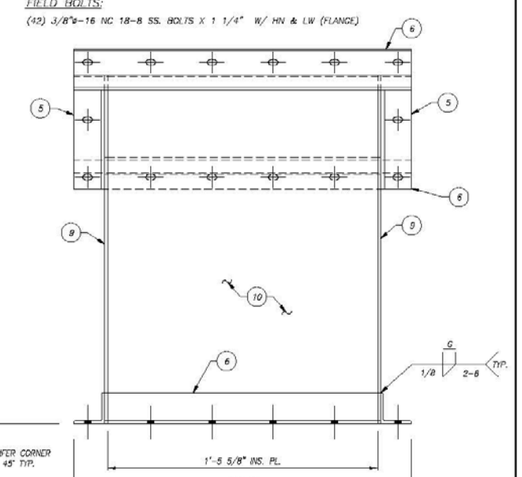

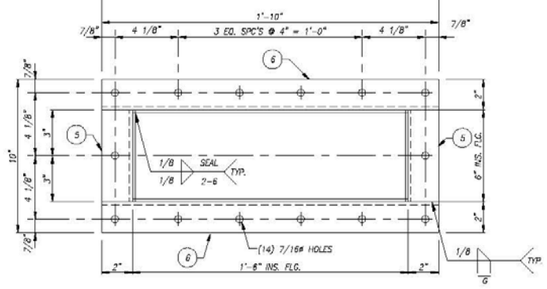

MK-100227-07-1 ~ ONE REQ'D.

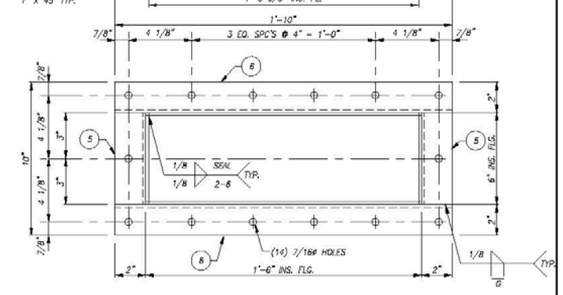

MK-100227-07-8 ~ TWO REQ'D.

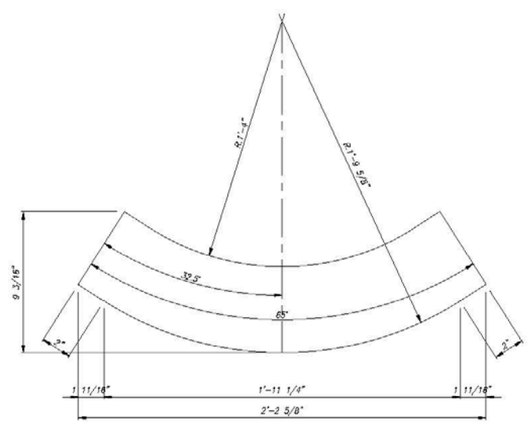

DETAIL ITEM 9 FOUR REQ'D

NOTES:
1.- ALL CORNER WELDS (FILLET OR BEVEL) SHALL BE 1/8" MIN WELD U.N.O.
2.- ALL HOLES 7/16"ø U.N.O.
3.- INSIDE OF FLUME SHALL BE SMOOTH. ALL BURRS, SHARP EDGES AND CORNERS SHALL BE GROUND OFF.

NO.	REVISION	BY	DATE
△			
△			
△			
△			
△			

YANKE MACHINE SHOP, INC.
4414 SO. GEKELER LANE ~ P.O. BOX 5405 ~ PHONE (208) 342-8901
BOISE, IDAHO 83716 BOISE, IDAHO 83705 FAX (208) 338-2233
WWW.YANKEMACHINE.COM ~ E-MAIL YMS@YANKEMACHINE.COM

CUSTOMER: U.S. FISH & WILDLIFE SERVICE

ITEM	BY	DATE
DRAWN	D.T.	2/17/16
CHECKED		
APPROVED		

WARM SPRINGS NATIONAL FISH HATCHERY
LAMPREY PASSAGE SYSTEM
FABRICATION DETAILS

SCALE 3"=1'-0"
DRAWING NO. 100227-07
REVISION 0

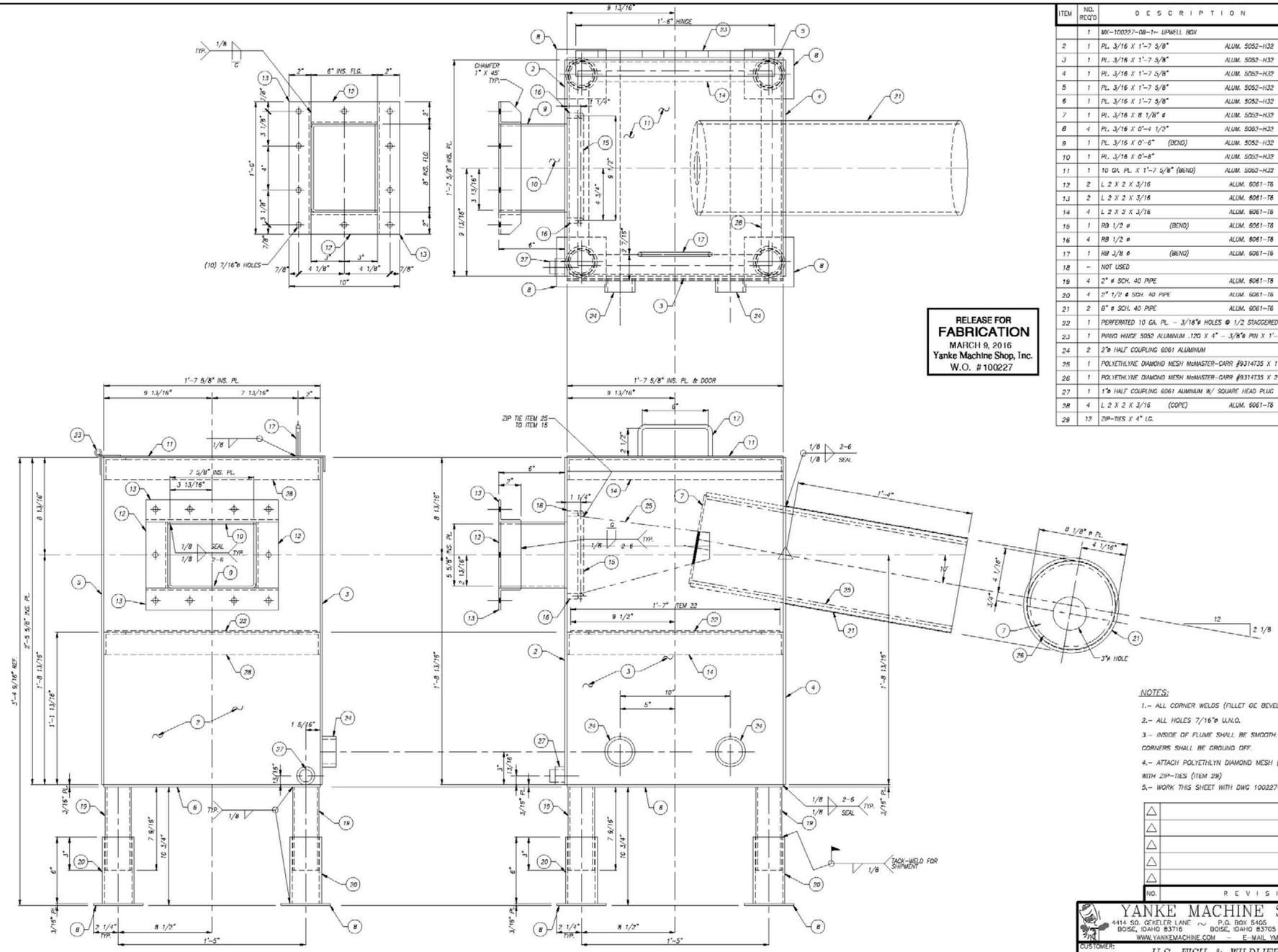

ITEM	NO. REQ'D	DESCRIPTION	LENGTH	TOTAL QUANT.	UNIT WT.	TOTAL WT.
	1	MK-100227-08-1~ UPWELL BOX				105
2	1	PL. 3/16 X 1'-7 5/8" ALUM. 5052-H32	2'-5 5/8"	4.04	2.66	11
3	1	PL. 3/16 X 1'-7 5/8" ALUM. 5052-H32	2'-5 5/8"	4.04	2.66	11
4	1	PL. 3/16 X 1'-7 5/8" ALUM. 5052-H32	2'-5 5/8"	4.04	2.66	11
5	1	PL. 3/16 X 1'-7 5/8" ALUM. 5052-H32	2'-5 5/8"	4.04	2.66	11
6	1	PL. 3/16 X 1'-7 5/8" ALUM. 5052-H32	1'-7 5/8"	2.67	2.66	7
7	1	PL. 3/16 X 8 1/8" ø ALUM. 5052-H32	0'-8 1/8"	0.46	2.66	1
8	4	PL. 3/16 X 0'-4 1/2" ALUM. 5052-H32	0'-4 1/2"	0.56	2.66	1
9	1	PL. 3/16 X 0'-6" (BEND) ALUM. 5052-H32	1'-8 7/8"	0.79	2.66	2
10	1	PL. 3/16 X 0'-6" ALUM. 5052-H32	0'-7 3/8"	0.02	2.66	1
11	1	10 GA. PL. X 1'-7 5/8" (BEND) ALUM. 5052-H32	1'-9 3/16"	2.89	1.75	5
12	2	L 2 X 2 X 3/16 ALUM. 6061-T6	0'-6"	1.0'	0.85	1
13	2	L 2 X 2 X 3/16 ALUM. 6061-T6	1'-0"	2.0'	0.85	2
14	4	L 2 X 2 X 3/16 ALUM. 6061-T6	1'-7 5/8"	6.54'	0.85	6
15	1	RB 1/2 ø (BEND) ALUM. 6061-T6	2'-8"	2.67'	0.23	1
16	4	RB 1/2 ø ALUM. 6061-T6	0'-1"	0.33'	0.23	1
17	1	RB 3/8 ø (BEND) ALUM. 6061-T6	0'-11"	0.92'	0.13	1
18	–	NOT USED	–	–	–	–
19	4	2" ø SCH. 40 PIPE ALUM. 6061-T6	0'-7 9/16"	2.52'	1.26	3
20	4	2" 1/2 ø SCH. 40 PIPE ALUM. 6061-T6	0'-6"	2.0'	2.00	4
21	2	8" ø SCH. 40 PIPE ALUM. 6061-T6	2'-0"	2.0'	9.88	20
22	1	PERFERATED 10 GA. PL. – 3/16"ø HOLES @ 1/2 STAGGERED CENTERS 6061 ALUMINUM 1'-7" X 1'-7"				
23	1	PIANO HINGE 5052 ALUMINUM .120 X 4" – 3/8"ø PIN X 1'-6" LG. McMASTER-CARR 1581A172				–
24	2	2"ø HALF COUPLING 6061 ALUMINUM			–	–
25	1	POLYETHLYNE DIAMOND MESH McMASTER-CARR #9314T35 X 1'-1 3/8" X 2'-2 5/8"				
26	1	POLYETHLYNE DIAMOND MESH McMASTER-CARR #9314T35 X 2'-0" X 2'-1"				
27	1	1"ø HALF COUPLING 6061 ALUMINUM W/ SQUARE HEAD PLUG				
28	4	L 2 X 2 X 3/16 (COPE) ALUM. 6061-T6	1'-7 1/4"	6.42'	0.85	5
29	12	ZIP-TIES X 4" LG.				

NOTES:

1.– ALL CORNER WELDS (FILLET OR BEVEL) SHALL BE 1/8" MIN U.N.O.

2.– ALL HOLES 7/16"ø U.N.O.

3.– INSIDE OF FLUME SHALL BE SMOOTH. ALL BURRS, SHARP EDGES AND CORNERS SHALL BE GROUND OFF.

4.– ATTACH POLYETHLYN DIAMOND MESH (ITEM 25) TO ROUND BAR (ITEM 15) WITH ZIP-TIES (ITEM 29)

5.– WORK THIS SHEET WITH DWG 100227-09

NO.	REVISION	BY	DATE
△			
△			
△			
△			
△			

YANKE MACHINE SHOP, INC.
4414 SO. GEKELER LANE ~ BOISE, IDAHO 83716
P.O. BOX 5405 ~ BOISE, IDAHO 83705
PHONE (208) 342-8901 FAX (208) 338-2233
WWW.YANKEMACHINE.COM – E-MAIL YMS@YANKEMACHINE.COM

CUSTOMER: U.S. FISH & WILDLIFE SERVICE

ITEM	BY	DATE
DRAWN	D.T.	2/17/16
CHECKED		
APPROVED		

WARM SPRINGS NATIONAL FISH HATCHERY
LAMPREY PASSAGE SYSTEM
FABRICATION DETAILS

SCALE 3"=1'-0"
DRAWING NO. 100227-08
REVISION 0

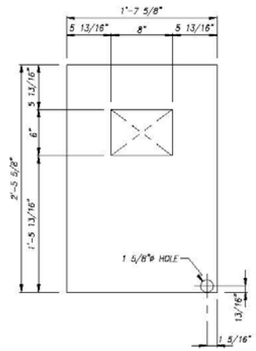

DETAIL ITEM (2) ONE REQ'D

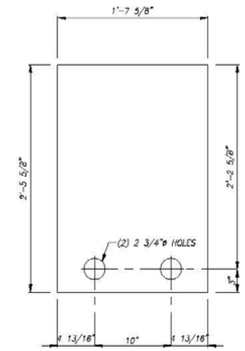

DETAIL ITEM (3) ONE REQ'D

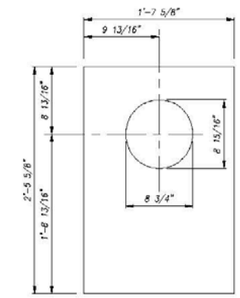

DETAIL ITEM (4) ONE REQ'D

RELEASE FOR
FABRICATION
MARCH 9, 2016
Yanke Machine Shop, Inc.
W.O. #100227

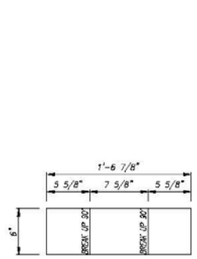

DETAIL ITEM (9) ONE REQ'D

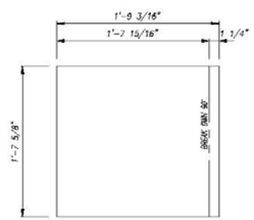

DETAIL ITEM (11) ONE REQ'D

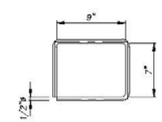

DETAIL ITEM (15) ONE REQ'D

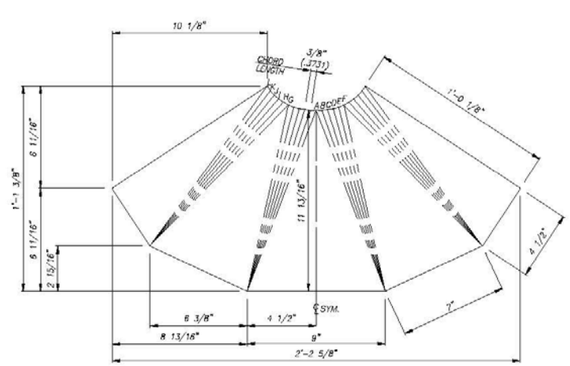

STA.	LENGTH
A	1'-0 5/8"
B	1'-0 1/2"
C	1'-0 7/16"
D	1'-0 3/8"
E	1'-0 3/8"
F	1'-0 7/16"
G	1'-0 7/8"
H	1'-0 13/16"
I	1'-0 3/4"
J	1'-0 3/4"
K	1'-0 13/16"
L	1'-0 15/16"

DETAIL ITEM (25) ONE REQ'D

NOTES:
1.- WORK THIS SHEET WITH DWG 100227-08

NO.	REVISION	BY	DATE
△			
△			
△			
△			
△			

YANKE MACHINE SHOP, INC.
4414 SO. GEKELER LANE BOISE, IDAHO 83716 ~ P.O. BOX 5405 BOISE, IDAHO 83705 ~ PHONE (208) 342-8901 FAX (208) 338-2233
WWW.YANKEMACHINE.COM – E-MAIL YMS@YANKEMACHINE.COM

CUSTOMER: U.S. FISH & WILDLIFE SERVICE

ITEM	BY	DATE
DRAWN	D.T.	2/17/16
CHECKED		
APPROVED		

WARM SPRINGS NATIONAL FISH HATCHERY
LAMPREY PASSAGE SYSTEM
ITEM DETAILS

SCALE 1 1/2"=1'-0"
DRAWING NO. 100227-09
REVISION 0

U.S. Fish and Wildlife Service
Columbia River Fish and Wildlife Conservation Office
1211 SE Cardinal Court, Suite 100
Vancouver, WA 98683

June 2018
www.fws.gov/columbiariver