Appendix G.

USFWS Desert Tortoise Exclusion Fence Protocol

DESERT TORTOISE EXCLUSION FENCE (2005)

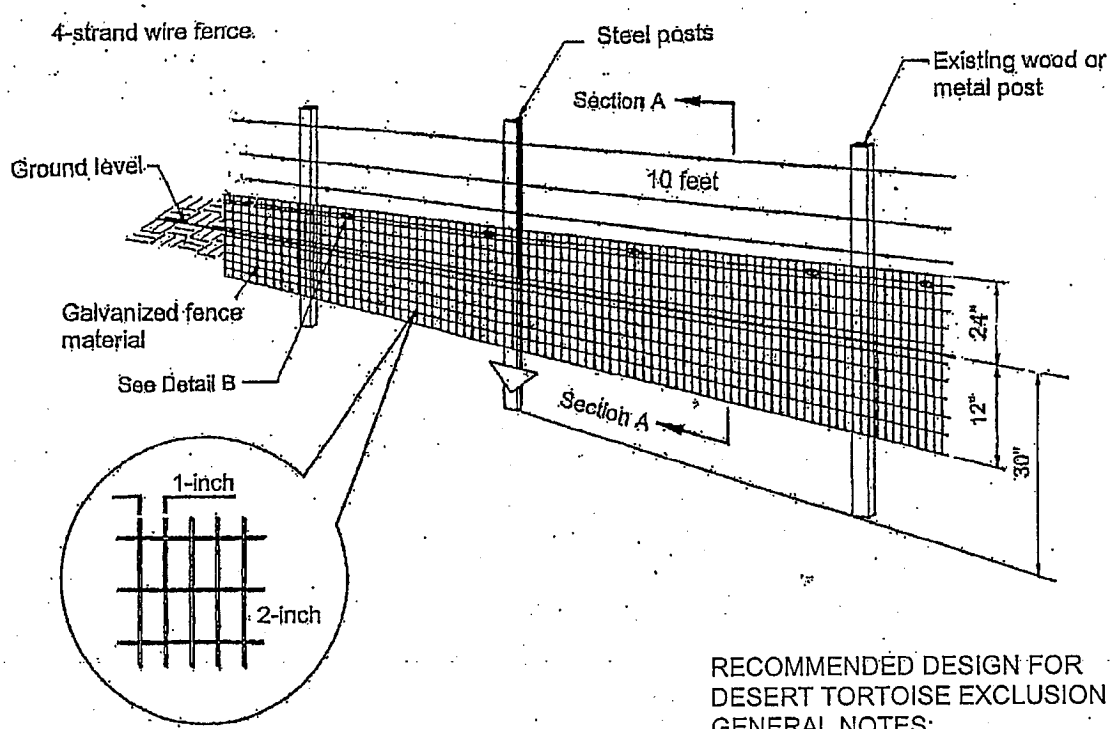

DETAIL A

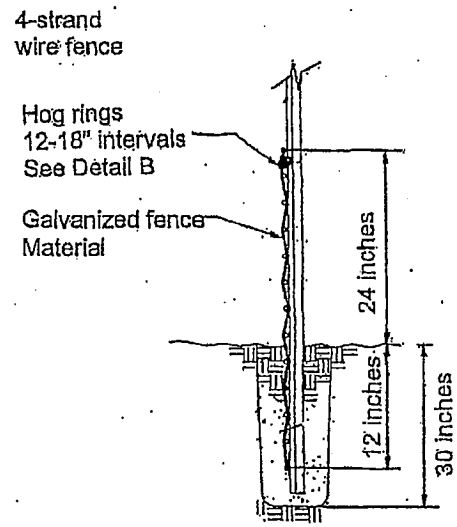

SECTION A

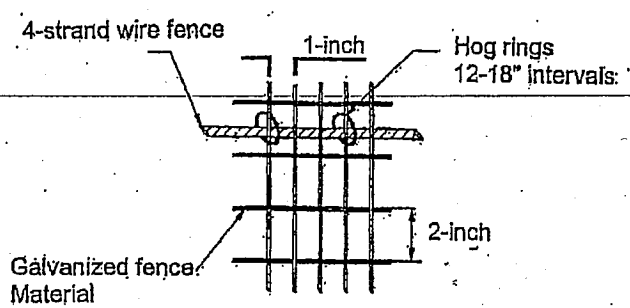

DETAIL B

RECOMMENDED DESIGN FOR
DESERT TORTOISE EXCLUSION FENCE
GENERAL NOTES:

1. Ensure that fence posts and materials conform to the standards approved by the U.S. Fish and Wildlife Service.
2. Ensure that the height above ground level is no less than 18 inches and no higher than 24 inches.
3. Ensure that the depth of fence material below ground level is about 12 inches but no less than 6 inches. (See SECTION A above)
4. Install additional steel posts when span between existing fence posts exceed 10 feet.
5. Attach fence material to existing fence or wire using hog rings at 12-inch intervals.
6. Fasten fence material to posts with 3 tie wires with a wire near the top, bottom, and center of the fence material.
7. Backfill trenches with excavated material and compact the material.
8. Attach fence material to all gates. Ensure that clearance at base of gate achieves zero ground clearance.
9. Substitute smooth wire for barbed wire if additional support wires are necessary.
10. The number and placement of support wires may be modified to allow sheep and deer to pass safely.
11. Erosion at the edge of the fence material where the fence crosses washes may occur and requires appropriate and timely monitoring and repair.
12. Tie the fence into existing culverts and cattleguards when determined necessary to allow desert tortoise passage underneath roadways.

FOR BEDROCK OR CALICHE SUBSTRATE
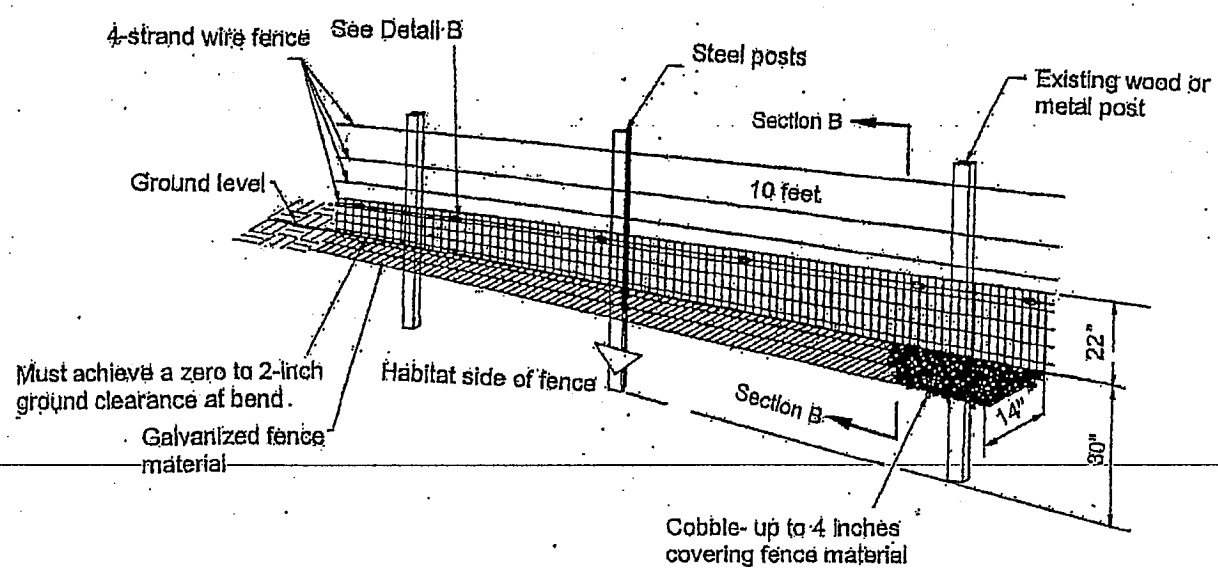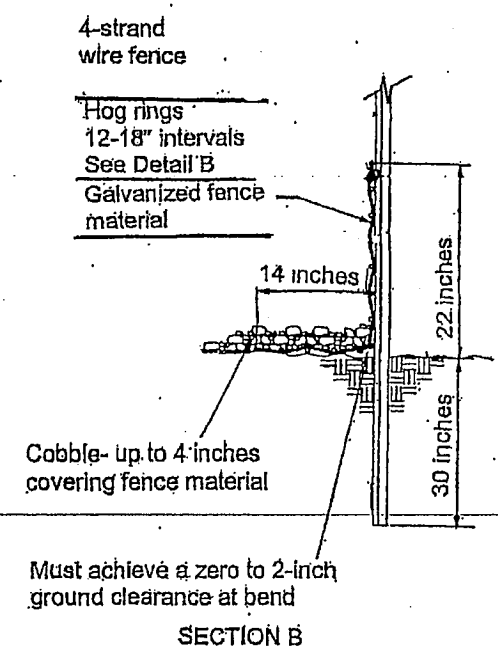
1. Use this fence design (see below) only for that portion of the fence where fence material cannot be placed 6 inches below existing ground level due to presence of bedrock, large rocks or caliche substrate.
2. Ensure that the fence height above ground level is no less than 22 inches.
3. Ensure that there is a zero to 2-inch ground clearance at the bend.
4. Ensure that the bent portion of the fence is lying on the ground and pointed in the direction of desert tortoise habitat.
5. Cover the portion of the fence that is flush with the ground with cobble (rocks placed on top of the fence material to a vertical thickness up to 4 inches).
6. When substrate no longer is composed of bedrock or caliche, install fence using design shown above.