U.S. Fish & Wildlife Service

Northeast Fishery Center
Lamar, Pennsylvania

Annual Report of Biological Activities 2006

Top: Hudson River Atlantic sturgeon
Left: Maine Atlantic salmon Right: Pennsylvania brook trout

The cover collage** exemplifies the Northeast Fishery Center's (NEFC) hands-on approach to our charge of leadership in managing and conserving aquatic resources in Region 5 - U.S. Fish & Wildlife Service. Once again, the challenging, fast pace continued seamlessly from the end of 2005 through Fiscal Year 2006. Now it is time to pause and do an instant replay of 2006 to evaluate and build on what we have discovered in preparation for a new year.

Center Director, Mike Millard and the Section Chiefs of NEFC's inter-related divisions: (1) John Fletcher - Fish Technology and (2) Meredith Bartron - Population Ecology and Genetics, effectively guided the workload in 2006 with all 14 staff members sacrificing home time to perform the numerous field projects undertaken. Whether introducing children to the world of fishes or participating in technical work groups which influenced fisheries policy on a national scale, we were able to find the appropriate human resources within to accomplish each task. In addition to our in-house skills, we also worked with a variety of international, federal, and state partners to accomplish the work described herein.

Even though we are enthusiastic about our experimental field projects and other technical work, we are also excited about the new construction initiated this year to expand our public outreach capabilities. Work has begun on rehabilitation and enhancement of our recreational fishing pond to make it safe and accessible for all. This will allow NEFC to provide a valuable fishing experience to those in the community while introducing them to the work we do in helping to manage the nation's fisheries. Along these lines we welcome Fishery Biologist, Steve Davis to our staff. Not only does Steve have much experience working with fish, but he also has interest in public outreach. Tom Bryerton has also stepped up to the plate as Head of Maintenance with one of the biggest challenges NEFC faces – keeping a 100+ acre facility functional with no other designated maintenance staff.

An active volunteer program at the Center provided unique learning opportunities for 12 students who contributed over 750 hours of much appreciated assistance in our mission.

Finally, we are appreciative of the support and cooperation we received from our State and Federal partners as well as the continued interest in our programs shown by Congressman John Peterson, PA 5th District. We are pleased to report the following Biological Activities for 2006:

STUDIES PERFORMED

Study Number and Title

LM-05-02 Evaluation of Atlantic salmon kelt broodstock diets *(continued study from 2005)*

LM-05-05 Assessment of watershed scale habitat features on the survival of juvenile Atlantic salmon. *(continued study from 2005)*

LM-05-06 Annual genetic characterization of Atlantic salmon broodstock at Craig Brook National Fish Hatchery (CBNFH) *(continued study from 2005)*

LM-05-07 2005 pedigree line for the Pleasant River broodstock at Craig Brook National Fish Hatchery *(continued study from 2005)*

** The Atlantic sturgeon pictured was captured in the Hudson R. in 2005. It is missing the left pelvic fin, an identifying mark indicating it was one of the Center's 4,900 fingerlings stocked by New York DEC in 1994.

STUDIES PERFORMED (cont.)
Study Number and Title

LM-05-08 Genetic characterization of an isolated population of Northern Plymouth Red-bellied Cooter (*Pseudemys rubriventris*) in Massachusetts *(continued study from 2005)*

LM-05-11 Genetics Assessment of Susquehanna River Shad *(finalized study from 2005)*

LM-06-01 Assessment of thermal habitat for Maine's DPS Atlantic salmon.

LM-06-02 Cryopreservation of Atlantic sturgeon sperm.

LM-06-03 Methanol and egg yolk as cryoprotectants for Atlantic salmon spermatozoa

LM-06-04 Hatchery-spawning of captive-wild Atlantic sturgeon

LM-06-05 Comparison of SE-MARK™ calcein stability between manufacturer's lots as it relates to marking efficacy in young-of-year Atlantic salmon

LM-06-06 Removal of calcein in wastewater resulting from immersion-marking of fish

LM-06-07 Movements of Adult Atlantic Sturgeon of the Hudson River

LM-06-08 Development of microsatellite loci for *VIllosa fabalis* (rayed bean mussel)

LM-06-09 Determination of origin Atlantic salmon captured during sturgeon sampling in the Penobscot River estuary

LM-06-10 Determination of origin for Atlantic salmon found in the Kennebec and Sandy River Drainage

LM-06-11 Population genetic structure of brown bullheads (*Ameiurus nebulosus*) in Presque Isle Bay and surrounding area of Lake Erie

LM-06-12 DNA analysis of unknown species eggs

LM-06-13 Use of Radiotelemetry to Assess Residency of Brown Bullheads in Presque Isle Bay, Lake Erie, Pennsylvania.

LM-06-14 Effluent management at hatcheries through nutrition

OTHER BIOLOGICAL INVESTIGATIONS AND RELATED ACTIVITIES PERFORMED

LM06A Long-term assessment of large woody debris addition to stream habitat and brook trout populations

LM06B Mussel Collection and Transport

OTHER BIOLOGICAL INVESTIGATIONS AND RELATED ACTIVITIES PERFORMED (cont.)

LM06C Evaluation of de-gassing equipment replacement at North Attleboro National Fish Hatchery

LM06D Partnership with the Pennsylvania Fish and Boat Commission for raising adult brook and rainbow trout

LM06E Coded Wire Tagging of Lake Trout

LM06F Genetic characterization and marking of Merrimack River Atlantic salmon

LM06G Genetic characterization of "wild" Penobscot River Atlantic salmon

LM06H Application of calcein as a dietary component for fish marking to enhance product evaluation and management capabilities.

LM06I Removal of phosphorus using pelletized acid mine drainage sludge

LM06J Partnership with the Pennsylvania Fish and Boat Commission for pond culture of juvenile walleye and striped bass

LM06K Design of American Shad (AMS) Culture System for Nashua NFH

LM06L Rehabilitation & design of Lamar Fish Technology Center serial reuse raceway system

LM06M Fish Health Inspection/Monitoring/Diagnostic Services

LM06N Participation in the National Wild Fish Health Survey

LM06O Incidence and Prevalence of Infectious Salmon Anemia virus (ISAv) in Sea Run Atlantic Salmon held at Service NFHs as Broodstock

LM06P Fish Health Extension Services

LM06Q U.S. Fish and Wildlife Service Title 50 Revision Committee

LM65R Vaccination of pre-release Connecticut River smolts using multi-valent vaccine

STUDIES / PUBLICATIONS IN WHICH THE CENTER COOPERATED:

Fay, C. **M. Bartron**, S. Craig, A. Hecht, J. Pruden, R. Saunders, T. Sheehan, and J. Trial. 2006. Status Review for Anadromous Atlantic Salmon (*Salmo salar*) in the United States. Report to the National Marine Fisheries Service and U.S. Fish and Wildlife Service. 294 pages.

Bean, D., W. Mahaney, **M. Bartron**, G. Mackey, and S. Horn-Olsen. 2006. A Report to TAC on Aquaculture Escapees, 2005. Report to Maine Atlantic Salmon Technical Advisory Committee.

STUDIES / PUBLICATIONS IN WHICH THE CENTER COOPERATED: (cont.)

Honeyfield, Dale C., Christian S. Ostrowski, **J.W. Fletcher, J.W. Mohler**. 2006. Dietary calcein marking of brook trout, Atlantic salmon, yellow perch, and coho salmon scales. North American Journal of Fishery Management 26:431-437.

McDaniel, Nichole K., Shozo H. Sugiura, **T. Kehler, J.W. Fletcher**, Relicardo M. Coloso, Peddrick Weis and Ronaldo P. Ferraris. 2005. Dissolved oxygen and dietary phosphorus modulate utilization and effluent partitioning of phosphorus in rainbow trout (*Oncorhyncus mykiss*) aquaculture. Environmental Pollution, Volume 138: 350 -357.

Sibrell, Phil, **T. Kehler, J.W. Fletcher**. 2006. Phosphorus removal from aquacultural effluents with iron-based precipitates produced by the neutralization of acid mine drainage. Sixth International Conference on Recirculating Aquaculture, Roanoke, VA.. July 21 -23, 2006.

Smith, D. R, **M.J. Millard**, and J. Grazio. Study in progress. Use of Radiotelemetry to Assess Residency of Brown Bullheads in Presque Isle Bay, Lake Erie, Pennsylvania.

Smith, D. R. and **M.J Millard.** Report in progress. Bay-wide tagging study to assess spawning migration and population size of horseshoe crabs in Delaware Bay. A USGS-Science Support Project (SSP). Michael Millard project officer.

Smith, D. R., **M.J. Millard**, and S. Eyler. 2006. Abundance of adult horseshoe crabs (Limulus polyphemus) in Delaware Bay estimated from a bay-wide mark-recapture study. Fishery Bulletin 104(3):456-464.

Underwood,T., J.Gordon, **M. Millard**, B. Lubinski, and S. Klosiewski. In press. Appropriateness of the Darroch estimator for monitoring adult chum salmon on the middle Yukon River, Alaska. North American Journal of Fisheries Managment.

STAFF PUBLICATIONS:

AFS-FHS (American Fisheries Society-Fish Health Section). 2005. Model Quality Assurance/Quality Control Program For Fish Health Laboratories, 2005 edition. AFSFHS, Bethesda, Maryland. (Edited by P. A. Barbash)

Glenney, G. and Lora Petrie-Hanson 2006. Fate of fluorescent microspheres in developing *Ictalurus punctatus* following prolonged immersion. Fish and Shellfish Immunology. 20:758-768.

Glenney, G. and Lora Petrie-Hanson 2006. Fate of intraperitoneally injected fluorescent microspheres in developing *Ictalurus punctatus*. Fish and Shellfish Immunology. 21:32-41.

Jodun, Wade, Kim King, Pat Farrell, and William Wayman. 2006. Methanol and egg yolk as a cryoprotectant for Atlantic salmon spermatozoa. Article Accepted. North American Journal of Aquaculture 68: 000 -000

Sweka, J.A. and K.J. Hartman. 2006. Effects of Large Woody Debris Addition on Stream Habitat and Brook Trout Populations. Hydrobiologia 559:363-378.

STAFF PUBLICATIONS (continued):

Sweka, J. A. , C. M. Legault, K. F. Beland, J. Trial, and M. J. Millard. *In Press*. Evaluation of removal sampling for basin-wide assessment of Atlantic salmon. North American Journal of Fisheries Management. 00:00-00.

Sweka, J. A., J. Mohler, M. J. Millard, T. Kehler, A. Kahnle, K. Hattala, G. Kenney, A. Higgs. *In Review*. Juvenile Atlantic sturgeon habitat use in Newburgh and Haverstraw bays of the Hudson River: Implications for population monitoring. North American Journal of Fisheries Management. 00: 00-00.

TECHNICAL INFORMATION LEAFLETS:

LM-06-05 Comparison of SE-MARK™ calcein stability between manufacturer's lots as it relates to marking efficacy in young-of-year Atlantic salmon

TECHNICAL REPORTS:

Bartron, M.L. and J. Kalie. 2006. Determination of origin Atlantic salmon captured during sturgeon sampling in the Penobscot R. estuary. Aug. 31 Rpt. to NOAA-Fisheries, Orono, ME.

Bartron, M.L. and J. Kalie. 2006. Determination of origin for Atlantic salmon found in the Kennebec and Sandy River Drainage. August 31 Report to Maine Atlantic Salmon Commission, Sidney, Maine.

Bartron, M. 2006. Analysis of the 2005 putative aquaculture escapees captured from the Dennys and St. Croix rivers. Report to NOAA Fisheries and TAC Ad-Hoc Aquaculture Work Group.

Bartron, M.L., D. Buckley, T. King, T.L. King, M. Kinnison, G. Mackey, and T. Sheehan. 2006. Captive broodstock management plan for Atlantic salmon at Craig Brook National Fish Hatchery. Report to Maine Atlantic Salmon Technical Advisory Committee.

Coll, J. and Barbash, P. 2006. Northeast Black Bass Technical Committee Report. July 12, 2006

Sweka, J. A., J. Mohler, and M. J. Millard. 2006. Relative Abundance Sampling of Juvenile Atlantic Sturgeon in the Hudson River. Final Report to the New Your State Department of Environmental Conservation, Hudson River Fisheries Unit, New Paltz, NY, 44 pages.

FORMAL PRESENTATIONS:

Bartron, Meredith - Genetic screening and Atlantic salmon broodstock management. March 1, 2006. US Atlantic salmon annual assessment committee meeting.

Bartron, Meredith - Applications of conservation genetics to Atlantic salmon management. September 1, 2006. American Fisheries Society Annual Meeting, Lake Placid, NY.

Barbash, Patricia - Largemouth Bass Virus in the National Wild Fish Health Survey. Northeastern Fish & Wildlife Conference. April 26, 2006. Burlington, VT.

FORMAL PRESENTATIONS (continued):

Coll, John - Introduction to Fish Health Management (The purpose, history, and benefits of the national Wild Fish Health Survey was provided along with invitation to cooperatively participate). March 22-24, 2006. Association of Mid Atlantic Aquatic Biologists Annual Meeting, Cacapon State Park, WV

Coll, John - Introduction to Fish Health Management. May 23, 2006. National Conference of the Native American Fish and Wildlife Society, Bar Harbor, Maine

Coll, John. The role and infrastructure of the U.S. Fish and Wildlife Service fish health program including the National Wild Fish Health Survey and the need and direction for revision of the U.S. Fish and Wildlife Service Title 50 CFR 16.13 Importation Regulations in conjunction with the National Aquatic Animal Task Force. Sept. 14, 2006. The USDA Aquaculture Liaison Workshop in Eastport, Maine.

Glenney, Gavin - Early Diversification of the Tumor Necrosis Factor Superfamily in Telosts: Genomic Characterization and Expression Analysis. July 1-8, 2006. International Society of Developmental and Comparative Immunology 10th International Congress., Charleston, South Carolina. (poster presentation)

Farrell, Patrick - Fabrication of a freshwater mussel culture facility at White Sulphur Springs National Fish Hatchery, White Sulphur Springs, WV. April 24, 2006. 62nd Annual Northeast Fish and Wildlife Conference, Burlington, VT. (poster presentation)

Fletcher, John, Amanda Masters and Brian Vinci. Pennsylvania Aquaculture Development Center - Lamar NFH raceway renovations. Sept. 21-23, 2006. Penn Aqua Conference 2006, Harrisburg, PA..

Kehler, Thomas - Year-class assessment of juvenile Atlantic sturgeon in the Hudson River. April 24, 2006. 62nd Annual Northeast Fish and Wildlife Conference, Burlington, Vermont. (poster presentation - nominated best student poster).

Millard, Michael - Atlantic sturgeon: status overview and ongoing issues in conservation and restoration. May 2006. Invited talk at: Amer. Fisheries Soc. 2006 Western Div. Annual Meeting, Bozeman, MT.

Millard, Michael - (with J. Sweka, J. Mohler, A. Kahnle, G. Kenney, A. Higgs). Monitoring Atlantic sturgeon stocks in the Hudson River. September 1, 2006. American Fisheries Society Annual Meeting, Lake Placid, NY.

Mohler, Jerre - Effect of natural light on calcein marks applied to juvenile Atlantic salmon and quantification of mark fluorescence. April 24, 2006. 62nd Annual Northeast Fish and Wildlife Conference, Burlington, VT. (poster presentation)

Sweka, John - Assessment of thermal habitat for Maine Atlantic salmon. February 28, 2006. U.S. Atlantic Salmon Assessment Committee Meeting. Gloucester, MA.

FORMAL PRESENTATIONS (continued):
Sweka, John. An age-structured population model for horseshoe crabs in the Delaware Bay area to assess harvest and egg availability for shorebirds. January 3, 2006. Horseshoe Crab Stock Assessment Subcommittee Meeting, Philadelphia PA.

Sweka, John. An age-structured population model for horseshoe crabs in the Delaware Bay area to assess harvest and egg availability for shorebirds. April 24, 2006. 62nd Annual Northeast Fish and Wildlife Conference, Burlington, VT.

Sweka, John. Juvenile Atlantic sturgeon habitat use in Newburgh and Haverstraw bays of the Hudson River: Implications for population monitoring. April 24, 2006. 62nd Annual Northeast Fish and Wildlife Conference, Burlington, VT.

NATIONAL COMMITTEE PARTICIPATION:
Barbash, Patricia – Served as a member of the U.S. Fish and Wildlife Service annual National Wild Fish Health Survey Manual Procedures Revision Committee.

Barbash, Patricia – Served on the USFWS Fish Health Laboratory Quality Improvement committee which focuses on coordination of efforts among USFWS Fish Health Labs to develop and validate new diagnostic assays, as well as perform proficiency analyses of labs.

Coll, John – Served as Chair of the U.S. Fish and Wildlife Service Title 50 CFR 16.13 Importation Regulations Revision Committee.

Coll, John – Served on the U.S. Fish and Wildlife Service annual National Fish Health Policy Revision Committee.

Coll, John – Served on the U.S. Fish and Wildlife Service and Fish Health Section American Fisheries Society joint Fish Health Inspection Review Manual Committee.

Millard, Michael - Served on the U. S. Atlantic Salmon Assessment Committee to provide information and recommendations to the U.S. NASCO delegation.

Mohler, Jerre - Served as a member of the Atlantic States Marine Fisheries Commission (ASMFC) - Atlantic sturgeon Technical Committee.

Mohler, Jerre - Participated as one of 10 team members to review the status of Atlantic sturgeon in the U.S. and make listing recommendations to the Atlantic sturgeon Board of the ASMFC.

Quartz, William – Served on the U.S. Fish and Wildlife Service National Wild Fish Health Survey Database Development and Transfer Committee.

Sweka, John - Served on the U.S. Atlantic Salmon Assessment Committee where he updated and maintained the committee's salmon databases. These databases are used in the completion of the committee's annual report to the North Atlantic Salmon Commission and for salmon stock assessment.

OTHER SIGNIFICANT COMMITTEE PARTICIPATION:
Barbash, Patricia.- Served on the Maine Fish Health Advisory Board to make recommendations to the Maine commissioners relative to fish health issues impacting wild Atlantic salmon populations and commercial aquaculture.

Barbash, Patricia.- Served on the New England Salmonid Health Committee to make recommendations to the New England Atlantic Salmon Commission (NEASC) relative to fish health issues impacting the New England states. To reflect the increase in scope of guidelines to non-salmonids, the committee name has changed to the New England Fish Health Committee. Fish health inspection protocols for LMBV, SVCV and Heterosporosis are being considered for adoption.

Bartron, Meredith - Served on the Atlantic Salmon Biological Review Team, USFWS and NOAA Fisheries.

Bartron, Meredith - Chair, Maine Atlantic Salmon Technical Advisory Committee (TAC) Broodstock Working Group. The committee completed for TAC a broodstock management plan for CBNFH.

Bartron, Meredith - Served on the TAC Stock Enhancement Working Group. This committee is responsible for advising the TAC regarding stocking strategies.

Bartron, Meredith - Served on the TAC Ad-hoc Aquaculture Working Group. Produced *"A Report to TAC on Aquaculture Escapees, 2005"*.

Bartron, Meredith - Served on the TAC Ad-hoc Reintroduction Working Group. This group has been charged with developing a white-paper regarding reintroduction and restoration stocking strategies for Atlantic salmon in Maine.

Bartron, Meredith - Served on the Aquaculture permit compliance committee. Reviews marking plans, genetic data and databases, and genetic origin determination analyses provided by Atlantic salmon aquaculture companies operating in Maine.

Coll, John. - Served on the Great Lakes Disease Committee to represent Region 5 relative to disease issues affecting the Great Lakes and to assure compliance to fish health regulations by participating Service facilities in Region 5 (Allegheny, Pittsford, and White River NFHs).

Coll, John & Patricia Barbash – Served on the Northeast Black Bass Technical Committee, which was formed under the direction of the Northeast Fisheries Administrators Association, and is comprised of state fish and wildlife agencies responsible for the management of these natural resources, as well as the USFWS , which served as the lead organizer of the committee under Ken Sprankle (RO).

Millard, Michael – Serving as Chair of the Atlantic States Marine Fisheries Commission (ASMFC) Horseshoe Crab Technical Committee

Millard, Michael – Participated as a member of the ASMFC Horseshoe Crab Stock Assessment Subcommittee.

OTHER SIGNIFICANT COMMITTEE PARTICIPATION (continued):

Millard, Michael – Served as a member of the Research Working Group, a standing committee serving the needs of the Maine Atlantic Salmon Technical Advisory Committee (TAC).

Millard, Michael - Served on the Review Panel for the 2006 5-Year Review of the USGS Leetown Science Center, August 2006.

Millard, Michael - Participated on the Review Panel for the USFWS Bozeman Fish Technology Center Review, April 2006.

Millard, Michael - Served on the Steering Committee for the International Symposium on Science and Conservation of Horseshoe Crabs, Dowling College, NY June 2007

Sweka, John - Presented a population model for the Delaware Bay horseshoe crab population during a meeting of the Horseshoe Crab Stock Assessment Subcommittee. The goal of this meeting was to review recent population dynamics models for horseshoe crabs and make recommendations to the Technical Advisory Committee as to the strengths and weaknesses of such models.

Sweka, John - Participated on the Northeast Black Bass Technical Committee where he advised fisheries managers on appropriate sample sizes of fish for determination of the presence/absence of largemouth bass virus within a bass population. These sample size recommendations can be found in the Appendix D (pages 104-109) of the Northeast Black Bass Technical Committee Report, Submitted to the Northeast Fisheries Administrators Association, July 12, 2006.

Sweka, John – Serves as the lead on the newly formed Ecology work group of the Maine Atlantic salmon Technical Advisory Committee (TAC) which is charged to: 1) advise the TAC on biotic and abiotic factors affecting salmon populations, 2) respond to proposals dealing with ecological linkages, and 3) facilitate ecological related discussions concerning hatchery product, population, and habitat management in Maine.

Study Number: LM 05 - 02

Title: Evaluation of Atlantic salmon kelt broodstock diets

Principal Investigator: John Fletcher, Northeast Fishery Center (NEFC)
Co-Investigators/Cooperators: Dale Honeyfield, Northern Appalachian Research Laboratory; George Ketola, Tunison Laboratory of Aquatic Science; Ann Gannam, Abernathy Fish Technology Center; Larry Lofton and Fred Yost, North Attleboro NFH; John Sweka, NEFC

Background and Justification

Reproduction from Atlantic salmon (ATS) kelts represents valuable genetic and numeric contributions to restoration fry stocking. However, survival, maturation and gamete quality of kelts has been inconsistent. Nutritional variability and seasonal availability of raw ingredients found in the standard formulation are viewed as potential problems.

Study Objectives

The present study examines the nutritional effect of two diets (standard *vs* USGS) upon kelt reproductive success.

Method and Materials

Biochemistry of the standard diet was examined by comparing mineral and lipid profiles of eggs from wild sea-run ATS and hatchery rejuvenated kelts collected in 2000. The analyses showed that kelt eggs were deficient in copper and selenium and contained excessive amounts of manganese relative to sea-run eggs. The standard diet was found to contain high levels of copper, zinc, manganese and selenium. A five fold reduction of mineral premix was recommended to correct the mineral imbalance found in the standard diet at study inception in 2001. An alternative USGS diet formulation based upon advances in nutritional research moved to processed meals and lower levels of minerals in readily absorbed chelated form. Merrimack and Connecticut River ATS kelts at North Attleboro NFH received standard and USGS diets from rejuvenation in 2001, 2002 to spawning in 2003 and 2004. Evaluation of gamete quality as measured by survival to eye-up was determined for each mature female from a diet-river group by fertilization with milt from all males representing that group; viability of each male from a diet-river group was measured against a pooled composite of cohort eggs.

Results

Individual female reproductive performance in Merrimack and Connecticut ATS kelts varied greatly within trial groups (S.D. ~24%). Differences between river of origin were not detected ($P = 0.67$); however, increase in kelt age ($P = 0.04$) negatively impacted gamete viability. Egg eye-up was similar for kelts fed either standard (73%) or USGS diet (66%), ($P = 0.31$). Profiles of 37 fatty acids in egg lipids and egg content of 20 minerals were measured in 2006. Mean differences found in 12 fatty acids and 5 minerals between diet groups do not appear to indicate overarching impact upon eye-up performance and were likely reflective of dietary ingredients. The data suggests that diets formulated with commercially available feed ingredients are a viable alternative to using the standard diet consisting of fresh or frozen ingredients that may vary in availability, quality and potential pathogen load from year to year.

Study Number: LM-05-05 *(continued study from 2005)*

Title: Assessment of watershed scale habitat features on the survival of juvenile Atlantic salmon

Principal Investigator: Meredith Bartron and John Sweka, Northeast Fishery Center (NEFC)
Co-Invest/Cooperators: Joan Trial and Paul Christman (Maine Atlantic Salmon Commission)

Background and Justification

Atlantic salmon populations are currently at all time low levels throughout New England and eight populations in Maine were listed as endangered by the USFWS and NMFS in December 2000. Present recovery efforts rely heavily on the stocking of juvenile Atlantic salmon with the majority of fish being stocked as fry. In order for recovery efforts to be successful, there is a need to identify areas of the watershed which yield the greatest fry to parr survival and contribute most to the out-migrating smolt population. Identification of such areas will allow managers to refine fry stocking practices to increase survival to the parr stage and optimize the number of out-migrating smolts per the number of fry stocked. Also, identification of critical juvenile Atlantic salmon production areas will help guide future salmon habitat enhancement and restoration efforts.

Study Objectives

1. Determine quantitative relationships between inter-stage survival of juvenile Atlantic salmon and macrohabitat variables such as watershed area, temperature, pH/alkalinity, stream gradient, abundance of non-salmon species and abundance of predatory species.
2. Use genetically marked fry to identify the rearing locations of out-migrating Atlantic salmon smolts and assess relative survival to the smolt stage from various stocking locations.

Materials and Methods

Sheepscot River 2004 broodstock at Craig Brook National Fish Hatchery were genotyped using highly polymorphic microsatellite DNA markers. Using genetic parentage analysis as a “mark”, we will be able to identify stocking location, and use the recapture and abundance of the marked fish to evaluate survival. Within a given river reach, a single genetic group of fry was stocked in May 2005. Estimation of survival to parr stages began in September 2005. Age-0 parr survival was assessed at 27 electrofishing sites throughout the watershed. A subsample of parr had a fin clip taken for genetic analysis to determine the degree of immigration from fish stocked in other river reaches. Abundance of non-salmon species was also estimated at each electrofishing site. Survival of age-0 parr to the age-1 parr stage will be assessed during the early fall of 2006 in the same manner. Survival to the smolt stage will be assessed using rotary screw traps near the Head Tide Dam on the mainstem of the Sheepscot River in the spring 2007. Upon collection, smolts will have a fin clip taken for parentage analysis which will identify the location of stocking as fry. Multiple regression analysis will be used to determine relationships between site level survival to each lifestage and macrohabitat features and abundance and biomass of non-salmon species.

Results

Age-0 parr densities within the Sheepscot River ranged from 0 – 46 parr / 100 m^2 with an average of 9 parr / 100 m^2. Preliminary data analysis showed that approximately 80% of the variation in age-0 parr densities was explained by watershed area and specific conductance, with the largest densities of age-0 parr at sites with smaller watershed areas and higher specific conductance values. Predatory species such as smallmouth bass, largemouth bass, and chain pickerel were found at 26 of 27 electrofishing sites in varying densities. However, age-0 parr abundance was not correlated with abundance or biomass of predatory species. Analysis of age-1 parr data will be conducted following electrofishing in fall 2006 and analysis of smolt data will be conducted following smolt trapping in spring 2007.

Study Number: LM-05-06 *(continued study from 2005)*

Title: Annual genetic characterization of Atlantic salmon broodstock at Craig Brook National Fish Hatchery (CBNFH)

Principal Investigators: Meredith Bartron-USFWS Northeast Fishery Center (NEFC)
Co-Invest/Cooperators: Tom King and Denise Buckley-USFWS CBNFH

Background and Justification

Atlantic salmon broodstock management incorporates the use of genetic characterization of all potential broodstock. Genetic characterization is used to track changes in estimates of genetic diversity, monitor for evidence of artificial selection, and manage the future spawning stock to maintain genetic diversity over time. Genetic data is used to identify optimal spawning pairs, assess recovery of stocked juveniles, and screen for potential aquaculture escapees. Characterization is completed annually for parr collections for future use as broodstock from the six populations maintained at CBNFH, and also for adult salmon returning to the Veazie Dam on the Penobscot River. Genetic characterization and monitoring of the broodstocks follows recommendations described in the CBNFH Broodstock Management Plan, and the Recovery Plan for Atlantic salmon.

Study Objectives

(1) Genetically characterize all Atlantic salmon incorporated into the broodstock programs at Craig Brook National Fish Hatchery. Samples include parr collected from DPS populations and adults from the Penobscot River.
(2) Use estimates of genetic diversity to monitor for changes in genetic diversity, determine familial representation and recovery of stocked families in parr collections, and screen for aquaculture escapees.

Materials and Methods

Eleven microsatellite loci are used to genetically characterize the broodstock. Results are used to examine levels of heterozygosity, number of alleles per locus, alleleic diversity, relatedness, and subsequently used for parentage analysis and during spawning.

Results

Broodstock characterization of the DPS populations was completed for the capture year up to and including 2004. Results from the analysis were evaluated as part of the annual TAC Broodstock Working Group meeting. All adult Atlantic salmon returning to the Veazie Dam on the Penobscot River for broodstock purposes in the summer of 2006 were genotyped for screening, and results were provided to CBNFH prior to spawning, along with relevant data from the 2004 capture year parr.

Study Number: LM-05-07 *(continued study from 2005)*

Title: 2005 pedigree line for the Pleasant River broodstock at Craig Brook National Fish Hatchery

Principal Investigators: Meredith Bartron-USFWS Northeast Fishery Center (NEFC)
Co-Invest/Cooperators: Tom King and Denise Buckley-USFWS CBNFH

Background and Justification

Due to a small broodstock population size and poor recovery of stocked hatchery juveniles, a pedigree line was established for the Pleasant River. To ensure adequate numbers of individuals in the broodstock, the use of a pedigree line was implemented for the offspring from the 2003 spawning year for the Pleasant River. A pedigree line is composed of two parts, where fry from all families are mixed, and half of the juveniles are retained in the hatchery (domestic portion), and the other half are stocked into the river according to stocking practices (captive portion). Following collection of the captive portion from the river as parr, all individuals from both portions are genotyped to determine the familial representation within each group. Individual familial contribution is equalized using individuals from both groups, and then surplus individuals (to broodstock needs) are stocked into the river as smolts.

Study Objectives

1) Ensure a sufficient captive effective population size is available for use as broodstock,
2) Reduce the potential for loss of genetic diversity if only a few parr from a few families were recovered,
3) Reduce the threat of inbreeding when the effective population size is low.

Materials and Methods

Tissue samples were provided to the FWS Region 5 Conservation Genetics lab from individuals from both the domestic and captive portions of the pedigree line. All tissue samples correspond to an implanted PIT tag in each juvenile for future identification. Eleven microsatellite loci are used to genetically characterize the broodstock, and parentage analysis will be completed to determine familial representation.

Results

-Tissue samples were received from 98 juvenile Atlantic salmon as the captive portion, and 1579 juveniles that were retained in the hatchery (domestic portion).

-Genotyping and parentage analysis were completed, and individuals to be retained for broodstock purposes were identified.

-Results were provided to the staff at CBNFH in spring of 2006, and individual smolts were sorted and stocked as appropriate.

Study Number: LM-05-08 *(Continued study from 2005)*

Title: Genetic characterization of an isolated population of Northern Plymouth Red-bellied Cooter (*Pseudemys rubriventris*) in Massachusetts

Principal Investigator: Meredith Bartron, Northeast Fishery Center (NEFC)
Co-Invest/Cooperators: Michael Amaral (USFWS-New England Field Office); Shannon Julian (NEFC)

Background and Justification

The Northern Red-bellied cooter is currently listed as endangered in Massachusetts. There is some discussion regarding whether or not the Massachusetts population is a subspecies, or represents a single isolated population. Because the Massachusetts population is isolated and its status is supplemented by a head-start hatching program, there are additional concerns about the genetic diversity and long-term viability of the population, particularly through high levels of inbreeding. Information about the genetic diversity observed in the Massachusetts population will be used by agencies to revise management and conservation strategies as needed.

Study Objectives

The goal of this project is to characterize the genetic diversity observed in an isolated turtle population in Massachusetts relative to populations observed in other parts of its range. Due to the isolated nature of the population, there is an increased potential for inbreeding to occur in the population, which could result in decreased fitness of individuals in the population, increasing the potential for localized extinction.

Materials and Methods

Samples will be obtained from juvenile turtles in the head-start program run by Massachusetts Department of Wildlife to characterize the isolated population. In addition, samples are being obtained from populations in Maryland, Pennsylvania, Virginia, New Jersey, and North Carolina for comparison to the Massachusetts population. Multiple microsatellite markers will be used to obtain genotypes used to characterize individuals from each population, and data will be analyzed to determine the partitioning of genetic variation observed within and between populations.

Results

Genetic characterization and analysis has been completed. Report is currently in preparation, and will be completed by the end of November, 2006.

Study Number: LM-05-11 *(finalized study from 2005)*

Title: Genetics Assessment of Susquehanna River Shad

Principal Investigator: Meredith Bartron, FWS Northeast Fishery Center (NEFC)
Co-Invest/Cooperators: Shannon Julian, FWS Northeast Fishery Center (NEFC)

Background and Justification

Hatchery propagation and stocking of American shad also represent a large component of the restoration efforts. In a subsample of the returning adult population at Conowingo Dam West Fish lift in 2003, approximately 26% of the adults were of wild origin, and 74% were of hatchery origin (Hendricks 2003a). The Susquehanna River Anadromous Fish Restoration Committee (SRAFRC) collects shad eggs from two locations on the Susquehanna River, and from the Hudson and Delaware River for stocking in the Susquehanna River. If possible, determination of the source of wild origin shad in the Susquehanna that successfully returns as adults (as the marked individuals) which then successfully produce offspring that return as adults (unmarked) will aid in restoration efforts, through the targeting of those stocks for stocking efforts.

Study Objectives

We propose to conduct genetic investigations of adult shad returning to the Lapidum area and to Conowingo Dam in the spring of 2005, to identify the source of wild-origin adult shad. Comparisons of estimates of genetic diversity between shad of hatchery and wild origin may identify which introduced stocks were successful in establishing reproducing populations. Additionally, characterizing shad utilizing different sections of river may aid in the understanding of life history characteristics and behavior.

Materials and Methods

We will use a combination of molecular markers to quantify genetic diversity, estimate of diversity and the partitioning of genetic variation for shad returning throughout the run. Additionally, in combination with otolith analysis to identify hatchery or wild origin, genetic comparisons can be made between individuals of different origin. To conduct these analyses, we are developing additional microsatellite markers to aid in population resolution.

Results

-Microsatellite libraries were created for American shad and the shad DNA inserts from bacteria were sequenced, resulting in 1200 sequences that have potential microsatellite loci.

-Microsatellite loci were screened for variability and cross-species amplification. Sequences of microsatellite primers developed have been submitted to GenBank, and a primer note for submission to Molecular Ecology Notes is being prepared.

-Tissue samples were collected from adult shad in the Hudson, Delaware, and Susquehanna rivers, and otoliths have been analyzed by PFBC. Using developed microsatellite loci, individuals need to be genotyped for the study and a final report needs to be prepared.

Study Number: LM-06-01

Title: Assessment of thermal habitat for Maine's DPS Atlantic salmon

Principal Investigator: John Sweka, Northeast Fishery Center (NEFC)
Co-Invest/Cooperators: Richard Dill and Joan Trial (Maine Atlantic Salmon Commission)

Background and Justification

Water temperature is a critical aquatic habitat feature influencing fish species composition. Increasing water temperature due to thermal pollution, removal of riparian vegetation, water withdrawal, and possibly global warming, has the potential to change aquatic species composition by making available habitat more energetically suitable for some species, while making it less suitable for others. Physical habitat in Maine Atlantic salmon DPS rivers has been mapped, classified, and quantified. However, less is known about thermal habitat. Physical habitat may be adequate for spawning and juvenile rearing, but if stream temperatures exceed that which is required for parr growth, then the total amount of available rearing habitat may be much less than is currently thought. Also, changes in thermal habitat may make historic salmon rivers less suitable for Atlantic salmon and more suitable for invasive species such as smallmouth bass, which tend to have higher thermal preferences (and tolerances) than Atlantic salmon.

Study Objectives

The overall objective of this study is to combine existing temperature data with available growth/bioenergetics models in a GIS for a spatial assessment of thermal habitat and overall habitat suitability of juvenile Atlantic salmon in Maine rivers.

Specific objectives are to:

1. Determine trends in summer temperature regimes through time
2. Create maps of suitable thermal habitat and compare these maps to those of physical habitat
3. Create maps of potential Atlantic salmon parr growth based on thermal conditions.
4. Compare thermal habitat suitability of Atlantic salmon parr vs. smallmouth bass

Materials and Methods

The Maine Atlantic Salmon Commission has been recording hourly temperature readings at many sites for a number of years. Temperature data from sites where loggers have been deployed for long time periods (≥ 10 years) will be used to determine if temperatures have increased in recent years. Data from loggers distributed throughout Maine watersheds will be incorporated into a GIS and linear referencing tools will be used to interpolate stream temperatures between temperature logger sites. Because temperature data can show significant inter-annual variation, interpolations of summer temperatures will be conducted in five year blocks so as to estimate mean temperatures throughout the summer months. Resulting maps will illustrate where suitable thermal and physical habitat occurs within a given watershed throughout the summer months. Combining maps of thermal habitat with bioenergetics models will show where juvenile salmon growth is greatest and where thermal habitat may be more suited for warmer water species such as invasive smallmouth bass.

Results

Long-term temperature data sets from a few sites within Maine rivers showed that average summer water temperatures have significantly increased by as much as 2.4ºC between 1962 and 2003.

Creation of maps of thermal habitat is currently being conducted for the Narraguagus and Sheepscot watersheds, as these systems currently provide the greatest temporal and spatial coverages of temperature data.

Study Number: LM-06-02

Title: Cryopreservation of Atlantic sturgeon sperm.

Principal Investigator: Patrick R Farrell Northeast Fishery Center (NEFC), William Wayman, Warm Springs Fish Technology Center (FTC), Brian Richardson, Maryland Department of Natural Resources

Co-Invest/Cooperators: NEFC biologists.

Background and Justification

The Atlantic sturgeon (*Acipenser oxyrhynchus oxyrhynchus*) populations in eastern North America have been declining for nearly a century as a result of habitat loss and over harvest. In response to such declines, efforts to restore Atlantic sturgeon by using wild brood stock have been started along the east coast of North America. A major impediment to the artificial propagation of this species of sturgeon has been the simultaneous capture of ripe fish of each sex. Intermittent spawning habits, a relatively late age of sexual maturation, and severe depletion of stocks contribute to this problem. Despite developments in hormone-induced ovulation and expression of milt, the availability of ripe fish continues to be a major obstacle to artificial propagation of this sturgeon.

Cryopreservation has been used successfully to establish germ plasm repositories for a number of fish species. However, the literature indicates that cryopreservation protocols are species specific. The critical factors that need to be optimized include, composition of the extender, equilibration time, rate of freezing and thawing, composition of thawing solutions, and sperm quality. Warm Springs FTC has made advancements in some of these areas with salmon and shortnose, pallid & lake sturgeon.

Study Objectives

Investigate the feasibility of long term storage of Atlantic sturgeon sperm at the Northeast Fishery Center using cryopreservation techniques and methods developed at Warm Springs Technology Center.

Materials and Methods

The Cryopreservation procedure followed the established methods currently in use with salmonids with the exception of the extender and the freezing rate. Hanks balanced salt solution with 5% methanol supplied by William Wayman Ph.D. Warm Springs was the extender used. Placing the straws on 3cm of foam floating on liquid nitrogen for 4 minutes then directly into the LN2 provided the correct freezing rate (William Wayman., US Fish and Wildlife Service, personal communication). The thawing rate was 9 seconds in a 40C water bath.

Results

A fertilization rate comparison between preserved and fresh sperm produced no cell division in either treatment, suggesting non-viable eggs were the cause.

Sperm collected from three males showed motility of <95% prior to preservation, but after being preserved and held in LN2 for 10 weeks, when thawed motility was 0% in all 3 samples. Samples sent to Warm Springs FTC diluted 1:1 with HBSS (extender) had very low motility upon arrival. After discussion with Bill Wayman, technique errors were ruled out and contaminated extender was deemed the most likely cause.

Study Number: LM-06-03

Title: Methanol and egg yolk as cryoprotectants for Atlantic salmon spermatozoa

Principal Investigator: Patrick R Farrell Northeast Fishery Center (NEFC), William Wayman, Warm Springs Fish Technology Center (FTC), Wade Jodun, R5 Regional Office
Co-Invest/Cooperators: NEFC biologists.

Background and Justification

Despite decades of stocking, sea-run returns of Atlantic salmon (ATS) continue to be at very low levels. In 2002, returns of endangered sea-run ATS on the Pleasant, Dennys, and Narraguagus Rivers in Maine numbered < 10 fish. Connecticut and Merrimack River returns numbered < 60 fish and the returning female:male ratio on the Connecticut River was skewed approximately 2:1 The continued decline of ATS populations across the N.E. U.S. and the sparsity of males in some systems has led the USFWS to take a strong interest in cryopreservation as a tool to preserve fish germ plasm for extended periods and to form sperm banks at fish production facilities where a shortage of male fish exists.

Cryopreservation of salmonid sperm has been reported for several species. However, literature indicates that cryopreservation protocols contain critical factors such as composition of the extender, equilibration time, and rate of freeze / thaw for each individual species. Early attempts to freeze sperm in straws and in 1-ml ampoules were unsuccessful. In contrast, a pellet technique in which ampoules were frozen produced high fertilization rates (80%) in ATS. But, these results could not be duplicated and variable results were obtained using the pellet technique. Early trials at NEFC tested the effect of various extenders on the cryopreservation of ATS semen in straws. Here, glucose extender (54.04 g/L glucose and 1.7 g/L KCl) with 5% dimethyl sulfoxide gave higher fertilization rates than others.

In 2003 a study with ATS semen using glucose extender with 10% methanol supplemented with 13.3% egg yolk in 0.5ml straws produced egg eye-up results of 83.5% equal to hatchery production rates. Although cryopreservation of small quantities with 0.5ml straws may offer a technique for maintenance of genetic material across generations, this methodology would not be practical for production scale spawning. However, it has been demonstrated in cryopreservation trials with rainbow trout that 5.0 ml straws gave 73% fertilization with 1600 to 2000 eggs per straw while rates for 0.5ml straws were similar but only slightly higher at 84 %. The proposed research to be conducted at White River NFH in 2006 would validate 2003 trials with Cloud extender, with methanol and egg yolk in 0.5 ml straws and explore feasibility of freezing sperm in 5.0 ml straws, a size more in line with hatchery production needs.

Study Objectives

in 2006 our objectives are to test the repeatability of the 2003 study with the 0.5ml straws and and test various freeze / thaw combinations upon spermatozoa in 5.0 ml straws.

Materials and Methods

Sperm will be collected and checked for motility. Sperm showing the highest motility will be pooled, extracted and mixed with extenders at a ratio of 1:4 (sperm:extender). Solutions will be drawn into 0.5 ml clear French straws then frozen in liquid nitrogen vapor for 30 minutes and placed directly into liquid nitrogen for storage overnight. The following day, unfertilized eggs will be mixed and separated into 72 lots of 200 eggs each. The frozen sperm will be thawed at 40°C in a water bath for 7seconds. Motility of sperm will be checked and sperm used immediately upon thawing. One to two straws will be used to fertilize each 200 egg lot with 5 lots for the treatment. Equivalent controls will be set up using unfrozen, highly motile sperm. At 2 min. following the addition of thawed sperm, eggs will be water hardened and disinfected in 50 ppm iodophore for 30 min and incubated in Heath trays. Once eggs are ar the eyed stage, eggs will be physically shocked, and survival measured as percent eye-up.

Results

Study to be conducted fall of 2006

Study Number: LM-06-04

Title: Hatchery-spawning of captive-wild Atlantic sturgeon

Principal Investigator: Jerre W. Mohler; Northeast Fishery Center
Co-Invest/Cooperators: John W. Fletcher, Patrick Farrell; NEFC

Background and Justification:

Commercial records of Atlantic sturgeon (ASN) landings from the late 1800's to the present indicate a severe decline in the fishery. This problem has been addressed in the form of management plans for restoration of this species throughout its range by the Atlantic States Marine Fisheries Commission (ASMFC). The ASMFC developed guidelines for culture and restoration activities for ensuring consistency with goals and objectives of the ASMFC's Fishery Management Plan for Atlantic Sturgeon, November, 1990. Various recommendations were made in Special Report No. 22 titled: Recommendations Concerning the Culture and Stocking of Atlantic Sturgeon. Recommendation 1.4 states: "Basic cultural experiments should be undertaken at appropriate federal and state facilities to provide information on ..... production techniques, rearing and holding densities...".

From 1993 -1998, NEFC successfully spawned wild Hudson River ASN. After 1998, no further wild broodstock collection was pursued and efforts were concentrated on fish already present at NEFC. To date, only one captive female ASN was brought into maturity after being in the hatchery for an extended period. That particular fish was captured in the Hudson River during in 1995, producing young shortly after transport to NEFC. Five years later (2000) this individual was discovered to have produced a new generation of mature oocytes. An attempt to spawn this female failed due to improper timing for egg extraction. However, to date, no wild-caught **sub-adult** female ASN have been brought into sexual maturity in a hatchery.

At this time, there are 2 mature female ASN in captivity at NEFC which were captured in the Delaware River in 1991. Both fish were sub-adult upon capture but ages are unknown. Biopsy in the spring of 2006 showed one of these females had mature oocytes. Comparison between age and size of mature feral female ASN and captive wild females at NEFC will be information valuable to future restoration efforts for the species since captive sub-adult fish may be the only reliable source of future broodstock for some rivers.

Study Objectives:

In spring/summer of 2006, a spawning attempt was made with a mature female ASN of Delaware R. origin to test spawning procedures and compare age and size at maturity with that known for feral fish.

Materials and Methods:

The mature female broodstock of interest in this study: 1991 Delaware River; PIT-tag # 421D5B5776. The fish was biopsied in May/June 2006, via laproscopy The polarization index (PI) was determined in order to track egg maturity. In late June the average PI was < 0.10 with about 20% at 0.07 indicating that the oocytes were likely mature enough to respond to spawning induction hormones. A spawning attempt was made using procedures from the ASN Culture Manual. Milt was obtained via hormone injection of 3 male ASN also of Delaware origin. Measurement and age of the female will be compared to that previously reported for mature wild sturgeon on the Hudson River to see if hatchery-reared fish held in extended periods of captivity are similar in size/age to their wild counterparts.

Results

The spawning attempt was not successful in that the ovulation was only partial and those eggs which were harvested and fertilized did not develop. Post-spawn analysis suggested that oocytes should have been given more time to mature before the spawning attempt. The female weighed 47.7 kg and was 208 cm total length. Based on Hudson River data, the average weight for a 208-cm wild fish in spawning condition is 58 kg, indicating that the condition was somewhat depressed in the study female.

Study Number: LM-06-05

Title: Comparison of SE-MARK™ calcein stability between manufacturer's lots as it relates to marking efficacy in young-of-year Atlantic salmon .

Principal Investigator: Jerre W. Mohler-NEFC
Co-investigators: Tom Kehler – NEFC ; Andrew McCool – Syndell Laboratories

Background and Justification

In the quest for discovery of a long-lasting, non-lethally detectable mark which could be applied en-mass to large numbers of fish simultaneously, the Northeast Fishery Center-Lamar, PA (NEFC) began experimenting with the fluorochrome dye calcein in 1995 and performed numerous laboratory experiments which demonstrated its ability to produce a fluorescent mark in calcified structures of Atlantic salmon fry. Various researchers have since performed marking trials and reported post-marking mortality as similar to that of control fish. There is currently an Investigative New Animal Drug Permit (INAD# 10-987) in place to evaluate immersion marking of fish 2 grams or less with calcein manufactured by Western Chemical, Inc. (SE-MARK™). The INAD is used not only evaluate the ability of the drug to label fish, but also to evaluate post-marking mortality and mark quality as part of drug efficacy. Therefore, it becomes important that various production lots of the drug are of consistent quality. We will immerse young-of-year Atlantic salmon in one of 3 lot numbers of SE-MARK™ calcein to investigate product stability between lots as it relates to marking efficacy.

Study Objectives

We used 720 young-of-year (YOY) Atlantic salmon to determine product stability between three different lots of SE-MARK™ calcein as it relates to marking efficacy during the summer of 2006.

Methods

Atlantic salmon fry produced from domestic stocks spawned at White River National Fish Hatchery, Bethel, VT were used in the study. All fish were marked using raw Washington Spring water as dilution water for the concentrated chemical. Four treatments were established in triplicate tanks: SE-MARK™ lots: (1) #103003 (2) lot #080304 (3) lot #031405 and (4) unmarked controls. As such, 12 two-foot-diameter circular tanks each received 60 fish having an average weight of about 2 grams. Fish remained in their respective tanks for about 3 days to acclimate prior to immersion marking. SE-MARK™ treatment fish were marked via osmotic induction using a 3% salt bath pre-treatment for 4 min followed by immersion in 0.5% SE-MARK™ calcein solution for an additional 4 min as outlined in the calcein INAD protocol. Control fish received the salt bath pre-treatment, but no calcein exposure and otherwise handled similarly. Study replicates of each treatment were immersed simultaneously but in separate screened containers. Temperatures was similar in all treatments and dissolved oxygen was maintained >7 mg/L in all marking solutions. After marking, fish were returned to their respective culture tanks for observation of immediate and delayed mortality for one week post-marking. Six fish from each replicate were photometrically evaluated for mark brilliance at 2 weeks post-marking. Data were analyzed via ANOVA using Sigma-Stat software at an alpha level of 0.05.

Results

There was no difference in mortality between treatments with only 1 fish dead overall at one-week post-immersion. Photometric evaluation of fish scales revealed no significant differences in mark luminosity between SE-MARK™ lot numbers.

Study Number: LM-06-06

Title: Removal of calcein in wastewater resulting from immersion-marking of fish

Principal Investigator: Jerre W. Mohler; Northeast Fishery Center (NEFC)
Co-Invest/Cooperators: Kelly Bradley; Lock Haven University

Background and Justification:

Millions of larvae are produced and stocked each year as part of the American and hickory shad restoration program for the Susquehanna River, PA. In order to assess survival to adulthood as related to original stocking site, batch marks are applied to all larvae using oxytetracycline (OTC) which leaves a detectable yellow fluorescence on the otolith of treated fish. Since many stocking sites are used, as many as 5 marking episodes at various day-intervals covering an 18-day period of time are necessary to induce the desired banding pattern of marks on the otoliths of a particular batch of the fish. If another compound could be used in combination with OTC, the number of possible combinations of marks could be greatly increased, reducing hatchery residence time for fish. This would save time and money for and result in greater survival to stock-out. Use of calcein for fish marking is under the regulation of an Investigational New Animal Drug permit (INAD) granted by the U.S. Food and Drug Administration. Under this permit (INAD #10-987), the approved drug supplier is Western Chemical of Ferndale, WA, which markets the compound under the trade name of "SE-MARK". However, the INAD also states that no discharge of calcein marking solution is allowed. It must be shipped to Emerald Services, Inc., in Tacoma, WA for disposal making it impractical for use to mark shad larvae due to large volumes of water used. We will evaluate calcein removal from solutions using various media in a packed column.

Study Objectives:

We will screen 3 media for effectiveness at removal of calcein residue from solutions of SE-MARK™ during 2006 at the NE Fishery Center, Lamar. Any effective medium will be quantified for it's effectiveness of treatment and verified with a pilot-scale test on previously-used calcein solution.

Materials and Methods:

Pre-evaluation – A standard curve reflecting absorbance at 490nm was constructed using SE-MARK™ at concentrations of 0.1, 0.5, 1.0, 2.0, 5.0, 10, and 25 mg/L. Measurements were made on a GeneSys-20 spectrophotometer using distilled water as a diluent for solutions. *Evaluation procedures* - Three media were initially screened for effectiveness at calcein removal: 1) limestone screenings/sand, (2) pure calcium carbonate medium, and (3) activated carbon. Media were evaluated using an Imhoff cone containing a 20um screen near the outlet to hold the media in place during tests. One liter of SE-MARK™ calcein solution at [100 mg/L] was slowly poured through the Imhoff column which was filled with the particular medium to be evaluated. Initial screening evaluations consisted of visual observance of color removal, followed by absorbance measurement and comparison to the standard curve if warranted. Any of the 3 media showing effective color removal were used in equilibrium adsorption tests to quantify the removal capacity of the medium. Once adsorption tests were completed, the results were used in a pilot trial using a packed column for treating a batch of used calcein solution currently in storage at NEFC. Used calcein solution was analyzed for its calcein concentration by comparison to the standard curve prior to sizing the packed column. The resulting filtrate from the column was also compared to the standard curve to quantify calcein removal efficiency.

Results

- Of the 3 media tested, only activated carbon gave the desired results.
- The adsorption isotherm showed that 7.43 grams of carbon were needed to get 96% calcein removal from a 1-L solution containing 125 mg/l calcein concentration.
- After the 1st pass through treatment column, spectro-analysis showed < 2 mg/l calcein in effluent.
- After a 2nd pass through the column spectro-analysis showed < 0.5 mg/L calcein remained.
- Overall, activated carbon was effective at removal of calcein from waste fish-marking solutions.

Study Number: LM-06-07

Title: Movements of Adult Atlantic Sturgeon of the Hudson River

Principal Investigator: Michael Millard; Northeast Fishery Center (NEFC)

Co-Invest/Cooperators: John W. Fletcher, Jerre Mohler, and John A. Sweka – NEFC; Andrew Kahnle and Kathryn Hattala - NY Dept. of Environ.Conservation; Dan Erickson – Wildlife Conservation Society

Background

Atlantic sturgeon (ASN) of the Hudson River Estuary have supported some level of subsistence or commercial fishing since colonial times. Highest annual landings of the time series (231,000 kg) occurred in 1898. Landings quickly dropped to 15,000 kg or less per year and remained at low levels through the early 1980's. In 1990, the Atlantic States Marine Fisheries Commission (ASMFC) adopted an interstate fishery management plan for ASN. States with open fisheries began to monitor harvest. In 1993 through 1995, New York regulated the ASN fishery with size limits, seasons, area closures, and quotas derived from preliminary population modeling. As more data became available, it became apparent that the Hudson River stock was being over-fished, therefore NY implemented a harvest moratorium in 1996. In 1998, the ASMFC adopted an amendment to the Management Plan for ASN which banned possession in all Atlantic coastal states and recommended that states with spawning populations sample adults every 5 years and identify bycatch losses in state waters. As such, we captured adult ASN during the spawning migration and tracked fish until they left the Hudson estuary.

Objectives

The objective of this study is to permit the tracking of adult ASN entering the Hudson River in order to locate spawning grounds by: 1) capture and tagging of prespawning adult ASN in the Hudson River estuary and 2) equipping 15 fish per year with sonic transmitter tags.

Methods

USFWS and NYSDEC crews gill netted for adult ASN April 25 - July 14, 2006. A total of 354 nets were deployed by both crews over the sampling season and effort was distributed among various locations in the river from Croton Point (rm mile 35) to Catskill (rm 113). Our goal was to capture adult sturgeon in the lower river as the fish entered the estuary. However, lack of catches in this area by the last week of May prompted us to sample in other locations. Captured fish were held live well on the boat. All fish were examined for previous tags or marks. If no tags were present, a PIT and Carlin tag were applied for future evaluations. In addition some fish received sonic and/or pop-off archival tags (PAT) to allow monitoring of their movements. Fish were identified to sex where possible, weighed, and measured.

Results

We caught 44 adult and one juvenile ASN in 2006. The majority (42 out of 44) of adult ASN were captured in the Rogers Point – Norrie Point area. The two remaining adults were captured in the Catskill area None were captured farther south than Rogers Point (river mile 80). Sex ratios were skewed in favor of males with 32 confirmed males and 3 confirmed females. The sex of 9 additional adults captured in the Rogers Point area was not positively determined. The greatest catches of adult ASN occurred on June 19-20 in the Rogers Point and Norrie Point areas when 34 of the 44 total individuals were captured. Nine of these fish were released without tags and one died due to excess handling stress. Ten pop-off archival tags (PAT) and 12 sonic tags were applied. A small fin clip from the caudal fin was taken from 31 individuals for future genetic analysis. Samples are currently held at NEFC Conservation Genetics Lab. Samples will be split into thirds with one-third retained at the NEFC, one-third to Ike Wirgin's lab at the NYU School of Medicine, and one-third to NOS Marine Forensics Branch in Charleston, SC.

Sampling will begin again in late April 2007. We will again focus our sampling effort in the lower portion of the river to catch adult Atlantic sturgeon as they enter the estuary.

Study Number: LM-06-08

Title: Development of microsatellite loci for *VIllosa fabalis* (rayed bean mussel)

Principal Investigator: Meredith Bartron and Shannon Julian, USFWS-Northeast Fishery Center (NEFC)
Co-Invest/Cooperators: Catherine Gatenby (USFWS-White Sulphur Springs)

Background and Justification

Villosa fabalis (rayed bean mussel) is currently a candidate species for listing. Restoration and recovery efforts, should the species become listed, as well as current efforts to learn more about the species would greatly benefit from a survey of the genetic population structure. Information could then be used to direct and prioritize population recovery efforts, incorporating the genetic status of the populations of concern.

Study Objectives

Microsatellite loci are nuclear DNA-based markers that have been proven to be valuable tools in describing and characterizing the genetic structure of populations. We will develop variable microsatellite loci that will be useful in characterizing the population structure of *Villosa fabalis* populations. Populations will be sampled for characterization based on population status and geographic location. Information regarding genetic population structure will be used to improve understanding about the evolutionary history of *Villosa fabalis*, and to aid in conservation and management efforts.

Materials and Methods

Initial research including microsatellite primers will be developed. Populations to characterize will be identified through cooperatively working with White Sulphur Springs NFH and other partners to identify and prioritize sampling locations. Results from population characterization with genetic makers will be used to evaluate differences between populations and partitioning of genetic diversity throughout the range. Results will be used for management and conservation efforts.

Results

Tissue samples from mantle clips were obtained from *Villosa fabalis*. DNA was extracted and sent to Genetic Identification Services (Chatsworth, California) for microsatellite library development. Microsatellite libraries have been received from GIS, and will be sequenced and screened for variable microsatellites for primer development.

Study Number: LM-06-09

Title: Determination of origin Atlantic salmon captured during sturgeon sampling in the Penobscot River estuary

Principal Investigator: Meredith Bartron and Jeff Kalie (FWS)

Co-Invest/Cooperators: Jeff Murphy, NOAA Fisheries-Orono

Background and Justification

Two adult Atlantic salmon of unknown origin were captured in the gill nets in Penobscot River. NOAA-Fisheries requested that the genetic origin of these individuals be determined. Both smolt and fry stocking are used as a restoration stocking strategy in the Penobscot River, however there is some natural reproduction in the Penobscot River as well. Alternately, individuals captured may also have originated from other locations in Maine, from either hatchery or natural reproduction.

Study Objectives

NOAA-Fisheries requested genetic analysis for the two Atlantic salmon to determine origin. To determine if the individuals are hatchery origin (fry stocking), genetic parentage assignment was conducted using both DPS and Penobscot broodstock databases from the estimated spawn years at Craig Brook National Fish Hatchery (CBNFH). In addition, continent and country (US (Maine) versus Canada) of origin testing was conducted to determine lineage.

Materials and Methods

Fin clips from 2 Atlantic salmon were received July 3, 2006. Age information was provided (Jeff Murphy, NOAA Fisheries, personal communication) for both individuals, which was used to determine the appropriate spawn year for parentage classification. DNA was extracted and eleven microsatellite loci were analyzed. Parentage analyses were completed using Cervus and population assignment was completed using GeneClass computer programs. Parentage analysis was completed using potential parents from the DPS and Penobscot broodstocks spawned in 2000, 2001, and 2002. Parentage assignment results were confirmed with spawning records of actual spawning pairs using CBNFH spawning records. Population assignment was done using two different baselines: to determine continent of origin following aquaculture permitting protocols, and to assign to country of origin (US-Maine or Canada). Population assignments were completed using seven loci (opposed to eleven loci for parentage) due to the number of loci used in the continent-of-origin baseline.

Results

Parentage was assigned to both of the unknown origin individuals. Individual ATS-06-001 was determined to be an offspring of the 2002 Penobscot broodstock spawned November 12, 2002 at CBNFH, consistent with the scale-aging estimate. Specifically, the spawning pair identified was male PIT # 43254C0569 (CG LabID CBPN-02-217) and female PIT # 431A162D01 (CG LabID CBPN-02-322) from the sea-run Penobscot broodstock. Parentage was also assigned to ATS-06-002, however the result was inconsistent with the scale-aging estimate. Scale ageing for ATS-06-002 determined the individual was from the 2000 spawn year; however parentage was not able to be assigned to any known spawning pair for the 2000 DPS or Penobscot spawn year. Parentage analysis was also conducted using data from the 2001 and 2002 spawn years (DPS and Penobscot), and parentage was identified as the spawning pair of male PIT # 413949042B and female PIT # 501F4C2611, spawned on November 13, 2001.

Assignment testing was used to confirm lineage of both unknown origin samples. Continent-of-origin testing indicated both individuals were of North American origin. Further tests to discriminate between Maine and Canadian origin (89.5% assignment accuracy to Maine, 72.3% assignment accuracy to Canada) determined both unknown individuals originated from Maine. Assignments to specific populations within Maine were inconclusive.

Study Number: LM-06-10

Title: Determination of origin for Atlantic salmon found in the Kennebec and Sandy River Drainage

Principal Investigator: Meredith Bartron & Jeff Kalie, Northeast Fishery Center
Co-Invest/Cooperators: Paul Christman, Maine Atlantic Salmon Commission

Background and Justification

Maine Atlantic Salmon Commission (ASC) has been using streamside incubation to stock Atlantic salmon into the Sandy River, a tributary to the Kennebec River (Paul Christman, Maine ASC). Grilse were observed at the trap on the Kennebec River in the summer of 2006. Scales and fin clips were obtained from each individual. Scale aging identified individuals of river (wild), or hatchery fry origin. If the streamside incubation study was successful in producing adult returns, adults would begin to appear in the river in 2006 as grilse, having emigrated as a two-year old smolt in 2005, and returning as a grilse after 1 sea-winter in 2006. Therefore, it is possible that these individuals are from the incubation study.

Study Objectives

To determine if the unknown origin individuals are from the streamside incubation study, microsatellite loci were used to genetically characterize both the parents and unknown origin returns to the Kennebec River. If not genetically assigned to parental pairs from the streamside incubation study, unknown-origin adults were compared to the DPS broodstocks and to the Penobscot broodstock to determine if individuals could be strays from neighboring drainages.

Materials and Methods

Fin clips from 2 Atlantic salmon were received July 3, 2006. Age information was provided (Jeff Murphy, NOAA Fisheries, personal communication) for both individuals, which was used to determine the appropriate spawn year for parentage classification. DNA was extracted and eleven microsatellite loci were analyzed. Parentage analyses were completed using Cervus and population assignment was completed using GeneClass computer programs. Parentage analysis was completed using potential parents from the DPS and Penobscot broodstocks spawned in 2000, 2001, and 2002. Parentage assignment results were confirmed with spawning records of actual spawning pairs using CBNFH spawning records. Population assignment was done using two different baselines: to determine continent of origin following aquaculture permitting protocols, and to assign to country of origin (US-Maine or Canada). Population assignments were completed using seven loci (opposed to eleven loci for parentage) due to the number of loci used in the continent-of-origin baseline.

Results

Parentage was assigned to the Penobscot domestics for one of the five returning Atlantic salmon sampled in the Kennebec. Individual (ASC vial #3) was determined to be an offspring of the Penobscot domestics spawned in 2002 for the incubation study. Specifically, the offspring resulted from the pairing of male #52 and female #54 from the Penobscot domestics spawned in 2002. Parentage to the Penobscot domestics or any DPS or Penobscot sea-run broodstock spawned between 2000 and 2002 was not able to be assigned for three samples received (ASC vial #1, 9, and 13). Parentage was assigned to Penobscot sea-run broodstock for ASC #10 however, the parental pair identified for ASC #10 was not a known (documented) spawning pair.

Assignment testing was used to confirm lineage of all five unknown origin samples. The continent-of-origin testing indicated all individuals were of North American origin, and further tests to discriminate between Maine and Canadian origin (89.5% assignment accuracy to Maine, 72.3% assignment accuracy to Canada) identified all unknown individuals as originating from Maine. Assignment to a specific population within Maine was inconclusive.

Study Number: LM-06-11

Title: Population genetic structure of brown bullheads (*Ameiurus nebulosus*) in Presque Isle Bay and surrounding area of Lake Erie

Principal Investigator: Meredith Bartron & Mike Millard, USFWS, NEFCr, Lamar, PA

Co-Invest/Cooperators: Eric Obert, Pennsylvania Sea Grant; Jim Grazio, Pennsylvania DEP, & Vicki Blazer, USGS Leetown Science Center

Background and Justification

Brown bullheads (*Ameiurus nebulosus*) in Presque Isle Bay have been experiencing a high rate of liver and skin tumors although these rates have decreased over time. In other parts of the Great Lakes, a strong correlation between exposure to polycyclic aromatic hydrocarbons (PAHs) and liver tumors has been documented. Presque Isle Bay has been listed by the U.S. Environmental Protection Agency as an area of concern, in part due to high levels of multiple contaminants including PAHs. Although brown bullheads found in Presque Isle Bay experience higher incidences of tumors, it is not fully known if the bullheads in Presque Isle Bay are strictly resident to the bay, and therefore that tumor incidence could be directly linked to the toxins in the bay.

Study Objectives

The primary goal of this study would be to determine if brown bullhead populations within the bay represent a discrete population from those outside of the bay. If no genetic differences are observed and populations are therefore considered panmictic, contaminant exposure outside of the bay may be contributing to development of tumors, or use of habitat outside the bay in areas with lower toxin levels may provide temporary refugia that may be contributing to reduced toxin exposure and therefore decreased incidence of tumors. Additionally, decreased direct exposure to toxins due to sediment accumulation covering toxic sediment layers within the bay is resulting in the decreased incidence of tumors. Alternately, if brown bullheads within Presque Isle Bay are genetically differentiated from populations within Lake Erie, contaminant exposure would be limited to toxins found within the bay, and decreased tumor incidences may be due to heritable genetic adaptation to toxins consistent with results observed in the analysis of gene expression.

Materials and Methods

Tissue samples (fin clips) will be obtained from brown bullheads within Presque Isle Bay and from locations outside of the bay. Samples will be collected concurrently during the same season and year to prevent potential sampling of a single population migrating through multiple habitats. Genetic analyses conducted would include quantification of allele frequencies, estimates of genetic diversity, partitioning of genetic variation, and level of population differentiation among brown bullhead populations. Results of genetic analysis would be used to determine if brown bullheads in Presque Isle Bay represent genetically different populations from those in Lake Erie.

Results

Samples were collected from brown bullheads in Presque Isle Bay and from Elk Creek, a tributary to Lake Erie in June of 2006. Specifically, three locations within the bay were sampled: Misery Bay and Horseshoe Cove, Sara's Cove, and the lagoon area. Fin clips were obtained from all sites, including from bullheads sampled in Elk Creek. DNA was extracted from fin clips and sent to Genetic Identification Services (Chatsworth, CA) for microsatellite library construction. Libraries have been received, and library sequencing and primer development will occur in the fall and winter of 2006. Population characterization will occur in spring and summer of 2007, with additional sampling in the summer of 2007 as needed based on preliminary results.

Study Number: LM-06-12

Title: DNA analysis of unknown species eggs

Principal Investigator: Shannon Julian and Meredith Bartron, USFWS-NEFC

Co-Invest/Cooperators: Betsy Trometer (USFWS-White Sulphur Springs)

Background and Justification

To determine the species origin of fish eggs collected from the Niagara River. Eggs were thought to be from lake trout. If lake trout were determined to have produced these eggs, results would be used to direct monitoring and assessment efforts to determine reproductive capacity on the reef where the eggs were collected, and to monitor for juvenile survival.

Study Objectives

The purpose of this study was to determine the species of origin for the eggs collected in the Niagara River.

Materials and Methods

Two vials of fish eggs spawned by an unknown species were received in our lab in February of 2006 from the FWS Lower Great Lakes FRO. Embryos were excised from the outer membrane and digested with ProteinaseK for approximately 3 hours. DNA was isolated by boiling in the presence of Chelex 100 resin. Ribosomal DNA was amplified using primers flanking the 18S and 5.8S regions of the first internal transcribed spacer region (ITS-1). Resulting PCR products were purified and used as template for sequencing reactions.

Results

Sequences of approximately 735 base pairs were obtained from three individual embryos sampled from vial # 234. Extracted embryos from vial # 4 did not yield sufficient quality DNA for sequencing. Sequences were compared to existing ITS-1 sequences stored in GenBank (www.ncbi.nlm.nih.gov/Genbank/). Existing sequences included all members of the *Salvelinus, Oncorhynchus, Salmo,* and other putative genera and species that may have been the source for the unknown origin eggs. All embryo sequences were a 100% match to lake trout (*Salvelinus namaycush*) ITS-1 sequences previously published. The next closest match was arctic charr ITS-1 sequence with 95% base pairs matching our embryo sequences. Due to the results of the DNA sequencing, the eggs of unknown origin were determined to have been deposited by lake trout (*Salvelinus namaycush*).

Study Number: LM-06-13

Title: Use of Radiotelemetry to Assess Residency of Brown Bullheads in Presque Isle Bay, Lake Erie, Pennsylvania.

Principal Investigator: Mike Millard, Northeast Fishery Center (NEFC)

Co-Invest/Cooperators: David R. Smith, USGS, Leetown Science Center; Jim Grazio, PA DEP; Eric Obert, PA Sea grant, Erie, PA.

Background and Justification

In 1984, the USFWS began receiving reports from anglers of "tumorous" growths on brown bullhead catfish *(Ameiurus nebulosus)* caught in Presque Isle Bay. In response, USFWS conducted a field survey of Presque Isle Bay brown bullheads later that year. Forty-six (46) brown bullheads were collected, necropsied, and visually examined by agency biologists for the presence of internal and external tumors and other deformities. The results of this study revealed the presence of benign skin tumors on the mouth and sides of many of the bullheads, but no liver tumors were observed. In a more intensive follow-up survey in May of 1985, 93 brown bullheads were collected and necropsied for histopathological tumor analysis. Analyses showed an incidence rate of 11% oral neoplasms, 2.5% skin neoplasms, and 11% epidermal hyperplasms. Histopathological analysis failed to detect liver neoplasia. The PA Department of Environmental Protection, in partnership with the Erie County Department of Health, conducted its first investigation of the Presque Isle Bay brown bullheads in 1990 where 65 brown bullheads collected from PA Fish and Boat Commission (PFBC) trapnets showed an astonishing 86% tumor rate. A follow-up study by PADEP confirmed the presence of histologically-verified liver tumors in these fish.

Presque Isle Bay was listed as the 43rd Area of Concern by the US Department of State in January 1991. Subsequent to this listing, the Department became the lead agency for the investigation of the health of the brown bullhead population in the Bay. Since then, numerous studies have been conducte on this bullhead population. The most comprehensive study was conducted in 1991 and 1992 by Obert et al. The source of the contaminants which may be affecting the health of the brown bullheads in Presque Isle Bay needs to be identified. The hypothesis has been posed that brown bullhead migrate in and out of Presque Isle Bay through the roughly 300' wide by 2000' long entrance channel to the Bay. This channel is the only access/egress point to the otherwise closed Bay system. The implication of this hypothesis, if true, is profound for Presque Isle Bay and other AOCs with the "fish tumors or other deformities" beneficial use impairment.

Study Objectives

The objective of the study is to determine whether adult brown bullheads are predominantly resident within Presque Isle Bay. We are testing the hypothesis that adult bullheads captured within the Bay during spawning season (April/May) do not exit the Bay post-spawning, or within the next 6 months.

Materials and Methods

We used radiotelemetry to monitor the movements of adult brown bullhead in and around Presque Isle Bay. Fifty adult brown bullheads were captured in May 2006 and received surgically implanted coded radiotransmitters. We tagged fish captured from both within the Bay proper, at likely spawning sites, and just outside the Bay entrance channel. Fish were released near their site of initial capture. Remote radiotelemetry receivers with integrated dataloggers were strategically positioned around the Bay to detect movement of tags through the channel and near release sites. The receivers are continuously logging data throughout the 6 month project period, and data is being downloaded from the receivers at intervals of no more than 10 days. A portable receiver unit is also being used via boat to manually locate tagged fish within other areas of the Bay at various intervals throughout the summer.

Results (Fall/Winter 2006)

Project is ongoing and data are being collected and archived at this time.
Results should be available in winter of 2006.

Study Number: LM-06-14

Title: Effluent Management at Hatcheries through Nutrition

Principle investigators: Fish Technology Centers (FTC): Regions 1, 2, 5, 6, and USGS Northern Appalachian Research Laboratory

Background and Justification

The Environmental Protection Agency and state environmental agencies are developing new effluent standards and guidelines for aquaculture facilities. New approaches with treatment technologies and best management practices (BMPs) for reducing the discharge of total suspended solids (TSS) and excess feed will be required. This project proposes to develop and test feeds that will assist hatchery programs reach compliance with effluent standards through modification of metabolic wastes to reduce fecal friability and thereby assist in TSS and Phosphorus (P) removal from the water column.

Study Objective

Develop diet formulations which incorporate guar gum that result in low TSS and P levels entering receiving waters.

Methods and Materials

Three diets are to be used for each species tested. The modified New York State diet for trout and the Abernathy Dry diet for salmon (both relatively low in P, ~0.86%) will be formulated with and without guar gum additive and will be tested along with typical commercial diet used as control. Samples of all feeds will be taken for analyses. Each Technology Center will test rainbow trout for comparative purposes and a species of regional significance (Atlantic salmon, cutthroat trout, Gila trout, coho, and/or steelhead). Feeding trials will be conducted for 12 weeks using replicate tanks. Measures will include: fish growth; proximate and P composition of fish at study beginning and end; feces settling velocity and friability; and Phosphorus leaching rate from fecal material.

Results

Studies have progressed at varied rates according to Region. Feeding trials have been completed or are underway at Mora and Abernathy FTC. Lamar FTC has reared an appropriate number of Atlantic salmon and rainbow trout to conduct the trial and has ordered test diets form the Abernathy FTC and commercial providers. Additionally, the Lamar FTC has reached final stages of complete tank renovation for the Dissolved Gases Lab where studies will be performed. Final setup and commencement of trials is scheduled for early FY 2007.

OTHER BIOLOGICAL AND RELATED INVESTIGATIONS PERFORMED:

LM06A Long-term assessment of large woody debris addition to stream habitat and brook trout populations – Large woody debris (LWD) plays a critical role in structuring headwater stream habitat and several studies have shown positive correlations between the abundance of LWD and the abundance of brook trout. This study is an extension of the work conducted by Sweka and Hartman (2006) in which LWD was artificially added to eight streams in the Middle Fork Rive watershed, WV. Although they failed to see an increase in pool area or brook trout populations following LWD addition, their study only consisted of three years post-habitat manipulation assessment. It may take much longer for the added LWD to show it's full potential in enhancing stream habitat and brook trout populations. The goal of this study is to re-assess previously manipulated stream habitat and determine long-term effects (>6 years) on brook trout populations. *Contact : John Sweka*

LM06B Mussel Collection and Transport - Pat Farrell assisted personnel from the Ohio River Islands NWR, White Sulphur Springs National Fish Hatchery (WSSHFN) , Philadelphia EPA office, FWS ES office at State College, PA and West Virginia DNR in the collection and removal of mussels from under the old bridge across the Allegheny River at East Brady, PA. Divers brought collected mussels to the dock 2 or 3 times a day where they were sorted by species, counted, divided as to destination and tagged. About 1600 of the more than 4000 mussels collected were transported to WSSNFH. The 3 year project has collected and relocated about 15000 mussels from the bridge construction and demolition site, of which about 300 were threatened or endangered species. *Contact: Pat Farrell.*

LM06C Evaluation of de-gassing equipment replacement at North Attleboro National Fish Hatchery - Pat Farrell and Tom Bryerton responded to a request from the regional maintenance coordinator to evaluate the feasibility of service employees performing a de-gasser & ceiling replacement at the North Attleboro National Fish Hatchery, MA. If the de-gassing unit can be delivered by 1 Oct it would be possible to have service employees complete the replacement in time to keep their egg incubation activities on schedule. This would save a considerable amount of construction dollars over that of hiring contractors. *Contact: Tom Bryerton*

LM06D Partnership with the Pennsylvania Fish and Boat Commission for raising adult brook and rainbow trout - A Memorandum of Agreement has been established between the Pennsylvania Fish and Boat Commission and the NEFC to raise 38,000 brook trout and 7,000 rainbow trout from year class 2005, and 60,000 rainbow trout from year class 2006. These fish will be stocked in waters of the Commonwealth of Pennsylvania in the spring of 2007, with an emphasis on stocking waters that flow through Federal lands. *Contact: Steve Davis*

LM06E Coded Wire Tagging of Lake Trout – From April 3 – 12, 2006, the Fish Technology Center assisted the Allegheny National Fish Hatchery and the New York Department of Environmental Conservation, with the coded wire tagging of 120,000 fingerling lake trout for release into Lake Ontario. The Fish Technology Center also assisted the Allegheny National Fish Hatchery with improvements to a coded wire tagging trailer. *Contact: Steve Davis*

LM06F Genetic characterization and marking of Merrimack River Atlantic salmon.- Atlantic salmon were extirpated from the Merrimack River in the mid-1800's when hydropower dams blocked salmon from returning to spawning habitat. The objective of this study is to determine effectiveness of the hatchery stocking/breeding program on the Merrimack. This project characterized sea run broodstock, kelt broodstock, and returning adults. Parentage analysis will be used to identify parents of returning adults, which will allow determination of parental source (sea-run or kelt), and stocking location of the family group to evaluate stocking habitat on the survival to adult stage. Samples have been obtained from the broodstock, and genotyped. Return adults from the 2005 run in the Merrimack were obtained and will be analyzed as part of this study which is in conjunction with Nashua National Fish Hatchery - NH. The project is ongoing. *Contact: Meredith Bartron*

OTHER BIOLOGICAL AND RELATED INVESTIGATIONS PERFORMED: (cont.)

LM06G Genetic characterization of "wild" Penobscot River Atlantic salmon. – Atlantic salmon that are "wild" can either be the product of natural spawning by adult salmon, or result from stocking as fry from hatchery-spawned adults. A small number of wild adults returning to Veazie Dam on the Penobscot River, and passed upstream (so therefore not previously genotyped as part of broodstock management efforts) were identified as of wild origin by Maine Atlantic Salmon Commission. If these individuals are the result of fry stocking, their parentage could be determined due to the known paired matings for all hatchery-spawned Penobscot adults. If the product of river spawning, then their parentage could not be determined because their parents would be unknown. The FWS Region 5 Conservation Genetics Lab is conducting the analysis of these fish for the Maine ASC as part of their management efforts, and represents an annual assessment by the lab. *Contact: Meredith Bartron*

LM06H Application of calcein as a dietary component for fish marking to enhance product evaluation and management capabilities. – 2006 represents the second year of a 3-year Science Support Partnership Program project with partners from the U.S.G.S. Leetown Science Center Northern Appalachian Research Laboratory (NARL), U.S.F.W.S. Aquatic Animal Drug Approval Partnership, Northeast Fishery Center (NEFC), and Bozeman Fish Technology Center. Recently, calcein has been approved as an Investigative New Animal Drug via immersion delivery on fish weighting less than 2 grams. However, these weight and delivery restrictions make it impractical for some research and fish management situations; thus, warranting the investigation of other forms of delivery. Long-term brook and lake trout studies were initiated using extruded feed containing powdered and liposome encapsulated calcein as alternate delivery methods at the NARL in Wellsboro, Pennsylvania. Also, a long-term Atlantic salmon study was initiated at the NEFC in Lamar, Pennsylvania using the identical delivery methods. Fish from each long-term study will be collected and their scales analyzed for luminosity on fifteen occasions over the next thirty-six months. Preliminary results indicate scale luminosity is greater in fish fed powdered calcein than liposome encapsulated calcein. Striped bass are scheduled for a long-term calcein study this fall at the NARL. Bluegill and rainbow trout long-term calcein studies are scheduled for this winter at the NEFC. This study is ongoing. *Contact: John Fletcher or Tom Kehler.*

LM06I Removal of phosphorus using pelletized acid mine drainage sludge. This study was initiated in 2005 and represents a collaborative endeavor between the U.S.G.S. Leetown Science Center and the Northeast Fishery Center. Phosphorus is usually the critical limiting nutrient in aquatic systems. Excessive phosphorus inputs can contribute to eutrophication causing alterations in the system's chemical and biological components. Phosphorus release from fish production facilities is a concern that environmental managers are addressing. The objective of this study is to determine the effectiveness of pelletized acid mine drainage sludge (AMDS) for phosphorus removal from the effluent of a fish production unit. Thirty-six kilograms of rainbow trout were reared in a 2.0 meter fiberglass tank at the Northeast Fishery Center, Lamar, Pennsylvania. Trout were fed 0.5% of their bodyweight per day using automatic feeders and given supplemental oxygen. Half of the tank's effluent (3.8 liters) was passed alternately through two columns containing AMDS. Water samples were collected twice a day, two days week from the inflow, discharging column, and tank effluent and analyzed using a spectrophotometer. Compressor failure caused the premature termination of this study on March 31, 2006. From January 3, to March 30, 2006, (83 days of operation) AMDS in columns 1 and 2 collectively removed a phosphorus average of 37%. This study is scheduled to resume in winter 2006. *Contact: John Fletcher or Tom Kehler*

LM06J Partnership with the Pennsylvania Fish and Boat Commission for pond culture of juvenile walleye and striped bass - A Memorandum of Understanding established between the Pennsylvania Fish and Boat Commission and the Service in 2003 to provide use of five Northeast Fishery Center ponds for culture resulted in the production of 47,000 striped bass Phase I fingerlings for the Susquehanna River in 2006. *Contact: John Fletcher*

OTHER BIOLOGICAL AND RELATED INVESTIGATIONS PERFORMED: (continued)

LM06K Design of American Shad (AMS) Culture System for Nashua NFH - The Northeast Fishery Center designed a shad culture system laid out to receive broodstock from the Merrimack River, induce tank spawning via hormone implant, collect and incubate eggs, and rear and mark shad fry prior to release. Features included primary and secondary heat pumps, heat exchangers, tempering boxes, degassing columns, incubation jars, 5 fry rearing and transport tanks, and two 12 ft. diameter broodstock spawning tanks with low salinity (1-2 ppt) with one exchange per day recirculating flow. Nashua NFH constructed and brought the system on line within a 90 day period and produced 1.8 million fry in their initial production season. *Contact: John Fletcher*

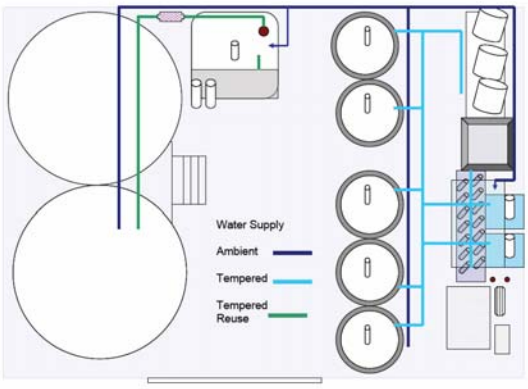

Nashua NFH AMS

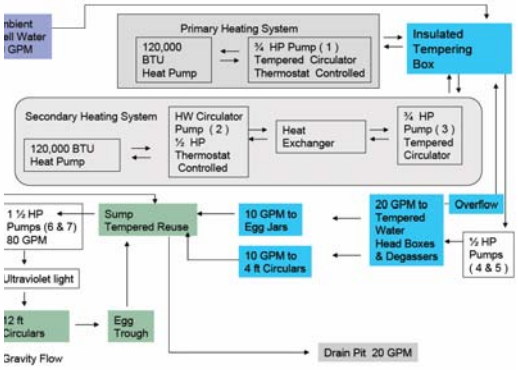

Flow Diagram Nashua NFH AMS Culture System

LM06L Rehabilitation & design of Lamar Fish Technology Center serial reuse raceway system A detailed design and review of construction plans to remediate and update Lamar's A and B series raceways (2 sets of 5 typical 8 ft. by 100 ft. concrete raceways side by side) was accomplished with Region 5 Contracting and Engineering, The Conservation Fund Freshwater Institute, and STV Architects. Primary elements include: 1) conversion of four typical raceways into four mixed cell rectangular rearing units (12 sections per raceway - 8 ft. x 8 ft.); 2) modification of two additional raceways into one large mixed cell unit (5 sections measuring 17 ft x 17 ft.); 3) installation of 12 thirteen foot diameter Cornel Type Dual drain tanks in the remaining 200 foot of raceway area; and 4) construction of new 2,500 gpm pump station with Low Head Oxygen injection and micro-sieve filtration. Design criteria will allow future operation of the system in gravity flow serial reuse or pumped mixed cell / circular tank mode. With these changes, the FTC will be able to demonstrate new effluent sequestering and waste removal technology and conduct replicated culture studies on production scale. *Contact: John Fletcher.*

OTHER BIOLOGICAL AND RELATED INVESTIGATIONS PERFORMED (continued):

LM06M Fish Health Inspection/Monitoring/Diagnostic Services - The Lamar Fish Health Center processed 369 laboratory cases in fiscal year 2006. Region 5 has a very extensive fish health monitoring program to enhance the fish health inspections, allowing continual surveillance of the health status of the stocks, some of which have been identified as very limited distinct population segments (DPS) which the Service has listed under the Endangered Species Act (ESA). This surveillance consists of screening mortalities for parasites, bacteria, and viruses, and accounted for over 250 fish tested from five Service broodstock facilities throughout the entire year. Another strategy that enhances the screening of Service stocks is the collection and testing of spawning products for those pathogens that are vertically transmitted (passed on to offspring). In fiscal year 2006, reproductive fluids from over 2200 fish spawned at nine Service facilities and two partnering fish hatcheries were examined. The Fish Health Center had 33 lot by lot fish health inspection cases. These are conducted to allow interstate transfer as well as release of fish. Fifteen federal (or cooperating with a federal program) facilities received these on-site statistically based investigations and another 17 were conducted, as outlined in the Service Fish Health Policy, as virology lab services only for non-Service entities. These examinations are essential to prevent the spread of fish diseases through fish and/or egg transfers and are necessary to enable facilities to comply with regulations on transporting and releasing fish. In addition to the 139 monitoring cases involving examination of fish, 2 Service facilities provided 76 water monitoring cases, where water from rearing units was examined by the water filtration method, a very effective proactive protocol for diagnosing furunculosis before an epizootic occurs. In fiscal year 2006, twenty six laboratory cases were diagnostic exams from 6 facility/agencies, where moribund fish were examined and tested to determine the cause(s) of mortalities and other problems and recommendations for resolution were provided. In some diagnostic cases, protozoan parasites and bacterial pathogens were identified and proper control treatments were recommended. *Contact: John Coll*

LMO6N Participation in the National Wild Fish Health Survey.- This project, launched in 1997, continues to involve all nine Service Fish Health Centers nationwide, incorporating standardized diagnostic techniques and data management methods to ensure comparability. In fiscal year 2006, the Lamar Fish Health Center initiated 69 cases for the Survey, in which over 400 fish (32 different species) from a total of 75 sites were examined and efforts continued to enter completed cases into the NWFHS database. Species of major interest this year included Atlantic salmon, brook trout, and brown trout for management programs; and largemouth bass, smallmouth bass, redbreasted sunfish, and pumpkinseeds for prevalence of largemouth bass virus (LMBV). The National Wild Fish Health Survey Database which is capable of single and double queries based on either fish species or fish pathogens, is now accessible via the internet on the Service website. The National Wild Fish Health Survey is partnership driven and fiscal year 2006 enabled the Lamar Fish Health Unit to conduct cooperative work with West Virginia Department of Natural Resources, Vermont Fish and Wildlife Department, West Virginia dept of Natural Resources, and the Pennsylvania Fish and Boat Commission on assessing the prevalence of largemouth bass virus in bass residents of several bodies of water. Outreach activities to increase awareness of the National Wild Fish Health Survey and involve other Service and partnering programs continue. *Contact: John Coll*

OTHER BIOLOGICAL AND RELATED INVESTIGATIONS PERFORMED: (continued)

LM06O Incidence and Prevalence of Infectious Salmon Anemia virus (ISAv) in Sea Run Atlantic salmon held at Service NFHs as Broodstock. –The non-lethal ISAv surveillance protocol for screening sea-run Penobscot River Atlantic salmon as they are captured and brought to U.S. Fish and Wildlife National Fish Hatcheries to determine incidence was continued in 2006. At Craig Brook NFH in Maine, a sub-sample (60) of fish were sampled non-lethally (blood)and tested by reverse transcriptase-polymerase chain Reaction (RT- PCR) and cell culture on SHK-1 and ASK cells. All fish tested negative by both PCR and cell culture techniques. As a tool for managing this virus at the facility, the entire population (n=537) was similarly screened, following cohabitation and prior to spawning. The Connecticut River sea-run Atlantic salmon broodstock held at Cronin National Salmon Station in MA (n=163) and Merrimack River stock held at Nashua NFH (n= 85) were also non-lethally screened for ISAv. *Contact: John Coll*

LM06P Fish Health Extension Services -The Lamar Fish Health Center continues to provide extension services to all federal, state, tribal and private inquiries in the area of fish health. Services provided include technical consultations, provision of supplies for fish necropsies, treatment recommendations and calculations, antibiotic injections, vaccinations, development of biosecurity plans, review of international and interstate fish importations, and furnishing procedural protocols**.** Participation within the Service's National Investigational New Animal Drug program administered by the Aquatic Animal Drug Approval Partnership (AADAP) Program in Bozeman is an integral requirement for providing treatment recommendations that are both safe and effective, and thereby approved by U.S. Food and Drug Administration. *Contact: John Coll*

LM06Q U.S. Fish and Wildlife Service Title 50 Revision Committee - The Lamar Fish Health Center continued in the Service-wide effort to revise the Service's national importation regulations for fish, egg, and gamete importation, 50CFR16.13. Work will be cooperative with the newly developed National Aquatic Animal Task Force (NAAHTF) established through the Joint Sub-committee on Aquaculture (JSA). *Contact: John Coll*

LM06R Vaccination of pre-release Connecticut River smolts using multi-valent vaccine – The Lamar Fish Health Center, in cooperation with partners involved with the Connecticut River Atlantic Salmon Committee, coordinated and administered injectable vaccine to 75,000 Atlantic salmon smolts the Pittsford NFH in 2006. This is the fifth year of administering this vaccine. The vaccine will protect the fish during their stay at the hatchery, as well as up to a year after they are released into the river from the bacterial pathogens that cause furunculosis and vibriosis. Evaluation of the efficacy of the vaccine in improving salmon survival in the wild will be based on adult sea run returns. *Contact: John Coll*

U.S. Department of the Interior
U.S. Fish and Wildlife Service
N.E. Fishery Center - Lamar, PA
570.726.4247