AVIAN PROTECTION PLAN (APP) GUIDELINES

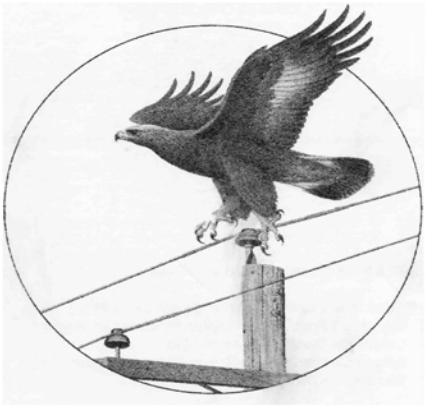

A Joint Document Prepared By

The Edison Electric Institute's Avian Power Line Interaction Committee (APLIC)

and

U.S. Fish and Wildlife Service (USFWS)

April 2005

ACKNOWLEDGEMENT

APLIC and the U.S. Fish and Wildlife Service (Service) have a long history of cooperation and collaboration on avian issues. Like the Service, current APLIC member utilities want to do their part to minimize adverse impacts to protected avian species on power lines. The public expects utilities to deliver cost-effective reliable energy and the Service to protect and enhance trust resources. Working in a partnership to benefit both the birds and the electric utility industry, the voluntary Avian Protection Plan (APP) Guidelines were developed in a joint, collaborative way.

It is the hope of both APLIC and the Service that individual utilities will utilize the voluntary principles in this document to develop an APP specific to their needs, which improves reliability and avian conservation. APPs offer the industry an additional option, one that is voluntary and without the need for formal Service concurrence, to address avian electrocutions and collisions. Utilities are also encouraged to work in partnership with Federal and State resource agencies when developing and implementing their voluntary APPs.

APLIC and the Service would like to acknowledge the efforts of those individuals responsible for the development of these voluntary guidelines. These guidelines demonstrate that through ongoing collaborative efforts the Service and industry can work together to meet energy needs while acting as responsible stewards to the environment.

April 14, 2005

_____
Paul Schmidt, Assistant Director Migratory Birds
US Fish and Wildlife Service

_____
Jim Lindsay, APLIC Chairman

_____
Quinlan J. Shea, III Executive Director Environment
Edison Electric Institute

_____
Jim Burruss, Past APLIC Chairman

_____
John W. Holt
National Rural Electric Cooperative Association

The APP Guidelines presented in this document are intended to serve as a "tool box" from which a utility can select and tailor components applicable to its specific needs. These guidelines are intended to be used in conjunction with APLIC's *Suggested Practices for Raptor Protection on Power Lines: The State of the Art in 1996* and *Mitigating Bird Collisions with Power Lines: The State of the Art in 1994*, or the most current editions of these documents, which contain more detail on construction design standards and line siting recommendations.

These "guidelines" are being distributed electronically. While the introductory pages of the document are printed, the remainder of this "tool box" is electronic. This is a dynamic document and will be periodically updated as new information and resources become available. Additional copies of the APP Guidelines and current information on related issues can be downloaded from the Avian Power Line Interaction Committee (APLIC) (http://aplic.org) and Edison Electric Institute (EEI) (http://eei.org) websites. In addition, the *Suggested Practices for Raptor Protection on Power Lines* and *Mitigating Bird Collisions with Power Lines* manuals can be obtained from APLIC or EEI.

Editor's note: Although this draft is being distributed in paper format, the final version will be distributed electronically as described above.

TABLE OF CONTENTS

I. Introduction 1
II. Background 7
III. Applicable Regulations 13
IV. APP Principles 16
Corporate Policy 17
Training 20
Permit Compliance 27
Construction Design Standards 30
Nest Management 43
Avian Reporting System 46
Risk Assessment Methodology 54
Mortality Reduction Measures 59
Avian Enhancement Options 62
Quality Control 64
Public Awareness 65
Key Resources 66
V. List of Acronyms 84

I. INTRODUCTION

Since the formation of the Avian Power Line Interaction Committee (APLIC) in 1989, the electric utility industry and the U.S. Fish and Wildlife Service (USFWS) have worked together to reduce avian electrocution and collision mortality. This has resulted in the cooperative development of guidelines for Avian Protection Plans (APP) by APLIC and USFWS, representing another milestone in avian conservation. The principles presented in these voluntary guidelines are intended to allow utilities to tailor an APP that will best fit their needs while furthering the conservation of avian species and improving reliability and customer service. A utility that implements the principles contained in these APP guidelines will greatly reduce avian risk as well its own risk of enforcement under the Migratory Bird Treaty Act (MBTA). Development and implementation of an APP makes good business sense because animal- and bird-caused outages are costly. A utility that creates an APP following these guidelines and that addresses their specific avian issues can benefit through regulatory compliance, reliability improvements, cost savings and positive recognition from regulators and customers.

What is an Avian Protection Plan?

An Avian Protection Plan is a utility-specific document that delineates a program designed to reduce the operational and avian risks that result from avian interactions with electric utility facilities. Although each utility's APP will be different, the overall goal of any APP should be to reduce avian mortality. This document provides guiding principles and examples to aid utilities in their development of an APP. Although not all of these elements need to be included in every APP because of the specific circumstances of a utility or geographical area, they represent an overview of elements that should be considered for inclusion in an APP and that individual utilities may find helpful in crafting their own, individually-tailored APPs.

Principles of an Avian Protection Plan

1. *Corporate Policy*

An APP typically includes a statement of company policy confirming the company's commitment to work cooperatively towards the protection of migratory birds. This may include a commitment by the company to balance its goal of providing reliable electrical service in a cost-effective manner with the regulatory requirements protecting avian species, as well as the need to obtain and comply with all necessary permits, monitor incidents of avian mortality, and make reasonable efforts to construct and alter infrastructure to reduce the incidence of avian mortality.

2. *Training*

Training is an important element of an APP. All appropriate utility personnel, including managers, supervisors, line crews, engineering, dispatch, and design personnel, should be properly trained in avian issues. This training should encompass the reasons, need, and method by which employees should report an avian mortality, follow nest management protocols, dispose of carcasses, and comply with applicable regulations, including the consequences of non-compliance. Supplemental training also may be appropriate where there are material changes in regulations, permit conditions, or internal policies. APLIC-sponsored "short courses" on avian electrocution, collision, and nest issues are conducted annually throughout the U.S. In addition, a two-hour overview presentation of avian issues that can be used for internal company training is available from APLIC (see http://aplic.org).

3. *Permit Compliance*

An APP can identify the process under which a company obtains and complies with all necessary permits related to avian issues. Particular attention should be given to specific activities that can require take permits including, but not limited

to, nest relocation, temporary possession, depredation, salvage/disposal, and scientific collection.

4. *Construction Design Standards*

Avian interactions with facilities can cause outages or system reliability issues. To improve system reliability, avian interactions should be considered in the design and installation of new facilities, as well as the operation and maintenance of existing facilities. For those reasons, inclusion of accepted construction standards for both new and retrofit techniques also should be included in an APP. Companies can either rely upon existing construction configurations recommended by APLIC (see *Suggested Practices for Raptor Protection on Power Lines: The State of the Art in 1996* and *Mitigating Bird Collisions with Power Lines: The State of the Art in 1994*, or the most current editions of these documents) or may choose to instead develop their own internal construction standards that meet or exceed these guidelines. These standards should be used in areas where new construction should be avian-safe, as well as where existing infrastructure should be retrofitted to provide avian safety.

5. *Nest Management*

An APP may include procedures for nest management on utility structures. These procedures should be explained to company employees during training to ensure uniform treatment of avian nest issues among personnel.

6. *Avian Reporting System*

Although reporting of avian mortalities may be required as a condition of Federal or State permits, a utility may also choose to voluntarily monitor relevant avian interactions, including mortalities, through the development of an internal reporting system. An APP should consider providing for the development of such a reporting system, which can help a company pinpoint areas of concern by tracking both the specific locations where mortalities may be occurring, as well as

the extent of such mortalities. Data collected by company personnel can be limited to avian mortalities or injuries, or could be expanded to include historical tracking of avian nest problems, particularly problematic poles or line configurations, as well as remedial actions taken. All data should be regularly entered into a searchable database compatible for use in additional analysis (see Risk Assessment Methodology below). Bird Mortality Tracking System software developed by APLIC is available for free upon request at http://aplic.org.

7. *Risk Assessment Methodology*

A utility can have the greatest impact on reducing avian mortality by focusing its efforts in a cost-effective manner on the areas that pose the greatest risk to migratory birds. Therefore, as a general matter, an APP should include a method for evaluating the risks posed to migratory birds in a manner that identifies areas and issues of particular concern. A risk assessment study will often begin with an assessment of available data addressing areas of high avian use, avian mortality, nesting problems, established flyways, adjacent wetlands, prey populations, perch availability, effectiveness of existing procedures, remedial actions and other factors that can increase avian interactions with utility facilities. The avian reporting system discussed in the previous section is an integral component of this risk assessment, as well as the use of avian experts, birders, and biologists who can provide additional information on avian distribution. An APP also may provide for the development of models that will enable a company to utilize biological and electrical design information to prioritize poles most in need of modifications, as well as research on the varied causes of avian mortality and the benefits of utility structures to avian species.

8. *Mortality Reduction Measures*

After completing a risk assessment, a company can focus its efforts on areas of concern, ensure that the activities taken by the utility are not out of proportion to the risks encountered by migratory birds, and then determine whether an avian

mortality reduction plan needs to be implemented in certain areas. An APP could implement this approach by developing such a risk reduction plan, utilizing risk assessment results to direct where system monitoring should occur, where retrofit efforts should be focused, and where new construction warrants special attention to raptor and other bird issues. If a utility finds that implementation of such avian protection measures is appropriate, it also may choose to develop a schedule for implementation.

9. *Avian Enhancement Options*

In addition to taking steps to reduce mortality risk to avian species, an APP also may include opportunities for a utility to enhance avian populations or habitat, including developing nest platforms, managing habitats to benefit migratory birds, or working cooperatively with agencies or organizations in such efforts. Where feasible, such proactive development of new ideas and methods to protect migratory birds should be encouraged and explored.

10. *Quality Control*

An APP also may include a mechanism to review existing practices, ensuring quality control. For instance, a utility may conduct an independent assessment of its avian reporting system to ensure its effectiveness, or invest in research on the effectiveness of different techniques and technologies used to prevent collisions, electrocutions and problem nests.

11. *Public Awareness*

An APP generally should include a method to educate the public about the avian electrocution issue, the company's avian protection program, as well as its successes in avian protection.

12. *Key Resources*

An APP should identify key resources to address avian protection issues including, for example, a list of experts who may be called upon to aid in resolving avian issues. These could include consultants, State and Federal resource agencies, universities, or conservation groups. Engineers may find that internal personnel such as environmental specialists can aid in developing creative solutions to resolve avian interaction problems, and external organizations like APLIC can also serve as helpful resources by providing guidance, workshops, materials, and contacts. An understanding of raptor and other bird behavior can influence how and when avian protection should be utilized, and an APP that connects avian experts with utility decision-makers may reduce the risk of avian incidents and improve system reliability.

II. BACKGROUND

Historical Perspective

Utility poles can benefit raptors by providing perching and/or nesting structures in areas where few natural perches or nest sites exist. However, utility structures can also pose a threat to raptors and other birds through electrocutions or collisions. Although records of electrocutions and collisions date back as early as the late 19th century, avian deaths associated with power lines were not a widespread concern until the 1970's when surveys in the western United States found hundreds of eagles shot, poisoned, and electrocuted in rural areas. Throughout the 1970's, agencies and organizations such as the Rural Electrification Association (now the Rural Utilities Service), USFWS , Edison Electric Institute (EEI), and the National Audubon Society worked together to track raptor electrocutions, identify high risk configurations, and develop methods to reduce electrocutions. In 1989, biologists from the utility industry, USFWS, and the National Audubon Society formed APLIC, initially to address collision issues of sandhill and whooping cranes. The scope of APLIC's mission later expanded to include electrocution and nest issues.

APLIC now serves as a clearinghouse for information and communication on avian/power line issues. Its membership includes electric utilities, EEI, Electric Power Research Institute (EPRI), the National Rural Electric Cooperative Association (NRECA), Rural Utilities Service (RUS) and USFWS. APLIC has produced manuals for addressing electrocutions (*Suggested Practices for Raptor Protection on Power Lines: The State of the Art in 1996*) as well as collisions (*Mitigating Bird Collisions with Power Lines: The State of the Art in 1994*). In addition, APLIC produces videos addressing collisions and electrocutions; offers a short course overview of collision, electrocution, and nest issues; and funds bird/power line-related research. The APP guidelines provided in this document represent a multidisciplinary culmination of several decades of research, field testing, monitoring and assessment to minimize avian mortality associated with utility structures. APLIC encourages the development of APPs as they benefit utilities and wildlife resources through reduced long-term costs, improved reliability, avian

protection, legal compliance, and positive relations between regulatory agencies and customers.

How Electrocution Occurs

Birds are electrocuted by power lines because of two seemingly unrelated, yet interactive factors:

1. Environmental factors such as topography, vegetation, available prey and other, behavioral or biological factors influence avian use of power poles.
2. Inadequate seperation between energized conductors or energized conductors and grounded hardware can provide two points of contact.

Electrocution can occur when a bird completes an electric circuit by simultaneously touching two energized parts or an energized part and a grounded part of the electrical equipment. Most electrocutions occur on medium-voltage distribution lines (4 to 34.5 kilovolts [kV]), in which the spacing between conductors may be small enough to be bridged by birds. Poles with energized hardware, such as transformers, can be especially hazardous, even to small birds, as they contain numerous, closely-spaced energized parts.

"Avian-safe" structures are those that provide adequate clearances to accommodate a large bird between energized and/or grounded parts. Consequently, 60 inches of horizontal separation, which can accommodate the wrist-to-wrist distance of an eagle (which is approximately 54 inches), is used as the standard for raptor protection (Figure 1). Likewise, vertical separation of at least 48 inches can accommodate the height of an eagle from its feet to the top of its head (which is approximately 31 inches; Figure 2). In particular areas (*i.e*. areas with concentrations of wading birds), vertical separation may need to be increased to 60 inches. Because dry feathers act as insulation, contact must be made between fleshy parts, such as the wrists, feet, or other skin, for electrocution to occur. In spite of the best efforts to minimize avian electrocutions, some degree of mortality may always occur due to influences that cannot be controlled, *e.g.* weather.

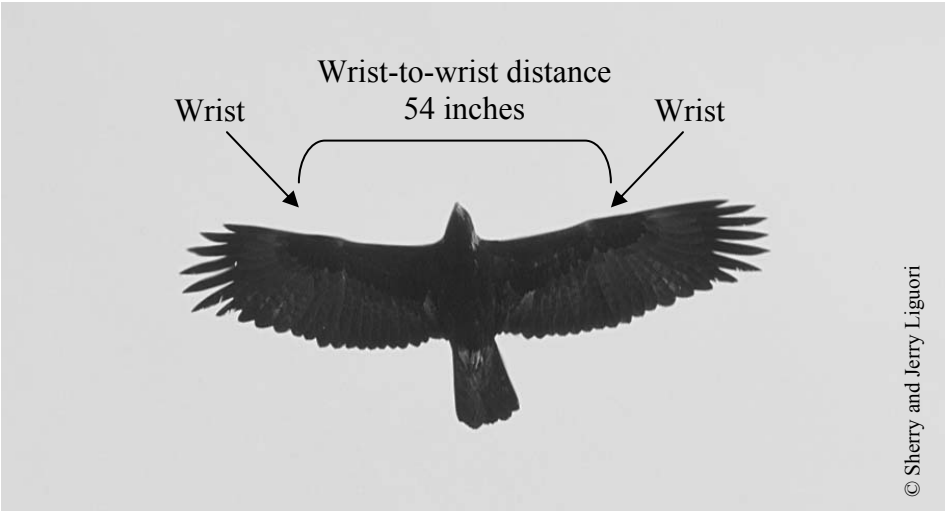

Figure 1. Wrist-to-wrist distance of an eagle.

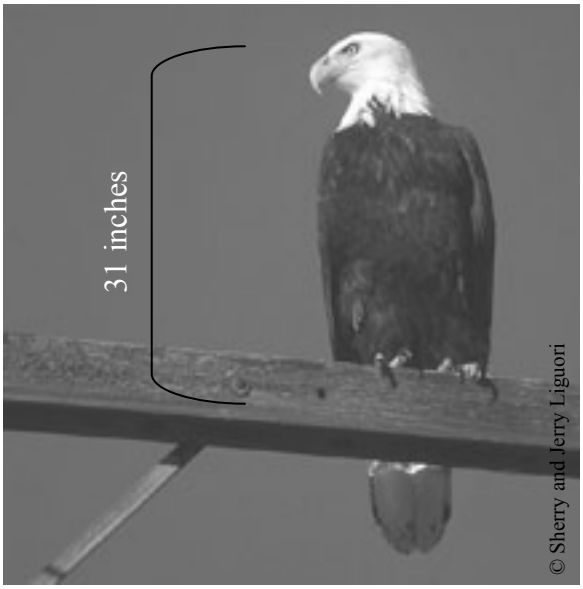

Figure 2. Head to foot distance of an eagle.

Raptors are opportunistic and may use power poles for a number of purposes, such as nest sites, high points from which to defend territories, and perches from which to hunt. "Still hunting" from a perch is energy efficient for a bird, provided that good prey habitat is within view. Some structures are preferred by birds because they provide considerable elevation above the surrounding terrain, thereby offering a wide field of

view. Identification and modification of these "preferred" structures may greatly reduce or minimize the electrocution risk on an entire line. However, in areas where lines run through homogeneous terrain, there is no apparent advantage of some poles over others. Favored perches can be identified by examining crossarms and the ground beneath them for whitewash (feces accumulations), pellets, or prey remains. Since birds such as hawks and owls cannot digest the fur, feathers, and bones of their prey, they regurgitate these parts in the form of a "pellet" or "casting."

What Species are at Risk

Electrocution has been documented as the cause of death in many raptor species in the United States, although large, open-country birds, such as eagles and buteos, are typically at greatest risk. In open habitats where few natural perches exist, such as deserts, grasslands, agricultural fields, and pastures, raptors are attracted to power poles, which provide roosting and nesting sites as well as hunting perches. The large wingspans of raptors such as golden eagles, red-tailed hawks, osprey, and great horned owls enable them to simultaneously touch energized and/or grounded parts, potentially resulting in electrocution. Although raptors are most often considered when addressing electrocution risk, other birds such as crows, ravens, magpies, small flocking birds and wading birds can also be electrocuted. Closely-spaced exposed equipment, such as jumper wires on transformers, can pose an electrocution risk to small birds such as magpies or jays. Wading birds, such as herons, egrets, ibis, or storks, may require increased vertical spacing between lines, as they may exceed 40 inches in height.

Factors Influencing Collisions

Factors that influence collision risk can be divided into three categories: those related to avian species, those related to the environment, and those related to the configuration and location of lines. Species-related factors include habitat use, body size, flight behavior, age, sex, and flocking behavior. Heavy-bodied, less agile birds or birds within large flocks may lack the ability to quickly negotiate obstacles, making them more likely to collide with overhead lines. Likewise, inexperienced birds as well as those

distracted by territorial or courtship activities may collide with lines. Environmental factors influencing collision risk include the effects of weather and time of day on line visibility, surrounding land use practices that may attract birds, and human activities that may flush birds into lines. Line-related factors influencing collision risk include the configuration and location of the line and line placement with respect to other structures or topographic features. Collisions often occur with the overhead static wire, which may be less visible than the other wires due to its smaller diameter.

Why Protect Birds?

All migratory birds in North America are protected under the Migratory Bird Treaty Act of 1918, as amended. In addition, both North American eagle species are protected under the Bald and Golden Eagle Protection Act (BGEPA), as amended. These laws provide civil and criminal penalties for the "take" of such species. "Take" under MBTA is defined as to "pursue, hunt, shoot, wound, kill, trap, capture, or collect, or to attempt any of these acts." Take under BGEPA is defined as to "pursue, shoot, shoot at, poison, wound, kill, capture, trap, collect, molest or disturb." The bald eagle is also currently (April 2005) listed as threatened under the Endangered Species Act in the contiguous 48 states.

Power line electrocutions are a cause of mortality for raptors, eagles and other migratory birds. These deaths, many of which could be avoided by making relatively inexpensive modifications to existing power lines and poles, can cause power outages that inconvenience customers, spark grass and forest fires, and result in lost revenue and other costs to utilities.

Government agencies, conservation organizations, and the general public are concerned about avian safety. Industry and the public expect reliable electric service. These concerns and expectations have generated great public demand for both higher service reliability and better protection of avian populations and their habitats.

The electric power industry has long been aware that closely-spaced electric conductors, separated by a horizontal crossarm, can result in the electrocution of raptors and other birds. Thirty years ago, electric companies, USFWS, and interested non-

governmental organizations developed the first edition of *Suggested Practices for Raptor Protection on Power Lines*, which detailed how to reduce or eliminate the risk of avian electrocutions. Since the first *Suggested Practices*, utilities and agencies have worked cooperatively to identify electrocution and collision risks and improve the technology and methods used for reducing such risks.

The development of APPs by electric utilities will represent the continuation of an approach that emphasizes long-term proactive conservation partnerships between the utility industry, the conservation community, and USFWS. These voluntary plans will provide a framework for addressing electrocution hazards, committing utilities to evaluate their power lines and work with USFWS to conserve federally protected migratory birds.

III. APPLICABLE REGULATIONS

The Migratory Bird Treaty Act (16 U.S.C. 703-712; MBTA), which is administered by USFWS, is the cornerstone of migratory bird conservation and protection in the United States. The MBTA implements four treaties that provide for international protection of migratory birds. It is a strict liability statute wherein proof of intent is not an element of a taking violation. Wording is clear in that most actions that result in a "taking" or possession (permanent or temporary) of a protected species can be a violation.

Specifically, the MBTA states: "Unless and except as permitted by regulations … it shall be unlawful at any time, by any means, or in any manner to pursue, hunt, take, capture, kill … possess, offer for sale, sell … purchase … ship, export, import … transport or cause to be transported … any migratory bird, any part, nest, or eggs of any such bird … (The Act) prohibits the taking, killing, possession, transportation, and importation of migratory birds, their eggs, parts, and nests, except when specifically authorized by the Department of the Interior." The word "take" is defined as "to pursue, hunt, shoot, wound, kill, trap, capture, or collect, or attempt to pursue, hunt, shoot, wound, kill, trap, capture, or collect."

A 1972 amendment to the MBTA resulted in inclusion of bald eagles and other birds of prey in the definition of a migratory bird. The MBTA provides criminal penalties for persons who, by any means or in any manner, pursue, hunt, take, capture, kill, attempt to take, capture, or kill, possess, offer for sale, sell, offer to barter, barter, offer to purchase, purchase, deliver for shipment, ship, export, import, cause to be shipped, exported, or imported, deliver for transportation, transport or cause to be transported, carry or cause to be carried, or receive for shipment, transportation, carriage, or export, any migratory bird. The MBTA offers protection to 836 species of migratory birds, including waterfowl, shorebirds, seabirds, wading birds, raptors, and passerines. Generally speaking, the MBTA protects all birds occurring in the U.S. in the wild except for house (English) sparrows, European starlings, rock doves (pigeons), any recently listed unprotected species in the Federal Register and non-migratory upland game birds.

For a complete list of species protected under the MBTA see http://migratorybirds.fws.gov/intrnltr/mbta/mbtintro.html.

A violation of the MBTA by an individual can result in a fine of up to $15,000 and/or imprisonment for up to six months for a misdemeanor, and up to $250,000 and/or imprisonment for up to two years for a felony. Fines may be doubled for organizations. Penalties increase greatly for offenses involving commercialization and/or the sale of migratory birds and/or their parts.

Under authority of the **Bald and Golden Eagle Protection Act** (16 U.S.C. 668-668d; BGEPA), bald and golden eagles are afforded additional legal protection. Penalties for the "take" of an eagle may result in a fine of up to $100,000 and/or imprisonment for up to one year. The BGEPA has additional provisions wherein the case of a second or subsequent conviction of the BGEPA, penalties may be imposed of up to $250,000 fine and/or two years imprisonment.

The **Endangered Species Act** (16 U.S.C. 1531-1544; ESA) was passed by Congress in 1973 in recognition that many of our Nation's native plants and animals were in danger of becoming extinct. The purposes of the Act are to protect these endangered and threatened species and to provide a means to conserve their ecosystems. To this end, Federal agencies are directed to utilize their authorities to conserve listed species, and make sure that their actions do not jeopardize the continued existence of these species. Federal agencies are encouraged to do the same with respect to "candidate" species which may be listed in the near future. The law is administered by USFWS and the Commerce Department's National Marine Fisheries Service (NMFS). USFWS has primary responsibility for terrestrial and freshwater organisms, while NMFS has responsibility for marine species such as whales and salmon. These two agencies work with other agencies to plan or modify Federal projects so that they will have minimal impact on listed species and their habitats. Protection of species is also achieved through partnerships with the States, with Federal financial assistance and a system of incentives available to encourage State participation. USFWS also works with private landowners, providing financial and technical assistance for management actions on their lands to benefit both listed and non-listed species.

Section 9 of the ESA makes it unlawful for a person to "take" a listed species. Take is defined as ". . . to harass, harm, pursue, hunt, shoot, wound, kill, trap, capture, or collect or attempt to engage in any such conduct." The Secretary of the Interior, through regulations, defined the term "harm" as "an act which actually kills or injures wildlife by significantly impairing essential behavioral patterns, including breeding, feeding, or sheltering." However, permits for "incidental take" can be obtained from USFWS for take of endangered species which would occur as a result of an otherwise legal activity.

Section 10 of the ESA allows for the development of "Habitat Conservation Plans" for endangered species on private lands or for the maintenance of facilities on private lands. This provision is designed to assist private landowners in incorporating conservation measures for listed species with their land and/or water development plans. Private landowners who develop and implement an approved habitat conservation plan can receive an incidental take permit that allows their development to proceed.

While the Service generally does not authorize incidental take under these Acts, USFWS realizes that some birds may be killed even if all reasonable measures to avoid the take are implemented. USFWS Office of Law Enforcement carries out its mission to protect migratory birds through investigations and enforcement, as well as by fostering relationships with individuals, companies, and industries who seek to minimize their impacts on migratory birds. Unless the take is authorized, it is not possible to absolve individuals, companies, or agencies from liability even if they implement avian mortality avoidance or similar conservation measures. However, the Office of Law Enforcement focuses on those individuals, companies, or agencies that take migratory birds with disregard for their actions and the law, especially when conservation measures have been developed but are not properly implemented.

State Regulations

Individual states may have regulations that protect avian species and a utility should consult with their respective State resource agency(s) to determine what regulations apply and if permits are required.

IV. APP PRINCIPLES

The following chapter provides guidance for implementation of each of the APP principles listed below:

- Corporate Policy
- Training
- Permit Compliance
- Construction Design Standards
- Nest Management
- Avian Reporting System
- Risk Assessment Methodology
- Mortality Reduction Measures
- Avian Enhancement Options
- Quality Control
- Public Awareness
- Key Resources

CORPORATE POLICY

The following are examples of utility Bird Management Policies. These policies have been included as examples to aid other utilities if they choose to develop a bird program policy.

Example 1. PacifiCorp's Bird Program Policy.

PacifiCorp Bird Management Policy

Bird interactions with power lines may cause bird injuries and mortalities, which, in turn, may result in outages, violations of bird protection laws, grass and forest fires, or raise concerns by employees, resource agencies and the public.

This policy is intended to ensure compliance with legal requirements, while improving distribution system reliability. PacifiCorp management and employees are responsible for managing bird interactions with power lines and are committed to reducing the detrimental effects of these interactions.

To fulfill this commitment, PacifiCorp will:

- Implement and comply with its comprehensive Avian Protection Plan (APP).
- Ensure its actions comply with applicable laws, regulations, permits, and APP procedures.
- Document bird mortalities, problem poles and lines, and problem nests.
- Provide information, resources, and training to improve its employees' knowledge and awareness of the APP.
- Construct all new or rebuilt lines in rural areas (outside city limits or beyond residential/commercial developments) and in areas of known raptor use, where appropriate, to PacifiCorp raptor-safe standards.
- Retrofit or modify power poles where a protected bird has died. Modifications will be in accordance with APP procedures.
- Participate with public and private organizations in programs and research to reduce detrimental effects of bird interactions with power lines.

PacifiCorp customer service and regulatory compliance will be enhanced and risk to migratory birds will be reduced through the proactive and innovative resolutions of bird power line interactions guided by this policy.

Signature, Executive Vice President_____ Date_____

Example 2. Southern California Edison's Policy and Procedures.

Avian Protection On or Near Power Lines

1.0 PURPOSE

One or more state and federal laws legally protect many species of birds in SCE's service territory. In order to ensure SCE's compliance with laws and regulations protecting these birds, it is necessary to have procedures in place that will allow SCE to determine where impacts are most likely to occur, what additional measures may need to be implemented to achieve compliance, if mitigation of impacts is needed, and to undertake other activities to facilitate protection of these legally protected birds on or near SCE power lines, substations and other facilities. This document is not intended to set out the specific legal requirements of all laws dealing with birds. Rather, this standard is intended to provide a process for achieving compliance with those laws.

2.0 POLICY STATEMENTS

N/A

3.0 REFERENCES

3.1 ESM 02.002.01, Environmental Policy

3.2 Endangered Species Alert Program Manual

3.3 SCE Distribution Overhead Construction Standards

4.0 OPERATIONS

4.1 Reporting

Raptor electrocutions and power line collisions shall be reported to Environmental Affairs (EA) within 24 hours of discovery of a carcass, using the current reporting mechanism or form. Non-raptor electrocutions and collisions will be reported using the Transmission and Distribution (T&D) Morning Report. Questions concerning reporting of other electrocutions of other animals should be referred to Environmental Affairs or your local T&D Environmental Specialist for guidance.

4.2 Retrofitting of Existing Structures

Any SCE power line structure involved in the electrocution of any eagle, endangered/threatened bird species, or other raptor species will be evaluated to determine if it is raptor safe. If not, the structure will be modified within 30 business days or sooner (for eagles or listed species) to make them raptor-safe. Environmental Affairs should be notified if structures of a similar design and in similar habitat are located in the same vicinity of any electrocution. This will allow Environmental Affairs to work with T&D in determining if these other structures should also be retrofitted to be raptor safe. Structures in the area where clusters of electrocutions have occurred *(i.e.,* three or more electrocutions per USGS quad, or two or more electrocutions per circuit) should be examined for retrofitting. Environmental Affairs will work with T&D to identify these clusters, determine which poles may need to be retrofitted, and the appropriate retrofit required.

Page 1 of 2

Example 2 *(con't).*

As opportunities arise during routine operation and maintenance activities, T&D field personnel will retrofit exposed wires and surfaces, as appropriate, if they are capable of electrocuting raptors and other birds/wildlife. Retrofits may include, but are not limited to, installing approved bushing covers on transformers, insulator hoods, protective covering on jumper wires or taps, and making other modifications, as appropriate.

4.3 New Construction
All new or rebuilt power line structures within Raptor Concentration Areas (RCAs) will be of a raptor-safe construction. All new or rebuilt power line structures on land administered by the federal government (USFS, BLM, etc.) will be evaluated by T&D and Environmental Affairs to determine if it should be made raptor safe. Environmental Affairs has identified and mapped RCAs, and will provide guidance on safe designs and copies of RCA maps.

4.4 Monitoring
Environmental Affairs shall monitor raptor mortality and direct appropriate corrective action.

4.5 Nest Protection
All activity involving active nests on SCE facilities will be coordinated with Environmental Affairs and the local T&D Environmental Specialist. Prior to trimming trees, Line Clearing personnel will inspect the trees during the nesting season (January through August) for nests, and avoid any trees with active *(i.e.,* eggs or young birds present) nests. If the trees with nests present an emergency, then Environmental Affairs Land Services will be contacted. Avoiding trees is especially important in the vicinity of riparian areas (streams, creeks or other water bodies). Line Clearing personnel will make every attempt to schedule tree-trimming activity to avoid riparian areas during the nesting season.

4.6 Training
All appropriate T&D field personnel will receive training on avian protection issues annually. All appropriate T&D contractors will receive some level of training on natural resources issues and will have contractual obligations to abide by this training.

5.0 MAINTENANCE
N/A

6.0 ATTACHMENTS
N/A

"Copyright © 2002 by Southern California Edison Company."

TRAINING

Training is an integral component of an APP. Workshops and short courses on avian/power line interactions are provided by APLIC (http://aplic.org) and EEI (http://eei.org). A two-hour overview of avian electrocutions and collisions intended for training use is also available through the APLIC website as part of the APP "tool box."

The following are examples of PacifiCorp and Southern California Edison training materials, including:

- Flow diagrams of company procedures for bird and nest management that can be distributed to field personnel as part of employee training.
- A brochure describing electrocution and nest issues and company raptor protection procedures.
- A brochure describing nest management procedures and protection.

Example 3. Bird mortality flow diagram based on PacifiCorp training materials.*

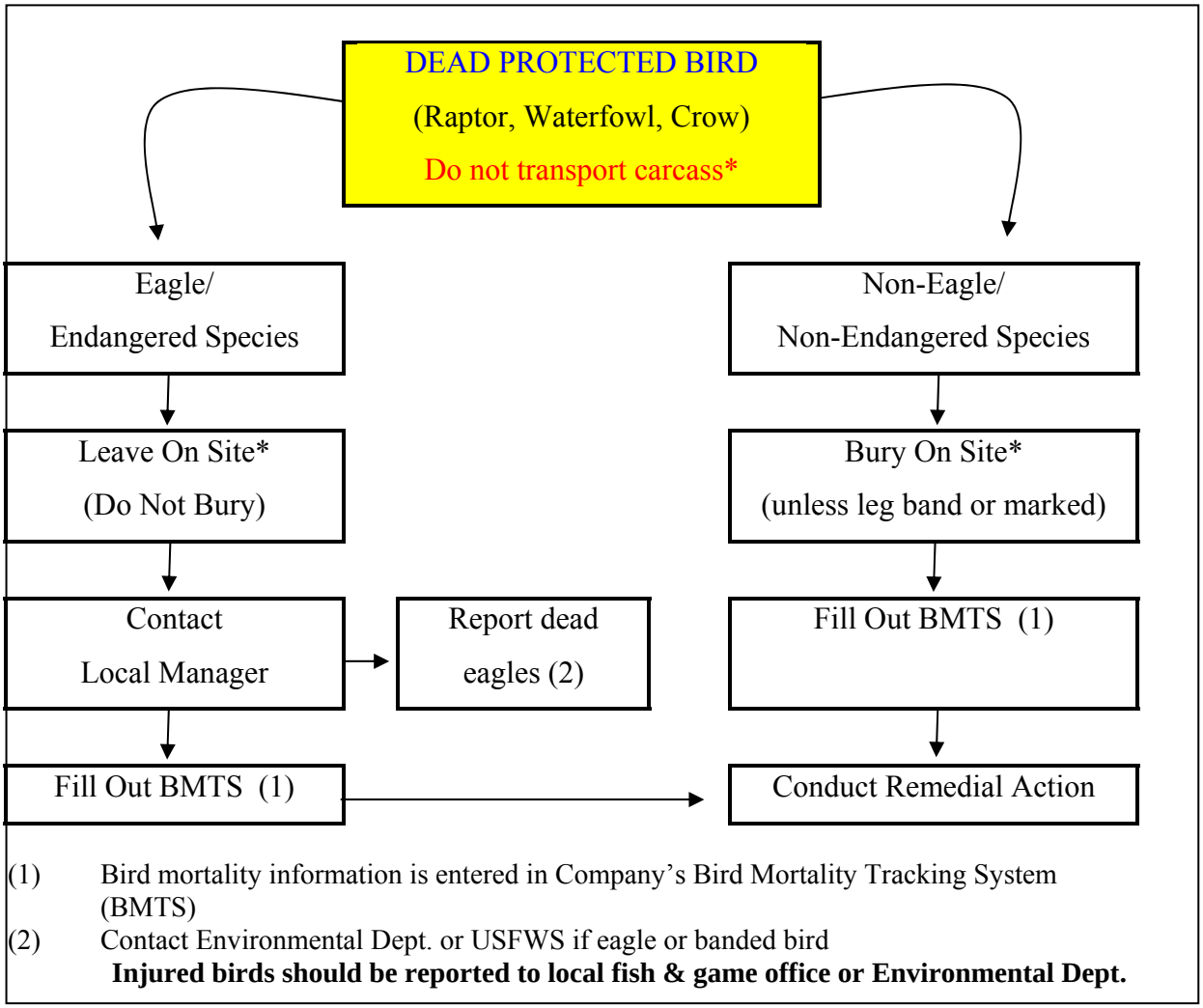

* *Individual utility permits may contain different conditions regarding transport or salvage.*

Example 4. Nest management flow diagram based on PacifiCorp training materials.*

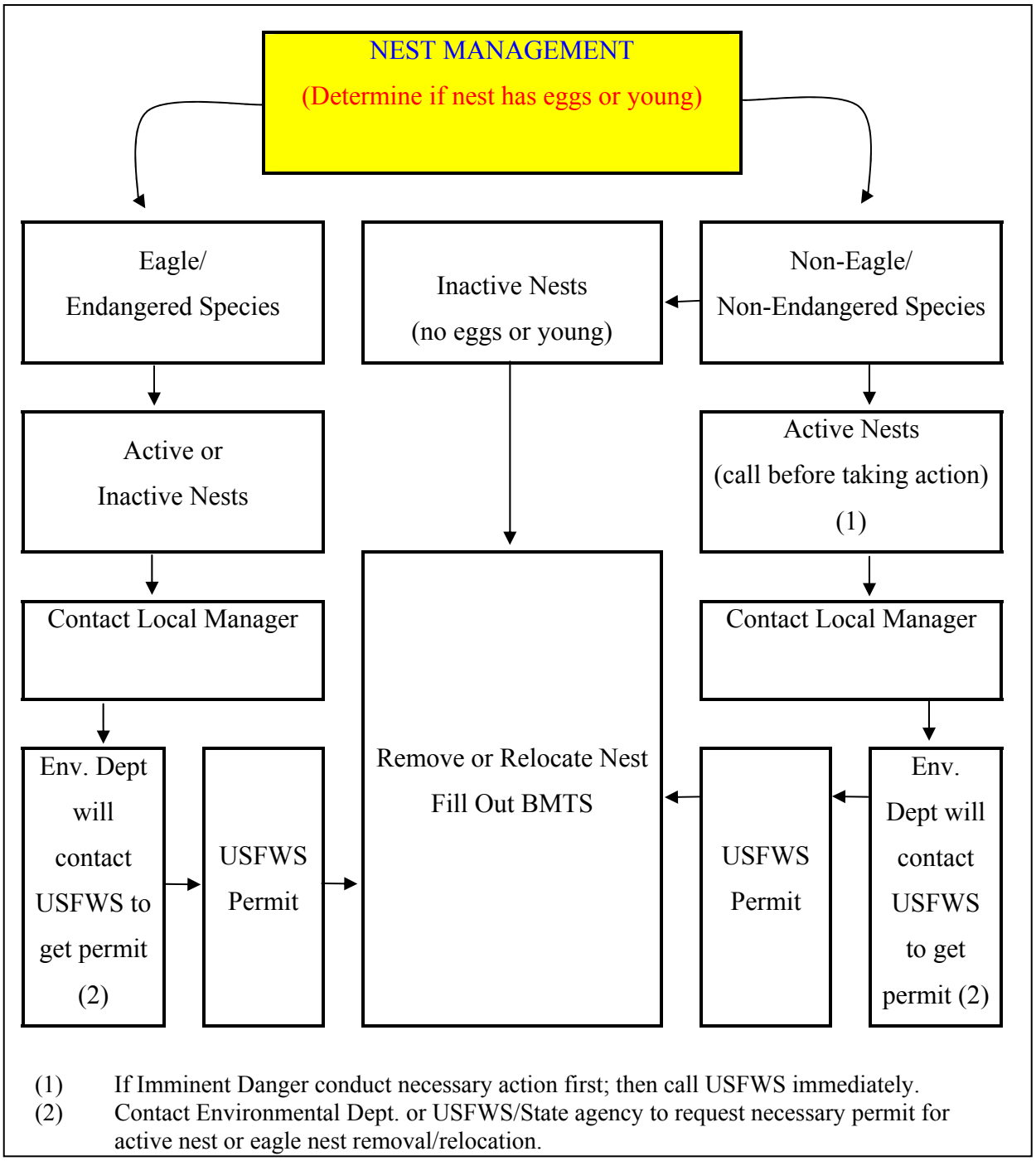

* *Individual utility permits may contain different conditions regarding nest management.*

Example 5. "Raptor Protection Program" brochure, Southern California Edison.

SOUTHERN CALIFORNIA EDISON®

An *EDISON INTERNATIONAL*® Company

RAPTOR PROTECTION PROGRAM

Raptor Protection Program Goals

Raptors, or birds of prey, are meat-eating birds that include the hawks, eagles, and owls. Most species of raptors are protected under one or more laws and/or regulations.

Edison's Raptor Protection Program is designed to:

1. Reduce impacts to raptors.
2. Ensure compliance with state and federal laws and rules and regulations protecting these species.
3. Gather and provide information from operating divisions within Edison to Environmental Affairs on facility-caused electrocutions. This information will assist Environmental Affairs in responding to regulatory agency inquiries and provide informed responses to concerns expressed by the public.
4. Assist Company biologists in identifying problem areas where raptor protection may be required. Selectively identify and install cost-effective raptor protection devices to ensure Company compliance with existing laws and regulations.
5. Help identify and isolate where bird-caused outages occur so that these can be minimized, providing higher levels of quality service to our customers.

Example 5 *(con't).*

Raptor Protection

Electrocutions

Raptors often perch or nest on transmission or distribution towers or poles. Occasionally, the birds will make accidental contact between phases or phase and ground, causing harm to or electrocuting the bird. These electrocutions are most common on distribution or subtransmission facilities where energized conductors are close together.

The number of electrocutions can be decreased by either designing the line to minimize contact between phases, or by retrofitting existing lines where necessary with a protective device that prevents this contact. Studies have demonstrated that raptors prefer certain poles for nesting and perching. By identifying these preferred poles, we can modify them, and thus greatly diminish the potential for raptor electrocutions in a cost-effective manner.

Nest Protection

In the absence of other suitable nest sites, raptors often use transmission towers and distribution poles for nesting. State and federal laws and regulations protect these nests from removal at certain times of the year without necessary permits. It is important that nests not be disturbed when eggs or young birds are in them.

Raptor Protection Program Procedures

1. All incidents of facility-related raptor mortality should be reported to your supervisor. You should then fill out the raptor mortality report form available in all district offices or from your supervisor. The completed form should be sent to Environmental Affairs in the General Office.
2. From February through June, nests should not be removed or disturbed. Under no circumstances should known eagle nests be disturbed at any time of the year.
3. If a nest is discovered during this February–June period that presents a hazardous situation for the continued safe operation of the line, try to trim the nest rather than remove it. If a nest must be removed, call Environmental Affairs. Environmental Affairs possesses or will obtain the necessary permits for removing nests.
4. If at any time you have questions regarding these procedures, please discuss them with your supervisor or call Environmental Affairs, Dan Pearson at PAX 29562, or Janet Baas at PAX 29541.

Example 6. "Protection of Breeding Bird Nest Sites" brochure, Southern California Edison.

What to Do if You Are Working in Sensitive Areas or Find an Active Nest

- Avoid tree or shrub trimming to the extent feasible during the nesting season, especially in sensitive areas (riparian or sage scrub habitats).
- Limit noise during the nesting season to the extent feasible by turning off equipment when not in use and/or using equipment with mufflers.
- If a nest is found, **carefully** determine if the nest is active, that is, if it contains eggs or young. Do not touch the nest or its contents.
- If young are inadvertently knocked out of a nest or are found on the ground after trimming **call Environmental Affairs (EA) immediately**. If the young are small and the nest can be found and is intact, the young may be carefully replaced in the nest (using gloves). If the young are large and active or the nest can not be found or is not intact, the young should be protected and kept warm, if possible. EA will contact a rehabilitation expert for pick up.
- CONTACT EA IF YOU MUST WORK IN A SENSITIVE AREA DURING THE NESTING SEASON OR ENCOUNTER AN ACTIVE NEST THAT MUST BE REMOVED, TRIMMED, OR MAY BE DISTURBED BY VEGETATION CLEARING ACTIVITIES OR TO PROTECT PUBLIC HEALTH AND SAFETY. Note: eagle nests may never be removed or relocated at any time of year without clearance from the US Fish and Wildlife Service and the California Department of Fish and Game. Contact EA if it is necessary to handle an eagle nest in any way.

What to Do if You Have Questions

If you have any questions, such as whether or not you are working in a sensitive area, if there is the potential for sensitive species to be nesting where you will be working, or you find an active bird nest while you are working, contact your supervisor (first) or any of the following EA personnel:

Tracey Alsbrook	PAX 27547 or (626) 302-7547
Janet Baas	PAX 29541 or (626) 302-9541
Jill Farlss	PAX 28545 or (626) 302-8545
Dan Pearson	PAX 29562 or (626) 302-9562

Outside of normal business hours, you may contact these people through the Edison operator. All may be contacted by pager.

1688 442

SOUTHERN CALIFORNIA EDISON®
An EDISON INTERNATIONAL® Company

PROTECTION OF BREEDING BIRD NEST SITES

Why SCE is Concerned About Bird Nests

Pygmy owl (Cavity nest)

Example 6 *(con't).*

Virtually all birds in North America are protected by one or more state or federal laws. SCE must be in compliance with all laws and regulations protecting birds, their habitat, and nest sites. It is illegal to, among other things, pursue, hunt, harass, kill, or collect any migratory or listed bird species, including their eggs or nest. Fines and penalties, including jail, can be substantial for non-compliance.

When and Where Birds Nest

Most birds nest during the period from mid-February through August. The specific timing depends on several factors such as species of bird, its nest location (altitude and latitude), abundance of food, and weather. Birds nest in a wide variety of habitats, such as riparian areas (along streams, creeks, ponds), forests, beaches, deserts, and foothills. That is, anywhere adequate shelter and food for young can be found. Nesting sites within these habitats include trees, shrubs, holes and cavities in trees or dirt embankments, on cliff ledges, on the ground, and utility poles and towers.

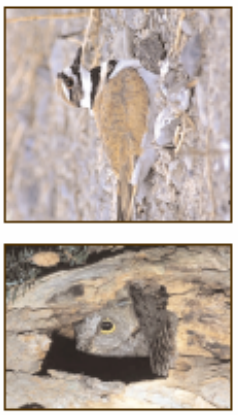

Screech owl
(Cavity nest)

Killdeer
(Ground nest)

Cactus wren
(Twiggy mass in cactus or yucca)

Willow Flycatcher
(Small cup in willow shrubs)

Red-tailed hawk
(Moderately large twiggy nest in tall trees or other elevated locations)

Nest sizes range from very large, obvious structures made by eagles, to very small, inconspicuous, and camouflaged ones used by hummingbirds.

Bald eagle
(Branches in large tree or on rocky outcrop)

Anna's hummingbird
(Tiny cup in a shrub)

How to Locate and Avoid Disturbing Nesting Birds

- Be aware of when birds nest (generally mid-February through August).
- Be aware when working in especially sensitive habitats, such as riparian and sage scrub (at least partly natural areas with somewhat woody shrubs, below about 3,000 feet).
- Note any bird activity within shrubs or trees. If a bird appears agitated or reluctant to leave an area, it may indicate a nearby nest.
- Many nests are found between the ground and 10 meters high in shrubs and trees.
- Look for small dark, generally cup-shaped masses among the branches of shrubs or both small and larger masses in trees.
- Prior to trimming or cutting down trees, look for holes or cavities that may contain nests.

PERMIT COMPLIANCE

A company should work with resource agencies to determine if permits are required for their operational activities that may impact protected avian species. Particular attention should be given to specific activities that can require Special Purpose or related permits, including, but not limited to, nest relocation, temporary possession, depredation, salvage/disposal, and scientific collection.

While it is recommended that each utility developing an APP familiarize itself with the different permit types and their provisions located in 50 CFR part 21 (http://access.gpo.gov/nara/cfr/waisidx_03/50cfr21_03.html), it is highly recommended that the utility make initial contact with the Migratory Bird Permit Examiner located in the USFWS Region where the utility is specifically planning to implement its APP. The Migratory Bird Permit Offices in each of the USFWS's seven Regions are listed on pages 69 and 70 of the Key Resources section.

To acquire a permit application, contact the Migratory Bird Permit Office in the Region where your business is headquartered or in the Region (if it is different) where you propose to implement your APP. Information about Regional boundaries can be accessed at htpp://permits.fws.gov/mbpermits/birdbasics.html then click on Regional Bird Permit Offices, for locations and addresses (listed on pages 69 and 70 in the Key Resources section).

State permits may also be required to manage protected bird nests or for temporary possession of avian species. Specific information on required permits should be obtained from your State resource agency (see Key Resources, pages 76-78, for State agency contacts). Both State and Federal agencies should be consulted as you develop your APP.

Migratory Bird Treaty Act and Migratory Bird Permits

USFWS Regional offices administer permits for qualified applicants for the following types of activities: falconry, raptor propagation, scientific collecting, rehabilitation, conservation education, migratory game bird propagation, salvage, take of

depredating birds, taxidermy, and waterfowl sale and disposal. These offices also administer permit activities involving bald and golden eagles, as authorized by the BGEPA.

The MBTA makes it illegal for anyone, including individuals, companies, or agencies, to take, possess, import, export, transport, sell, purchase, barter, or offer for sale, purchase, or barter, any migratory bird, or the parts, nests, or eggs of such a bird except (1) under the terms of a valid permit issued pursuant to Federal regulations or (2)under the terms of a regulation not requiring a permit. The migratory bird species protected by the Act are listed in 50 CFR 10.13 (this list is available online at http://migratorybirds.fws.gov/intrnltr/mbta/mbtintro.html).

Migratory bird permit policy is developed by the Division of Migratory Bird Management and the permits themselves are issued by the Regional Migratory Bird Permit Offices. The regulations governing migratory bird permits can be found in 50 CFR part 13, General Permit Procedures (http://access.gpo.gov/nara/cfr/waisidx_03/50cfr13_03.html) and 50 CFR part 21, Migratory Bird Permits (http://access.gpo.gov/nara/cfr/waisidx_03/50cfr21_03.html).

Bald and Golden Eagle Protection Act and Eagle Permits

The two species of eagles that are native to the United States have additional protection under the BGEPA. Under the Act, USFWS issues permits to take, possess, and transport bald and golden eagles for scientific, educational, and Indian religious purposes, depredation, and falconry (golden eagles). No permit authorizes the sale, purchase, barter, trade, importation, or exportation of eagles, or their parts or feathers. The regulations governing eagle permits can be found in 50 CFR part 13, General Permit Procedures (http://access.gpo.gov/nara/cfr/waisidx_03/50cfr13_03.html) and 50 CFR part 22, Eagle Permits (http://access.gpo.gov/nara/cfr/waisidx_03/50cfr22_03.html).

Federally Listed Species (Endangered Species Act)

To obtain a list of all federally-listed (threatened and endangered) birds, or all federally-listed fauna and flora, consult 50 CFR part 17.11. This list is available online at http://endangered.fws.gov/wildlife.html.

Where power companies propose to construct power generation, transmission, or related equipment on Federal lands, the federal land management agency must first consult under Section 7 of the ESA with USFWS. Before initiating an action, the Federal action agency (the agency authorizing a specific action) or its non-Federal permit applicant (the power company), must ask USFWS for a biological opinion (if a listed species could be impacted) and to provide a list of threatened, endangered, proposed, and candidate species and designated critical habitats that may be present in the project area. USFWS has developed a handbook describing the consultation process in detail, which is available at http://endangered.fws.gov/consultations.

When non-Federal activities (activities not on Federal lands and/or lacking a Federal nexus such as Federal funding) could result in a take of threatened or endangered species, an incidental take permit is required under Section 10 of the ESA. Some states may also have regulations that require issuance of permits or development of conservation plans. The standards for approval of an incidental take permit are found in section 10 of the ESA. Approval of an incidental take permit issued in conjunction with a Habitat Conservation Plan (HCP) requires the Secretary of Interior to find, after an opportunity for public comment, that among other things, the taking of ESA species will be incidental and that the applicant will, to the maximum extent practicable, minimize and mitigate the impacts of such taking. An HCP must accompany an application for an incidental take permit. The HCP associated with the permit is to ensure that there are adequate conservation measures to avoid jeopardy to the species. Information about consultations and HCPs can be obtained from the nearest USFWS Ecological Services Field Office, generally located in each state. A list of those offices and their phone numbers can be accessed at http://info.fws.gov/pocketguide.

CONSTRUCTION DESIGN STANDARDS*

In certain habitats that have power equipment and the potential for avian interactions, the design and installation of new facilities, as well as the operation and maintenance of existing facilities should be bird friendly. Inclusions of accepted construction standards for both new and retrofit techniques are highly recommended for inclusion in an APP. Companies can either rely upon construction design standards found in APLIC's *Suggested Practices for Raptor Protection on Power Lines: The State of the Art in 1996* and *Mitigating Bird Collisions with Power Lines: The State of the Art in 1994*, or the most current editions of these documents, or may choose to develop their own internal construction standards that meet or exceed these guidelines. These standards should be used in areas where new construction should be avian-safe, as well as where existing infrastructure needs to be retrofitted. An APP bird policy may require that all new or rebuilt lines in identified avian use or problem areas be built to current safe standards. Implementing avian-safe construction standards in such areas will reduce future legal and public relations problems and enhance service reliability.

New Construction

Distribution, transmission and substation construction standards must meet National Electric Safety Code (NESC) requirements and should provide general information on specialized construction designs for avian use areas. Avian-safe construction, designed to prevent electrocutions, must provide conductor separation of 60 inches between energized conductors and grounded hardware, or must cover energized parts and hardware if such spacing is not possible. Some common examples of avian-safe construction and retrofit techniques to reduce electrocution risks are presented in this section. Additional information can be found in *Suggested Practices for Raptor Protection on Power Lines.*

In areas where birds frequently collide with conductors/ground wires, or where

* Only examples of common structure configurations are presented in these Guidelines. See current edition of *Suggested Practices* for additional configurations and recommendations.

agencies are concerned about the safety of protected birds (*e.g.*, near wildlife refuges), appropriate siting and placement of lines will reduce the likelihood of collisions. When possible, avoid siting lines in areas where birds concentrate (*e.g.*, wetlands, stream crossings, historic staging areas, roosts, and nesting colonies) and take advantage of vegetation or topography that naturally shields birds from colliding with the wires (*e.g.*, placement next to cliffs or trees). If this is not possible, installing visibility enhancement devices can reduce the risk of collision on new or existing lines (see pages 43-44). These devices include marker balls, bird diverters, or other line visibility devices placed in varying configurations, depending on the line design and location. The effectiveness of these devices has been validated by Federal and State agencies and independent researchers in conjunction with APLIC. Additional information may be found in *Mitigating Bird Collisions with Power Lines.* In some situations, the additional costs and reliability risk of under grounding a section of line may be justified.

Modification of Existing Facilities

Modification of existing facilities is necessary when dead and/or injured protected birds are found, where high-risk lines are identified, or concerns of legal compliance are at issue. A “problem pole” is one where there has been a documented avian collision, electrocution, problem nest material or where there is a high risk of an avian mortality. The need for this remedial action may result when "problem poles" are identified through bird mortality records or field surveys, or when the company is notified by agency representatives or concerned customers. System reliability concerns due to bird interactions may also result in requests from field operations staff. Retrofitting to prevent electrocutions could include: 1) covering jumper wires, conductors and equipment; 2) discouraging perching in unsafe areas; 3) reframing; or 4) replacing a structure.

The objectives of remedial action are to:

1. Prevent or reduce avian mortality and outages related to bird electrocutions, collisions, or nests;

2. Provide 60-inch minimum horizontal separation between energized conductors and/or energized conductors and grounded hardware;
3. Insulate hardware or conductors against simultaneous contact if adequate spacing is not possible;
4. Discourage birds from perching in unsafe locations;
5. Provide safe alternative locations for perching or nesting; or
6. Increase the visibility of conductors or shield wires to prevent avian collisions.

Site-Specific Plans

The factors that create a hazard for birds near power lines are complex and often site-specific. Therefore, the most efficient solution for correcting a problem line is a site-specific plan that satisfies unique local conditions (*i.e.*, topography, avian populations, prey populations, land use practices, line configuration, adjacent wetlands, historical bird use areas, etc.). The plan is comprised of recommendations for the most appropriate remedial action to the poles or lines causing the problem, and should include a timetable for job completion. When a problem area or line is identified, a site meeting may be conducted with engineering and operations personnel to provide guidance on line modifications, and with company biologists or consultants to provide input on biological aspects of the affected species. The timeframe for action will be based on agency requests, public relations, budget, logistical and manpower constraints, as well as biological considerations that affect species vulnerability. The application of remedial measures to a few "problem poles" or spans can reduce problems over a wide area.

Electrocutions: Avian-Risk Designs

This section provides information about designs which have historically caused avian electrocution problems. These designs should be avoided in known raptor or other protected bird use areas and rural sites.

Most lines that electrocute raptors or other large birds are primary distribution lines. Problems occur most often when:

1. The distance between conductors is less than the wingspan or height of a landing or perching bird (see Figure 3).
2. Hardware or equipment cases are grounded and are in close proximity to energized conductors, energized parts or jumper wires (see Figure 4).

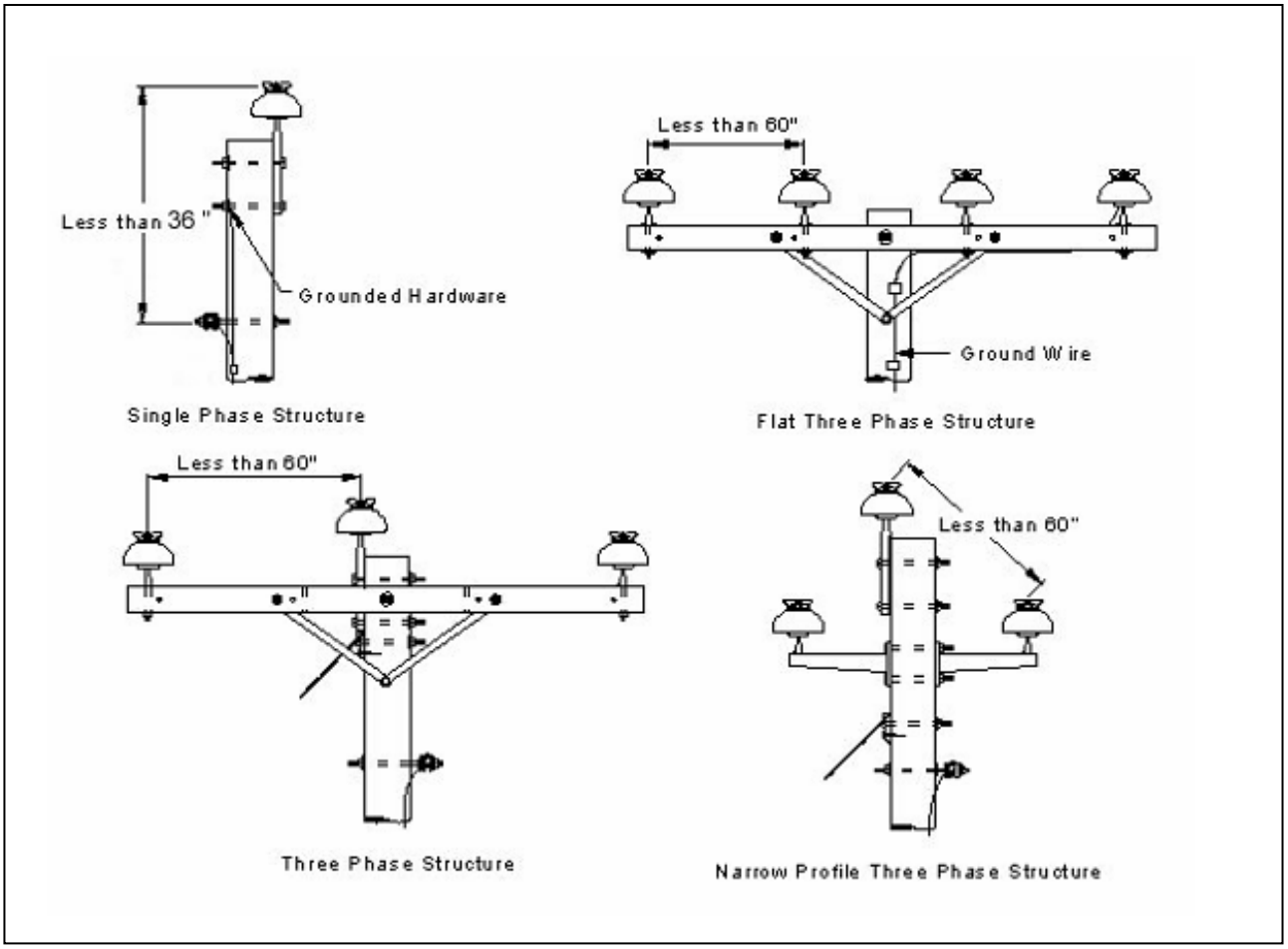

Figure 3. Typical avian-risk structures.

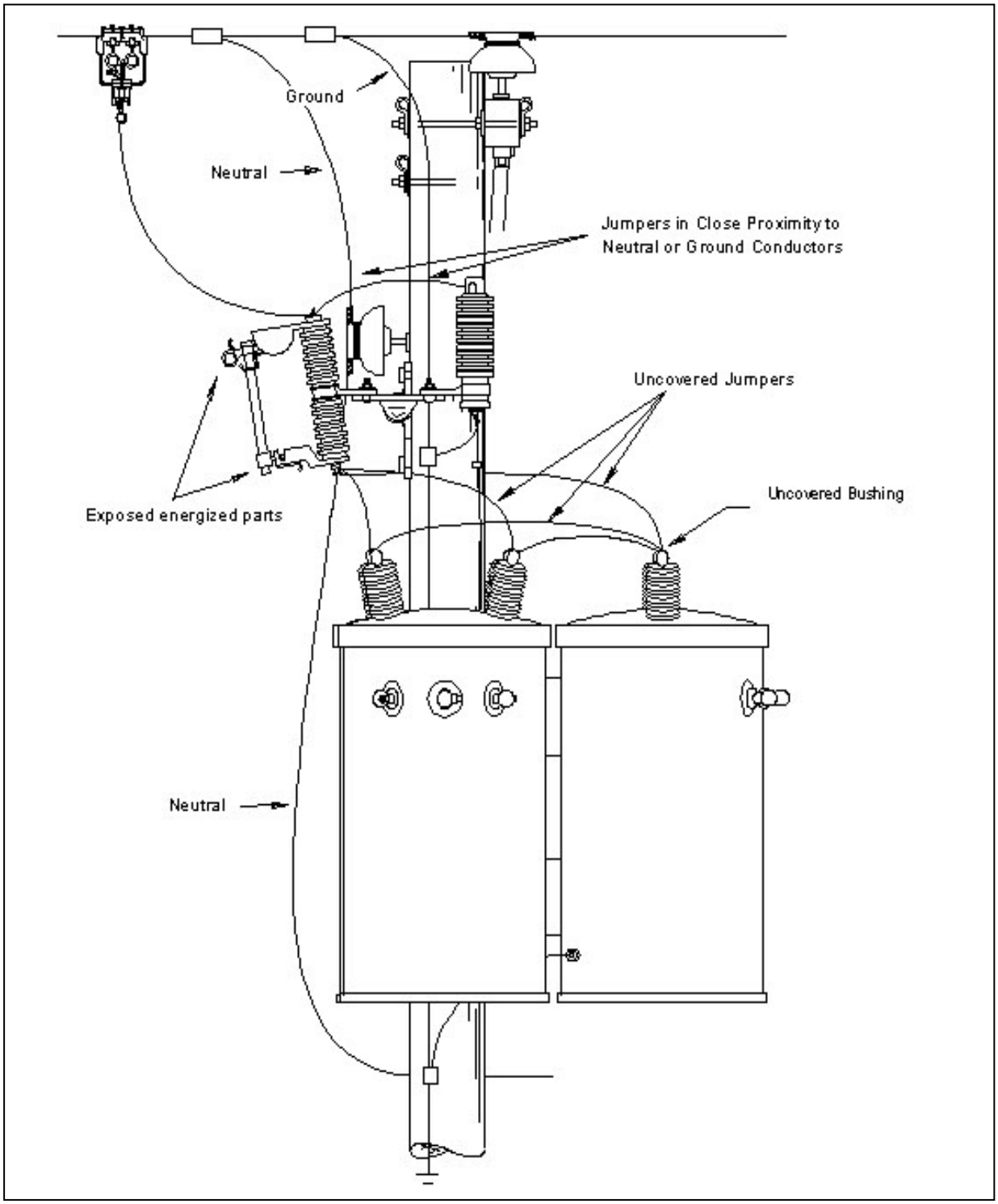

Figure 4. Typical avian-risk equipment structure.

This section provides information on designs and criteria for constructing new lines or rebuilding existing lines to avian-safe standards.

Proper Design of New Facilities

The following dimensions for primary structures are intended for use in areas with populations of raptors or other large birds or in rural sites (areas outside city limits or beyond incorporated areas with commercial or residential development). Nonetheless, avian-safe construction should be considered to improve system reliability and avian protection whenever it does not conflict with other considerations. When a new line or extension is designed, avian-safe standards for construction of the distribution system should be followed (see Figures 5 and 6 for typical safe designs).

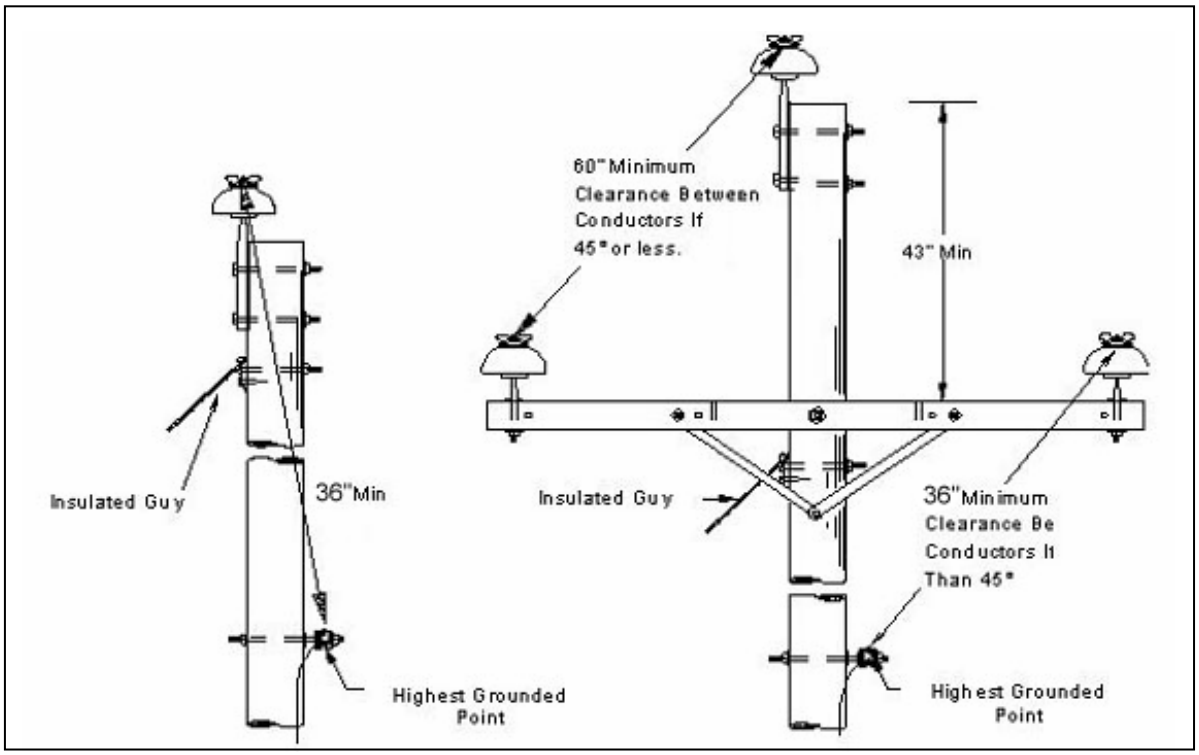

Figure 5. Typical avian safe structures: single phase (left), three-phase with lowered 8-foot crossarm (right).

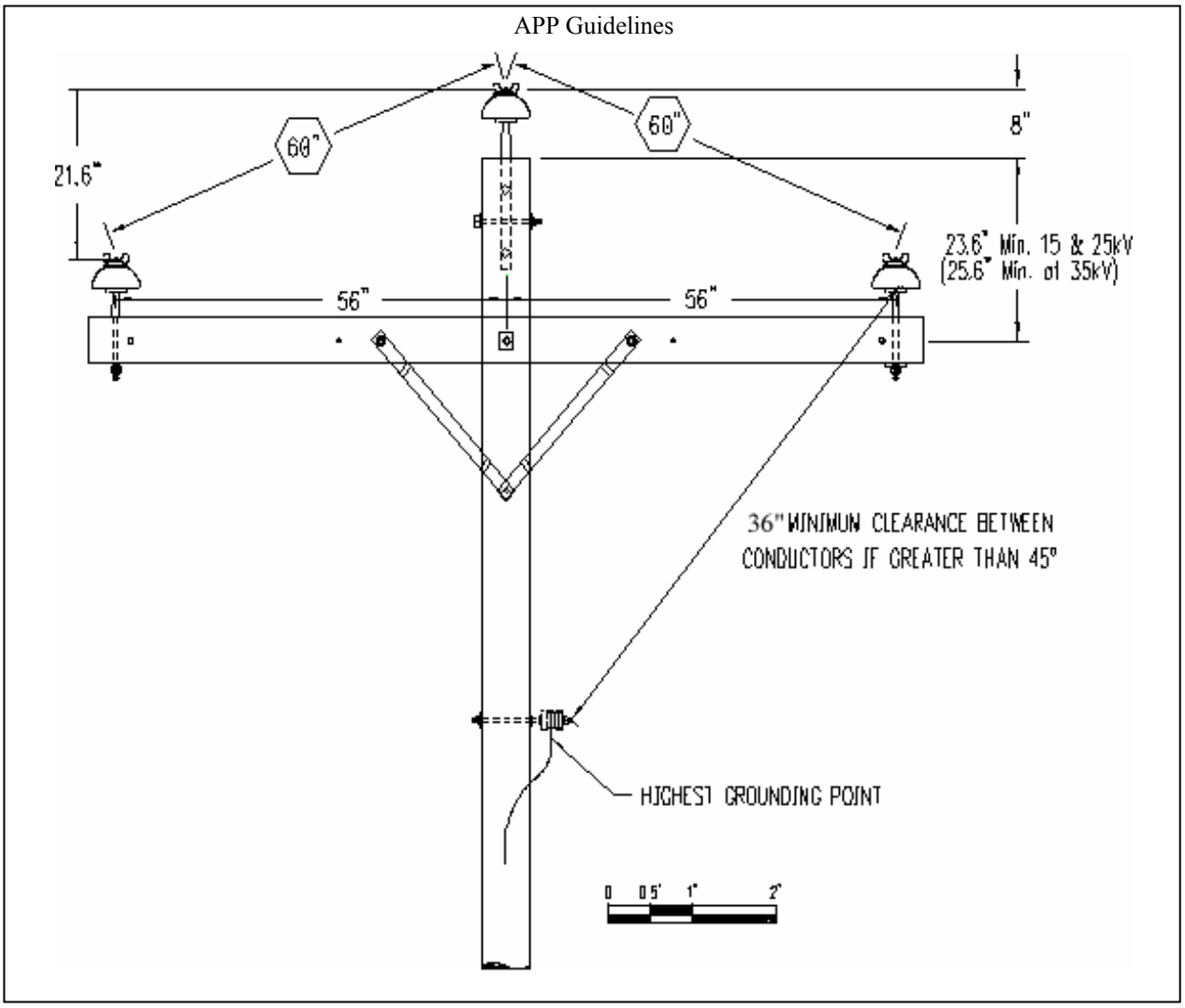

Figure 6. Typical three–phase avian-safe structure with 10–foot crossarm.

On single phase structures, a minimum vertical separation of 36 inches from phase to ground is needed to safely accommodate eagles and most wading birds (Figure 5). On three phase structures, a vertical clearance of at least 43 inches between un-insulated conductors, ground wires and grounded hardware on poles with 8-foot crossarms will provide the 60-inch required clearance (Figure 5). Separation can be accomplished by lowering crossarms and neutral attachments, or if vertical space is not available, an 8–foot crossarm can be replaced with a 10–foot arm (see Figure 6). If there is not enough pole height to drop the crossarm, a 10-foot crossarm can be the economical choice. Structural strength of the longer arm must be considered if the arm is replaced. Also, narrow rights-of-way may dictate the horizontal width of a crossarm, possibly requiring more pole height to achieve avian-safe spacing. Regardless of the configuration, hardware should not be grounded above the neutral position.

An alternate method for ensuring separation of energized conductors is to use vertical construction (see Figure 7). This is not the preferred method of separation, since considerable pole height is required to attain adequate clearance, making this an expensive solution. However, it may be useful in some situations, such as turning corners, where normal separation methods are not possible.

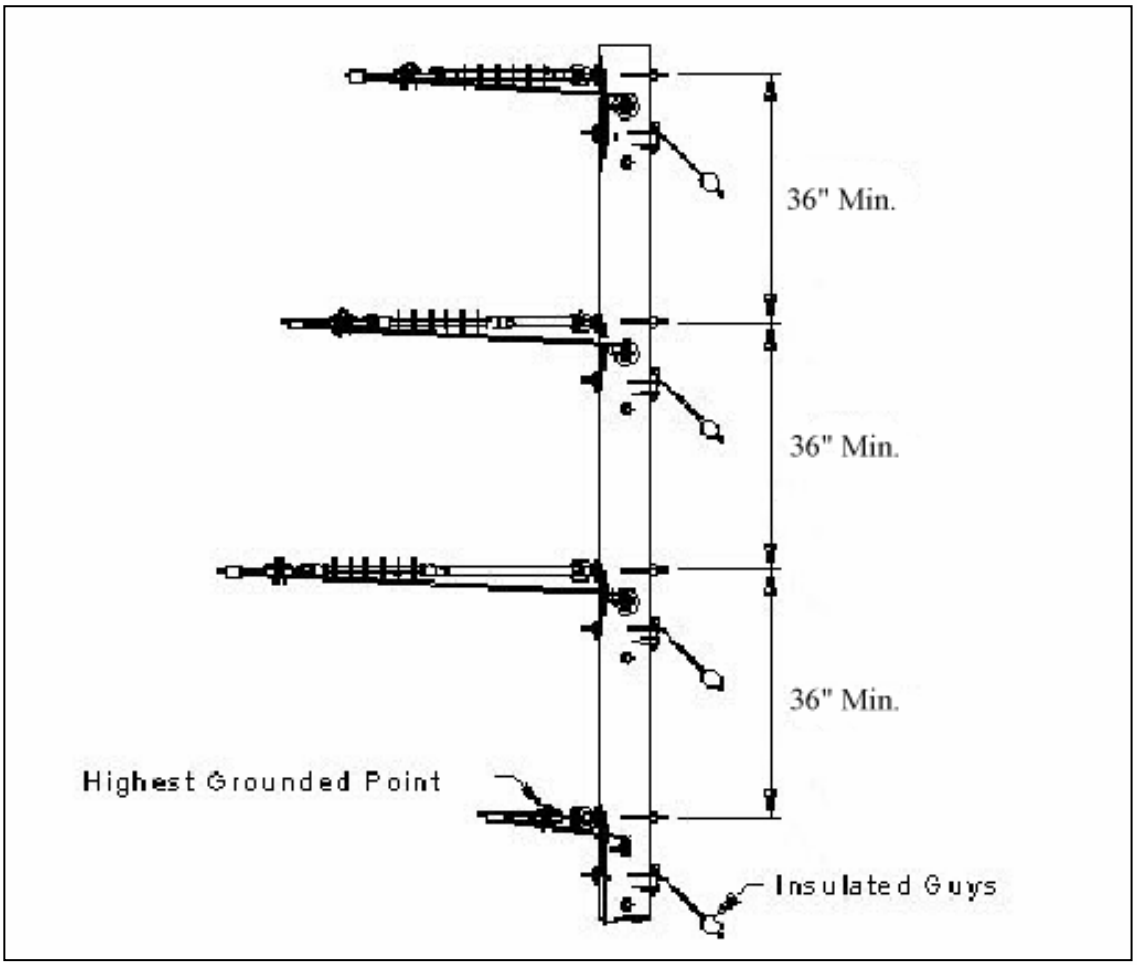

Figure 7. Typical avian-safe three-phase vertical corner configuration.

Modification of Existing Structures

On existing structures where raptors or other large birds have been electrocuted or injured, the preferred remedial measure is to provide 60–inch separation between energized conductors. Reframing using a 10–foot crossarm which allows 60–inch separation between conductors may be a suitable alternative to pole replacement.

However, pole replacement utilizing a safe design may be required on poles where bird mortalities have been documented and other safe modifications are not feasible due to pole height or condition.

Other remedial options include covering conductors and equipment or installing bird perch guards (triangles) or triangles with perches. These options do not offer total protection for birds, but may greatly reduce the chance of avian electrocutions. These options should be used when separation of the conductors is not possible, or where equipment is on the pole.

Perches and Guards

If conductor separation cannot be achieved and covering or reframing is impractical, perch guards (triangles) with optional perches may be used for large perching bird protection (Figure 8). Since raptors will often perch on the highest vantage point, the installation of perch guards between closely-spaced conductors and the placement of perches above existing arms and conductors may keep a bird from contacting energized parts or wires. Perches may not be effective when used without perch guards. Perches and guards, when properly installed, are not an absolute solution, but they do reduce the risk to birds. Ideally, when a perch guard is installed, an alternative, safe perch site should be provided. The open part of the crossarm, as shown in Figure 8, could serve as such a site. Perch guards are generally 18 to 22 inches wide and should not be used when conductor spacing is greater than 32 inches. When spacing is between 32 and 60 inches, use an insulator cover (see Figure 9) instead of a triangle or perch. Protective equipment should not be installed when conductors are more than 60 inches apart.

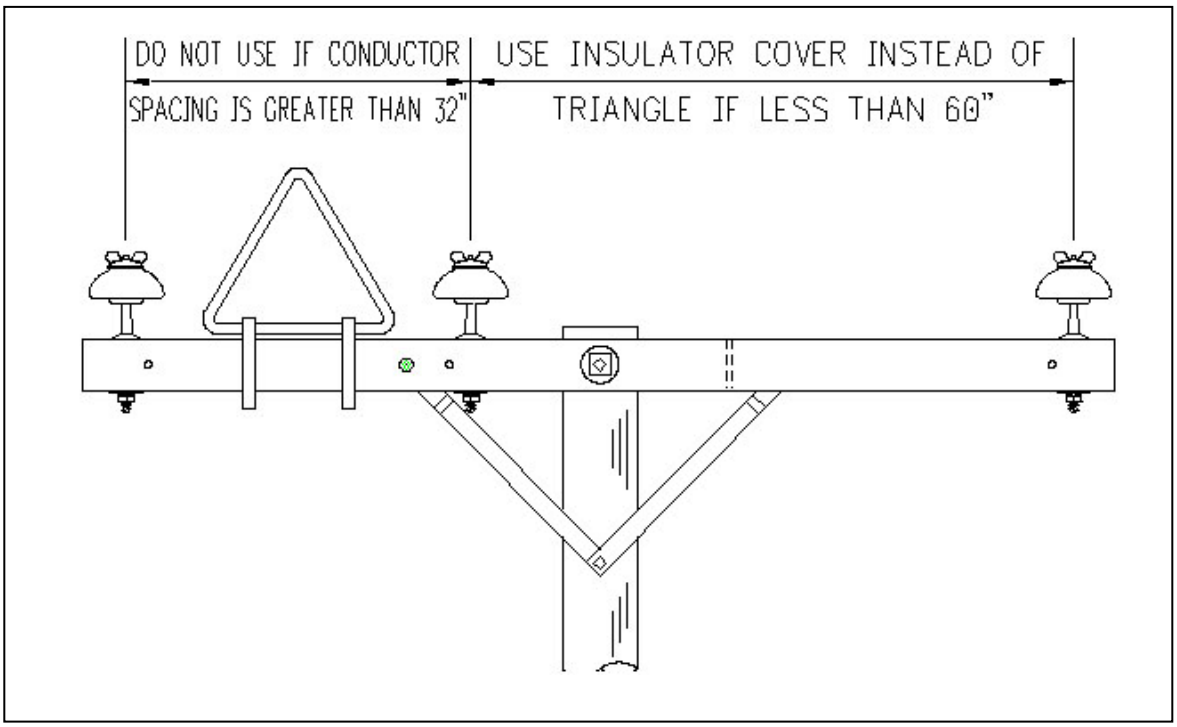

Figure 8. Properly installed perch guard.

Covering Conductors

Where adequate separation of conductors, or conductors and grounded parts, cannot be achieved, covering conductors may be the only solution short of reframing or replacing structures. Covering material should be used to cover both the conductor and the insulator. On three phase structures, the cover should extend a minimum of three feet from the pole top pin insulator (see Figure 9). Occasionally, on double circuits or distribution underbuild, a smaller (32 to 36-inch) one–piece cover may be used in areas where eagles or other large birds are absent. There are many manufactures of insulator covers. Insulator covers are similar to the temporary cover-ups used to protect crews working on energized lines. ***However, the products should not be used for human protection or considered as insulation.***

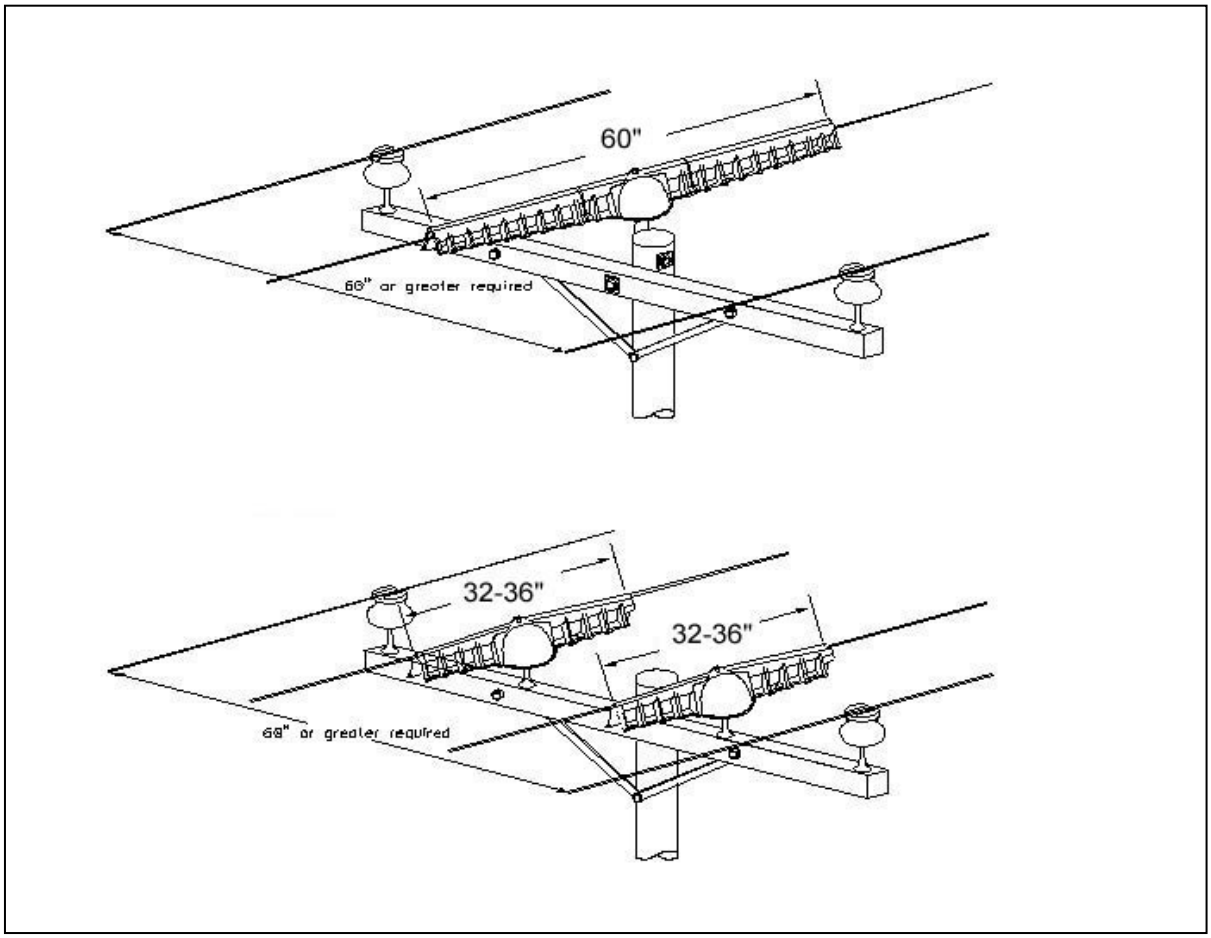

Figure 9. Conductor and insulator covers.

Covering Equipment Parts

If transformers, cutouts or other energized or grounded equipment are present on the structure, jumpers, cutouts and bushings should be covered to decrease the chance of a bird electrocution (Figure 10). For jumper wires, use a bird jumper wire guard, cover-up hose or insulated power cable. For cutouts, various covers are available to fit different sizes and styles of cutouts. For bushings, use a bushing guard that provides the protection needed. (*Note* - Your APP should include specifications on materials your utility will accept).

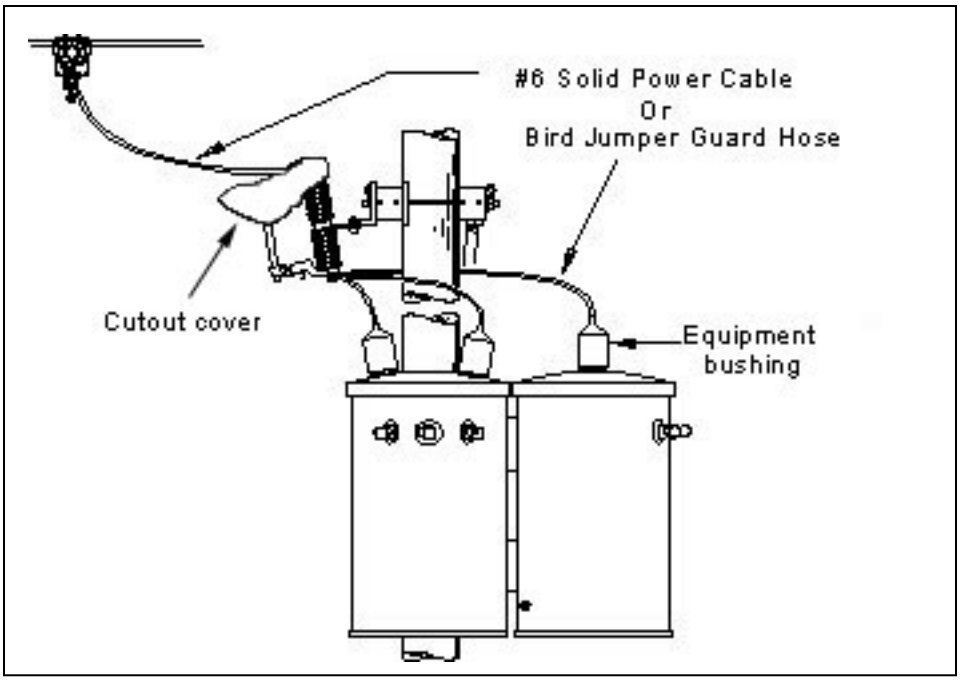

Figure 10. Hose and bushing caps.

Collisions: Bird Protection

The proximity of a line to high bird-use areas, vegetation that may attract the birds, and topographical features that affect local and migratory movements should be considered when determining the extent of necessary remedial action or when siting a new line. Avoiding construction of new lines in areas of high bird use may be the best way to prevent or minimize collision issues.

On existing lines, the risk of collision may be reduced or eliminated by burying or relocating the line, reconfiguring the line, removing the overhead ground wire, or marking the line to increase visibility. Because in most instances remediation of only a few spans will eliminate the problem, burying, relocating or reconfiguring the line are not cost-effective solutions. Removal of the overhead ground wire may not be feasible due to operational or safety concerns. However, research indicates that marking the shield wire (transmission lines) or conductors (distribution lines) to increase visibility significantly reduces the incidence of avian collisions.

Marker balls, swinging markers, bird flight diverters, or other similar devices are commercially available products designed to increase the visibility of overhead wires to

birds. Examples of one type of swinging marker and a bird flight diverter are shown in Figure 11. While some older clamping devices could damage lines, some of the newer devices have been designed to prevent damage to lines.

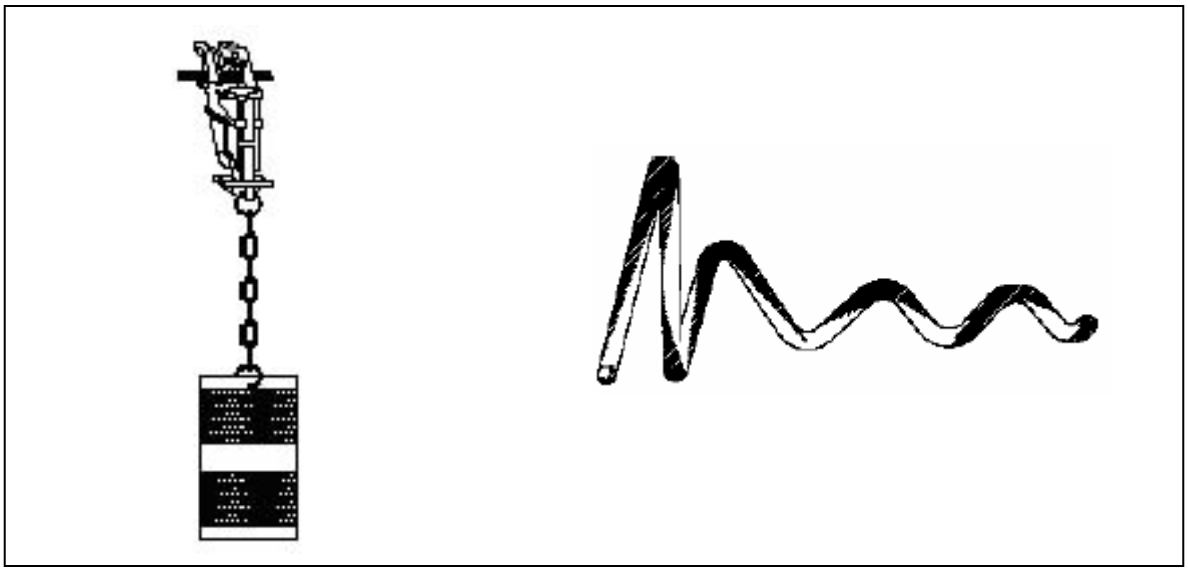

Figure 11. Swinging marker device (left) and bird flight diverter (right).

NEST MANAGEMENT

Raptors, and some other avian species, benefit from the presence of power lines by utilizing distribution poles and transmission structures for nesting. Although electrocution of birds that nest on transmission towers is infrequent, bird nests can cause operational problems. Removal of nests generally does not solve the problem because most species are site-tenacious and rebuild shortly after the nest material is removed. There are also regulatory and public relations components to nest removal (see Permit Compliance section for information on nest-related permits). Further, companies may experience public relations benefits by providing safe nesting locations. All active nests (eggs or young present) of designated migratory birds are protected by the Migratory Bird Treaty Act. A permit issued by USFWS may be required before managing an active nest. If a problem with a specific nest is anticipated, permit requirements may be avoided by removing the nest or taking the appropriate action during the non-breeding season while it is inactive (excluding eagles and endangered/threatened species). The breeding season and dates when nests may be active varies by location and species, but for most North American raptors falls between February 1 and August 31. However, a nest is considered active only when eggs or young are present. If there are questions whether a problem nest is active or inactive, company environmental staff, USFWS, or State wildlife agencies should be consulted.

A memorandum from USFWS on nest management and nest destruction is provided in Figure 12 (page 47). This document can also be accessed online at http://permits.fws.gov/mbpermits/PoliciesHandbooks/MBPM-2.nest.PDF.

Nesting platforms have proven to be valuable tools in dealing with problem nests, both in terms of reducing outages and increasing positive publicity. Nesting platforms are generally needed more often for problem nests on distribution poles (because of closely spaced conductors) than for those on transmission towers. Platforms provide for the needs of the birds, while preventing electrocutions and electrical outages. Artificial nesting substrates in a variety of designs are often accepted by nesting raptors, especially ospreys. Because birds usually tend to stay at the pole where the initial nesting attempt occurs, a nesting platform should be placed nearby on a new, non-energized pole and

perch discourager(s) installed on the existing structure. The new nest platform pole should be as tall as or taller than the existing pole and should be placed adjacent to or near the existing pole with the problem nest. In some cases a new pole cannot be installed so a nest platform can be mounted above the crossarm. Mounting a nest platform above energized equipment is not encouraged because birds are likely to drop nest materials that could cause a fire or outage. Nest discouragers should be erected on the original nest pole to prevent birds from rebuilding. The existing nest, or other nesting material, should be relocated to the new platform to attract the birds. Nest platforms are commercially available or can be constructed with materials on hand such as wire spool ends or wooden pallets. In addition, volunteers can be solicited to construct nest platforms. Dimensions for a raptor nest platform are provided in the Avian Enhancement Options section (see Figure 14 on page 65). Additional designs can be found in *Suggested Practices.*

There may be times when nesting should be discouraged to prevent avian electrocutions or risks to electrical equipment. Concerns of local customers should be considered and proper placement of perch discouragers is important. Plastic or metal spike discouragers are not recommended to prevent nesting because they may actually provide a nest substrate attachment point for some species. PVC or fiberglass material perch discouragers, mounted on the crossarm, will usually prevent the placement of nesting material. See *Suggested Practices* for additional recommendations on nest deterrents.

Figure 12. USFWS memo on migratory bird nest destruction.

United States Department of the Interior
FISH AND WILDLIFE SERVICE
Washington, D C 20240
MBPM-2
Date: APR 15, 2003

MIGRATORY BIRD PERMIT MEMORANDUM

SUBJECT: Nest Destruction

PURPOSE: The purpose of the memorandum is to clarify the application of the Migratory Bird Treaty Act (MBTA) to migratory bird nest destruction, and to provide guidance for advising the public regarding this issue.

POLICY: The MBTA does not contain any prohibition that applies to the destruction of a migratory bird nest alone (without birds or eggs), provided that no possession occurs during the destruction. To minimize MBTA violations, Service employees should make every effort to inform the public of how to minimize the risk of taking migratory bird species whose nesting behaviors make it difficult to determine occupancy status or continuing nest dependency.

The MBTA specifically protects migratory bird nests from *possession, sale, purchase, barter, transport, import,* and *export,* and *take.* The other prohibitions of the MBTA - *capture, pursue, hunt,* and *kill* - are inapplicable to nests. The regulatory definition of *take,* as defined by 50 CFR 10.12, *means to pursue, hunt, shoot, wound, kill, trap, capture, or collect, or attempt hunt, shoot, wound, kill, trap, capture, or collect.* Only *collect* applies to nests.

While it is illegal to collect, possess, and by any means transfer possession of any migratory bird nest, the MBTA does not contain any prohibition that applies to the destruction of a bird nest alone (without birds or eggs), provided that no possession occurs during the destruction. The MBTA does not authorize the Service to issue permits in situations in which the prohibitions of the Act do not apply, such as the destruction of unoccupied nests. (Some unoccupied nests are legally protected by statutes other than the MBTA, including nests of threatened and endangered migratory bird species and bald and golden eagles, within certain parameters.)

However, the public should be made aware that, while destruction of a nest by itself is not prohibited under the MBTA, nest destruction that results in the unpermitted take of migratory birds or their eggs, is illegal and fully prosecutable under the MBTA.

Due to the biological and behavioral characteristics of some migratory bird species, destruction of their nests entails an elevated degree of risk of violating the MBTA. For example, colonial nesting birds are highly vulnerable to disturbance; the destruction of unoccupied nests during or near the nesting season could result in a significant level of take. Another example involves ground nesting species such as burrowing owls and bank swallows, which nest in cavities in the ground, making it difficult to detect whether or not their nests are occupied by eggs or nestlings or are otherwise still essential to the survival of the juvenile birds. The Service should make every effort to raise public awareness regarding the possible presence of birds and the risk of violating the MBTA, the Endangered Species Act (ESA), and the Bald and Golden Eagle Protection Act (BGEPA), and should inform the public of factors that will help minimize the likelihood that take would occur should nests be destroyed (i.e., when active nesting season normally occurs).

The Service should also take care to discern that persons who request MBTA permits for nest destruction are not targeting nests of endangered or threatened species or bald or golden eagles, so that the public can be made aware of the prohibitions of the ESA and the BGEPA against nest destruction.

In situations where it is necessary (i.e., for public safety) to remove (destroy) a nest that is occupied by eggs or nestlings or is otherwise still essential to the survival of a juvenile bird, and a permit is available pursuant to 50 CFR parts 13 and 21, the Service may issue a permit to take individual birds.

Steve Williams
Director

AVIAN REPORTING SYSTEM

USFWS Avian Mortality Reporting System

USFWS attempted in the 1970's, and again within the last few years, to estimate bird strike and electrocution mortality caused by power lines and utility structures nationwide. These estimates have been based on actual counts, extrapolations from industry, other data, and estimates based on the best information available. However, they cannot be considered conclusive, since a comprehensive nationwide study has not yet been conducted on power structures and their overall impacts on bird populations.

The former US Bureau of Sport Fisheries and Wildlife (now USFWS) published a one-time summary of bird mortality in 1979, entitled, *Human Related Mortality of Birds in the United States* (Banks 1979[1]). The report estimated annual avian mortality from varying causes between 1966 to 1972, mentioning strikes with electrical transmission wires as likely low at that time, while raising concerns about electrocutions from power transmission lines (now defined as power distribution lines) and electric fences (Banks 1979). Unfortunately, no updated mortality summary broadly encompassing hunting, scientific collecting, automobile collisions, communication tower strikes, picture window strikes, lead poisoning, electrocutions and power line strikes has been published more recently by USFWS. USFWS has published several papers on more current estimates of avian mortality, including estimates for power line strikes and electrocutions (Manville 2001a[2], 2001b[3], 2004[4]), but these publications are nowhere as comprehensive as the Banks (1979) paper. John Bridges of the Western Area Power Administration (Bridges

[1] Banks, R.C. 1979. Human related mortality of birds in the United States. U.S. Fish & Wildlife Service, National Fish and Wildlife Lab, Special Scientific Report -- Wildlife No. 215:1-16. GPO 848-972.

[2] Manville, A.M., II. 2001a. The ABCs of avoiding bird collisions at communication towers: next steps. Pp 85-103 in R.L. Carlton (editor). Avian interactions with utility and communication structures. Proceedings of a workshop held in Charleston, South Carolina, December 2-3, 1999. EPRI Technical Report, Concord, CA. 343 pp.

[3] Manville, A.M., II. 2001b. Avian mortality at communication towers: steps to alleviate a growing problem. Pp 75-86 in B.B. Levitt (editor). Cell towers -- wireless convenience? or environmental hazard? Proceedings of the "Cell Towers Forum," state of the science/state of the law, December 2, 2000, Litchfield, Connecticut. New Century Publishing 2000, Markham, Ontario. 348 pp.

[4] Manville, A.M., II. 2004. Bird strikes and electrocutions at power lines, communication towers, and wind turbines: state of the art and state of the science -- next steps toward mitigation. Bird Conservation Implementation in the Americas; Proceedings 3rd International Partners in Flight Conference 2002. C.J. Ralph and T.D. Rich, Editors USDA Forest Service GTR- PSW-191, Albany, CA 14 pp. In press.

2002 and 2003, personal communication) has provided annual summaries for avian strike mortality at a power transmission line across the Audubon National Wildlife Refuge, ND. That information, however, is site- and project-specific. The Division of Migratory Bird Management (DMBM) maintains a mortality fact sheet (prepared and periodically updated by Al Manville for public dissemination), but it is not comprehensive.

Utility Bird Mortality Tracking System

An important part of an APP is a utility's system for documenting bird mortalities and nest management activities. This system should be designed to meet the needs of the specific utility and be compatible with other data management and analysis programs. The system could utilize paper forms such as the following examples or may be an internal web-based program. The information collected should be used to help a utility conduct risk assessments by identifying avian problem areas and potential or known high risks. To protect birds and minimize outages, these data can be prioritized for corrective actions. Avian information collected by a utility should be maintained internally. Data may be required as a condition of an annual Federal permit for direct take of birds or their nests. If a Federal permit is issued, an annual report is required. The USFWS does not issue "accidental, incidental or unintentional" take permits. Bird Mortality Tracking System software developed by APLIC is available upon request for free at http://*aplic.org*.

Example 7. Dead bird/nest reporting form. This form can be used in conjunction with the Bird Mortality Tracking System software available from APLIC.

Dead Bird/Nest Form

Operations Area:

Dead Bird (circle one)		**or**	**Nest (circle one)**
Crow/magpie/raven	Eagle		Active
Hawk/falcon/osprey	Owl		Inactive
Small bird (protected)	Waterfowl		
Unknown species			

Bird Count_____

Date Found_____**Time Found**_____

Sign of Death (circle one)

Collision Electrocution Shot Unknown

County_____

Finder's Name_____

Finder's Phone_____

Line Name/Circuit No._____

Pole Identification No._____

Recommended Action (circle)

Dead Bird Actions	*Nest Actions*
Cover transformer equipment	Install nest platform
Install insulator cover(s)	Relocate nest
Install triangle(s)	Trim nest
Reframe structure	Install nest guards
Replace structure	Remove nest
Remove pole	Evaluate to determine appropriate action
De-energize	No action
Install bird flight diverters/fireflies	
Evaluate to determine appropriate action (Provide action in comments)	
Continue to monitor line (Justification required)	
No action (Justification required)	

Comments_____

Example 8. Southern California Edison's reporting and training materials.*

Avian Protection

Electrocutions

Raptors often perch or nest on transmission or distribution towers or poles. Occasionally, the birds make accidental contact between phases or phase and ground, injuring or electrocuting the bird. These electrocutions are most common on distribution or subtransmission facilities where energized conductors are close together. The number of electrocutions can be decreased by either designing the line to minimize contact between phases, or by retrofitting existing lines where necessary with a protective device that prevents this contact. Studies have demonstrated that raptors prefer certain poles for nesting and perching. By identifying these preferred poles, we can modify them, and thus greatly diminish the potential for raptor electrocutions in a cost-effective manner.

Nest Protection

In the absence of other suitable nest sites, raptors (and other protected species such as ravens) often use transmission towers and distribution poles for nesting. State and federal laws and regulations protect these nests from removal at certain times of the year without first obtaining authorization from state and federal wildlife agencies. It is important that nests not be disturbed when eggs or young birds are in them. An important note is that **there are only a few species of birds that are NOT protected by law** in SCE's service territory: **house sparrow, European starling, rock dove (common pigeon)** and certain game birds. All other species, including crows and ravens are protected by law and cannot be moved without proper authorization.

If there is a threat to power operations SCE must sometimes move an active nest (a nest with eggs or young in it). If you must move an active nest ensure environmental compliance and contact an Environmental Affairs biologist for assistance. They will make the necessary contacts with the regulatory agencies to obtain authorization for the nest to be moved.

House sparrow

European starling

Rock dove (common pigeon)

* Note: information presented in this example is specific to Southern California Edison. Contact USFWS for information on permits related to transporting eagles.

Example 8 *(con't).*

Raptor Mortality Procedures

When a dead or injured raptor is found near or on SCE equipment and facilities (e.g., poles, towers, substations) an internal report must be filed with Environmental Affairs (EA). EA will make the determination if a report to government agencies must also be filed. This is a step-by-step guide to help in the process of completing the raptor mortality report.

Both bald and golden eagles occur within SCE's service territory. Though rare, eagle electrocutions do occur on our lines, especially golden eagles. When an eagle is electrocuted, EA must be contacted immediately and special arrangements must be made for transport of the bird. It is illegal to transport eagles in the U.S. **DO NOT transport any eagle unless authorized by EA**.

1. Identify the species of raptor.
Identify the species if possible, especially to determine whether the raptor is an eagle or other raptor. Adult bald and golden eagles range anywhere from 30" to 40" in length and have a 72" to 84" wingspan while other raptors, such as red-tailed hawks are considerably smaller at about 19" in length and a 48" to 56" wingspan. See the attached guide. Whenever there is a doubt, contact Environmental Affairs (EA) for guidance. Take pictures (digital preferred) and send to EA so we can identify the bird.

If the bird is an eagle, follow the instructions directly below. For all other species, go directly to Step Number 2.

<u>Eagle electrocutions:</u>
Call or page EA immediately. You will be given guidance on the next course of action to take. It is illegal to transport eagles in the U.S. Do NOT transport an eagle unless authorized by EA. If the incident occurs after business hours, have the Edison operator connect you with EA staff.

All structures where an eagle electrocution has occurred must be corrected right away. Please contact EA for assistance in making these corrections to the structures.

After contacting EA and following the instructions given, continue to number 2.

2. Fill out a Raptor Mortality Report.
This form is available through EA or can be found on the Environmental Affairs website on SCE's Intranet. Fill out the report as completely as possible. Include maps of the area and, if possible, pictures of the structure, the bird, and the surrounding area (so we have an idea of the habitat in the vicinity of the pole.) Submit this report to EA as soon as possible after the incident.

Whenever multiple electrocutions occur within a few span lengths or on the same structure, these structures should be made raptor safe as soon as possible. Please contact EA for assistance in making these corrections to the structures.
Species other than eagles can be buried on site (away from the pole). You should have a current copy of SCE's U.S. Fish & Wildlife Permit in your vehicle in order to do this legally.

This permit requires us to maintain records of electrocutions. If you do not have a copy of this document, please contact EA.

3. Send the completed form and attachments to EA.
Send the completed form and any pictures to:
Tracey Alsobrook, Environmental Affairs, G.O. 1

Remember, ordinary people and agencies are watching our activities. We must comply with the laws that protect almost all birds in the U.S. Report all known mortalities to EA. We need your assistance to keep the Company in compliance with the laws and in protecting these natural resources.

Call us when you need help with raptor mortality procedures or raptor protection.

	PAX		PAX
Daniel C. Pearson	29562	Janet Baas	29541
Tracey Alsobrook	27547	Jill Fariss	28545

Golden Eagle

Eagles:
(e.g., golden & bald eagles)
Length: 30-40”
Wingspan: 6½ to 7 feet

Red-Tailed Hawk

Hawks:
(e.g., red-tailed & red-shouldered hawks)
Length: 15-23”
Wingspan: 4 to 4½ feet

Great-horned Owl

Owls:
(e.g., great-horned, barn & great gray owls)
Length: 16-27”
Wingspan: 3½ to 4 ½ feet

Golden Eagle Silhouette

General Hawk Silhouette

Example 8 *(con't).*

Animal/Bird Mortality Report

To: Tracey Alsobrook
Environmental Affairs (EA)
GO1, Quad 1A

Date: _____

From: Name _____
Work Location_____ PAX _____

Describe the species of the Animal or Bird that was mortally injured by SCE facilities (electrocuted/hit by a SCE vehicle, etc.).

_____
_____

If any bands or tags please return to EA or write number and agency here

_____
_____

Describe how the Animal or Bird was mortally injured by SCE facilities (bird contacted transformer bushings, etc.).

_____
_____
_____
_____

Weather Conditions (e.g. rainy and cold, sunny and warm, etc.)

_____
_____
_____

Circuit Name & Voltage_____

Specific Problem Location (e.g. Pole #/Address/Cross Streets, etc.)

_____
_____
_____

Description of Terrain and Vegetation in Area (e.g. near agriculture area, dense city area, residential housing, etc.)

_____
_____
_____

Please attach picture of the Bird or Animal if possible.

Example8 *(con't).*

Raptor/Bird Nesting Record

To: Tracey Alsobrook
Environmental Affairs
GO1, Quad 1A

Date: _____

From: Name _____
Work Location_____ PAX _____

Species of Raptor/Bird (if known) _____

Circuit Name and Voltage _____

Specific Nest Location (pole no.) _____

Condition of Nest
_____
_____

Are Eggs or Young Birds Apparent? If so, please describe.
_____
_____
_____

Description of Terrain and Vegetation in Area (e.g. near agriculture area, dense city area, residential housing, etc.)
_____
_____
_____

History of Previous Nesting on This Circuit
_____
_____
_____

History of Electrocutions/Mortality on This Circuit
_____
_____
_____

Recommendations
_____
_____
_____

Please attach picture of the Bird and/or Nest, if possible.

RISK ASSESSMENT METHODOLOGY

Thousands of utility poles occur in areas of suitable habitat for migratory birds. Because remedial actions on all poles in such areas are neither economically justifiable nor biologically necessary, a method is needed to identify configurations or locations of greatest risk. Risk assessment studies and models can be implemented to more effectively allocate resources to protect migratory birds. While risk assessment procedures will vary among utilities based on geographic scale, available data, and funding resources, included below are examples of risk assessment methods employed by different utilities.

Example 9. Risk Assessment Methodology Employed by PacifiCorp.

Reactive, preventative, and proactive measures can be adopted to minimize avian electrocutions. Reactive measures can be conducted at a structure after a mortality has occurred; preventative measures can be taken by constructing new structures to avian-safe standards in avian use areas; proactive measures can incorporate protocols to assess electrocution risk in an effort to prevent avian mortality on existing structures. Such risk assessment procedures can be useful aids when deciding where to allocate limited dollars over large geographic areas. The risk assessment methodology described in this example is based upon field surveys of poles, however, similar procedures could be followed using comparable GIS (Geographic Information System) data.

Based on a need to identify and quantify raptor electrocution risks throughout its service area, PacifiCorp implemented a program to assess electrocution risk, develop a scoring system to prioritize structures and circuits for remedial action, and create a GIS to assist in managing and analyzing spatial information regarding line locations, pole configurations, electrocutions, outages, and raptor distributions. Trained observers, while walking rights-of-way, recorded data on structure configuration, evidence of avian activity, and presence of dead birds. They searched an area encompassing 15 ft. on each side of the central line and a 25-ft. radius around each pole for carcasses, prey remains, pellets, and whitewash. At each pole, data were recorded on the pole location, habitat type, pole configuration, avian mortalities, live

species observed, evidence of raptor use, and presence of avian nests (see Example 10 for data sheet). In addition, the surveyor assessed whether or not each structure was avian-safe (based on current *Suggested Practices* standards).

Existing GIS data layers containing information on habitat type and raptor nest locations were compiled. State wildlife resource agencies, Natural Heritage Programs, universities, USFWS, Bureau of Land Management, U.S. Forest Service, and U.S. Geological Survey may serve as clearinghouses for such data. Pole locations and configurations, raptor nest site locations, habitat, and other field survey data were compiled and analyzed in ArcView GIS.

To assess the risk of electrocution, each non-avian-safe structure was assigned a score based on abundance (>50% total area) of suitable raptor habitat within a 1-km radius, evidence of raptor use, presence of raptor nests within 1 km, and presence of avian mortalities. Structures were assigned one point each for presence of suitable habitat, raptor nests, or evidence of raptor use. Structures at which non-eagle avian mortalities were documented were assigned four points. Structures with eagle mortalities were assigned five points. All scores of five or greater were lumped together in a "very high risk" category.

Using the above scoring method, non-avian-safe poles were assigned the following risk assessment scores:

Score	**Risk Assessment**
0	N/A
1	LOW RISK
2	LOW/MODERATE RISK
3	MODERATE RISK
4	HIGH RISK
5+	VERY HIGH RISK

These risk assessment scores are then used to target remedial actions. While structures with mortalities (risk scores ≥4) receive immediate attention, structures or circuits without mortalities are prioritized for ongoing remedial efforts based on their relative risk and circuit reliability. In addition to selecting poles that pose a moderate risk, other structures are selected for remedial actions based on a "common sense" review of the data. This "common sense" review applies additional data layers (i.e. outages and historical mortalities) and best

Example 9 *(con't).*

Example 9 *(con't).*

professional judgment to identify structures that warrant proactive remedial action. Below is a list of criteria that may elevate the risk scores of structures:

- Poles adjacent to mortality poles
- Poles near mortality poles with a similar configuration
- Circuits, lines, or taps where multiple mortalities have occurred
- Deadend equipment poles in remote or rural areas
- Configurations that have been documented to have a heightened risk in a particular district
- Non-raptor-safe poles in otherwise raptor-safe lines
- Non-raptor-safe poles adjacent to poles with perch discouragers
- Incomplete or improper installation of existing avian protection devices
- Circuits or lines with a history of bird-caused or unknown-cause outages
- Poles that pose other safety or reliability risks

Once all poles are identified, a comprehensive remedial action plan is developed with the appropriate service district that identifies a course of action, timeline, and resources required. The location and number of poles retrofitted, and associated costs are documented. Future monitoring is conducted to document the effectiveness of these efforts and to identify other areas that may require action. In addition, this methodology can be used to research electrocution risks associated with particular configurations or species. This risk assessment database is updated and refined as new information becomes available. For additional information on this risk assessment methodology, contact Jim Burruss (jim.burruss.@pacificorp.com) or Sherry Liguori (sherry.liguori@pacificorp.com).

Example 10. PacifiCorp's Risk Assessment Data Sheet.

Avian Electrocution Risk Assessment
Data Sheet

Date_____

Observer(s) _____

Sheet _____ **of** _____

IF A MORTALITY WAS DOCUMENTED, CHECK HERE _____

Operations Area _____**Circuit**_____**Line**_____

HABITAT TYPE (Circle. If more than one apply, indicate percent of each.)

Grassland/ meadow Cropland/Pasture Scrub/shrub Barren Riparian Residential/developed Deciduous forest Coniferous forest

Wet meadow Mudflat Open water Other:_____

POLE LOCATION/IDENTIFICATION:

Structure Identification Number_____

GPS Coordinates: _____ Coordinate System: _____ Units: meters feet

POLE CONFIGURATION (Circle one. If pole does not match any shown, draw it on other side of sheet.)

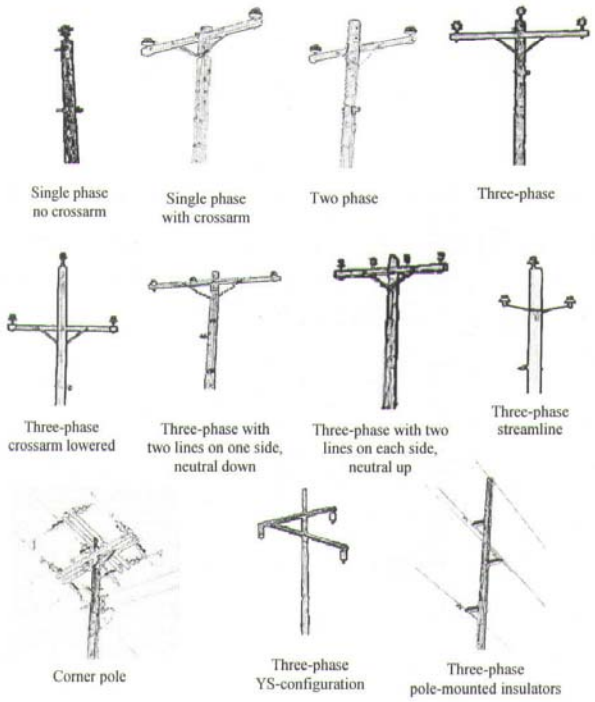

Is structure raptor safe? Yes No

Total no. energized conductors_____

(if corner pole or underbuilt, indicate number phases in each direction, i.e. 3-3 or 3-2-1)

Number of transformers_____

Are there exposed parts? (circle all that apply)

transformers, capacitors, cutouts, arresters, jumper wires

Crossarm material: wood metal fiberglass

Crossarm brace material: wood metal fiberglass

Location of ground wire:

Below crossarm At or above crossarm

Circle all that are present: Hose Bushing cap

Arrester cap Cutout cover Insulator cover

Perch guard Perch Down-guy insulator

Other protective devices:_____

Circle if present: Pellets Whitewash Prey remains

Are there live raptors, mortalities, nests, or pole damage? No Yes* (*if yes, continue on other side)

Example 10 *(con't).*

POLE CONDITION (Circle all that apply)

Broken insulator Broken crossarm Leaking transformer Broken/burned/leaning pole Broken guywire

Other: _____

MORTALITIES/INJURIES

Status: dead injured **Number individuals** _____ **Distance to nearest pole (ft.)**_____

Species (circle one): Red-tailed Hawk Ferruginous Hawk Swainson's Hawk Broad-winged Hawk Harris's Hawk

Red-shouldered Hawk Rough-legged Hawk Golden Eagle Bald Eagle Osprey Peregrine Falcon Prairie Falcon

Merlin American Kestrel Great Horned Owl Barn Owl Common Raven American Crow Great Blue Heron

Other: _____

Cause of death/injury: Unknown Electrocution Collision Shot Roadkill Other: _____

Evidence of electrocution: Burnt feathers Burnt talons Burnt bill Exit wound Other: _____

Status of carcass/remains: Buried Collected Left on-site **Band number** (if applicable) _____

Directions _____

Photo number _____ **Camera number** _____

Recommended remedial action _____

_____

LIVE SPECIES OBSERVED

Species _____ **Number of individuals** _____ **Behavior** _____

Species _____ **Number of individuals** _____ **Behavior** _____

Species _____ **Number of individuals** _____ **Behavior** _____

Nest? _____ **Species** _____ **Is nest active?** Yes No

Nest location: Tree Cliff Ground Utility pole Other: _____

Pole Diagram:

NOTES _____

_____

_____

_____

Record Tracking:

USFWS Notification _____ Date _____

Bird Mortality Tracking System Entry _____ Date _____

Remedial Action Status _____ Date _____

MORTALITY REDUCTION MEASURES

A utility can have the greatest impact on reducing avian mortality by focusing its efforts in a cost-effective manner on the areas that pose the greatest risk to migratory birds. Therefore, as a general matter, mortality reduction plans should include a method for evaluating the risks posed to migratory birds in a manner that identifies areas and issues of particular concern. A risk assessment will often begin with an evaluation of available data addressing areas of high avian use, avian mortality, nesting problems, established flyways, adjacent wetlands, prey populations, perch availability, and other factors that can increase avian interactions with utility facilities. The assessment may also include outage and circuit reliability information. Mortality reduction plans should also utilize biological and electrical design information to prioritize poles most in need of repair and identify causes of avian mortality and benefits to utility customers. A successful APP and mortality reduction plan require management support as well as the following:

- assessment of facilities to identify risks;
- allocation of resources;
- standards for new or retrofit construction;
- budget for Operation and Maintenance (O&M) and Capital fixes;
- system for tracking remedial actions and associated costs;
- timely implementation of remedial measures;
- positive working relationship with agencies.

Mortality reduction plans may include a strategy that incorporates preventative, reactive and proactive measures that focus on issues, risks, and reliability commitments facing a utility (Figure 13). An example of how this multi-faceted approach might be used is as follows:

- **Preventative**: Construct all new or rebuilt lines in high avian use areas to Company avian-safe standards. Ensure APP is in compliance with applicable laws, regulations and permits.

- **Reactive**: Document bird mortalities and problem nests; conduct assessment of problems and apply remedial measures where appropriate. Notify resource agencies in accordance with Company's permits and policy.
- **Proactive**: Provide resources and training to improve employee's knowledge and awareness. Partner with organizations that conduct research on effects of bird interactions with power lines. Evaluate electrocution and collision risks of existing lines in high avian use areas and modify structures where appropriate.
- **Collaborative**: Collaboration with USFWS and State agencies on electrocutions reported and remedial actions undertaken. Annually review the APP in the context of risk assessment and electrocution and collision incidents and modify as appropriate, ideally with agency input.

Modification of existing facilities may be deemed necessary when dead and/or injured birds are found, high-risk lines are identified, or concerns of legal compliance are at issue. "Problem poles" or high-risk lines may be identified through bird mortality records, field surveys, or notifications from agency representatives or concerned customers. System reliability concerns due to bird interactions may also result in requests from field operations staff. Retrofitting to prevent electrocutions could include: 1) covering jumper wires, conductors and equipment; 2) discouraging perching in unsafe areas; 3) reframing; or 4) replacing a structure. Retrofitting to prevent collisions may include: 1) installing markers to enhance the visibility of lines; 2) managing habitats to reduce the likelihood of birds crossing lines during daily flights; or 3) managing human activity near collision risk areas to prevent flushing. Implementing preventative, reactive, and proactive measures to reduce avian mortality can benefit a utility through reduced long-term costs, improved reliability, positive public and agency relations, and conservation of migratory birds.

Figure 13. Roles of preventative, proactive, and reactive measures in a mortality risk reduction plan.

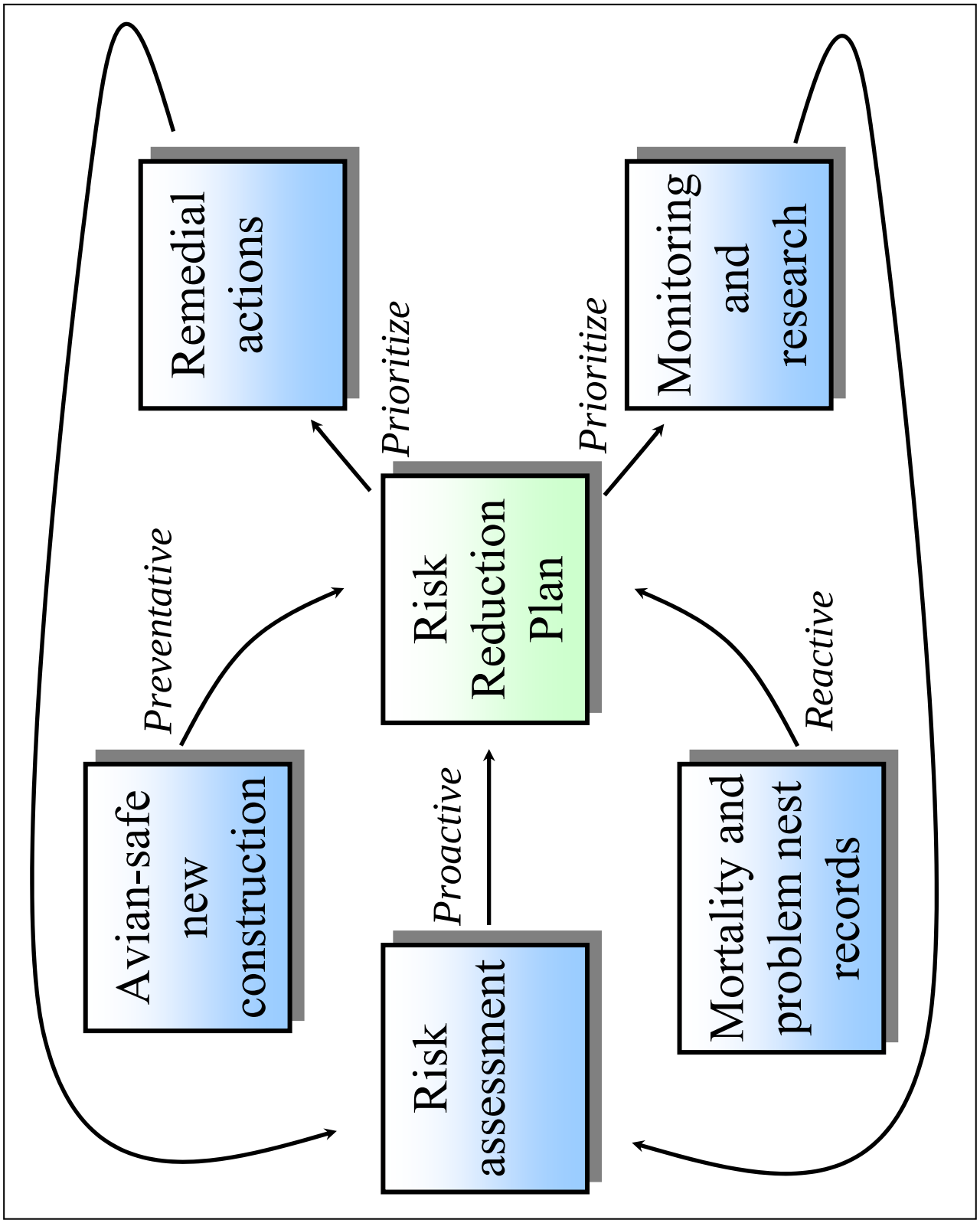

AVIAN ENHANCEMENT OPTIONS

While an APP will include measures to reduce avian mortality associated with electrical operations, it can also include opportunities to enhance avian populations through the creation of nest platforms, habitat improvements for migratory birds, or cooperative efforts with agencies or organizations. USFWS and State wildlife resources agencies, as well as other experts, can be consulted for recommendations on habitat enhancement projects. Nest platforms can be erected on poles for birds such as osprey, eagles, hawks, owls, herons, and cormorants, etc. (Figure 14). In addition, nest boxes can be erected for cavity-nesting species such as bluebirds, swallows, chickadees, wrens, and others. Such boxes may also benefit bats and flying squirrels. Construction designs for bird boxes can be found at http://50birds.com. Commercially-made nest boxes and platforms may also be available from local nature centers or specialty stores. The construction, maintenance, and monitoring of nest boxes can be done in conjunction with volunteers, such as scouts, or avian conservation organizations (see Key Resources for a list of bird conservation organizations/centers). Such collaborative efforts are excellent opportunities to educate the public about the company's avian protection plan and its partnerships with wildlife conservation agencies and organizations.

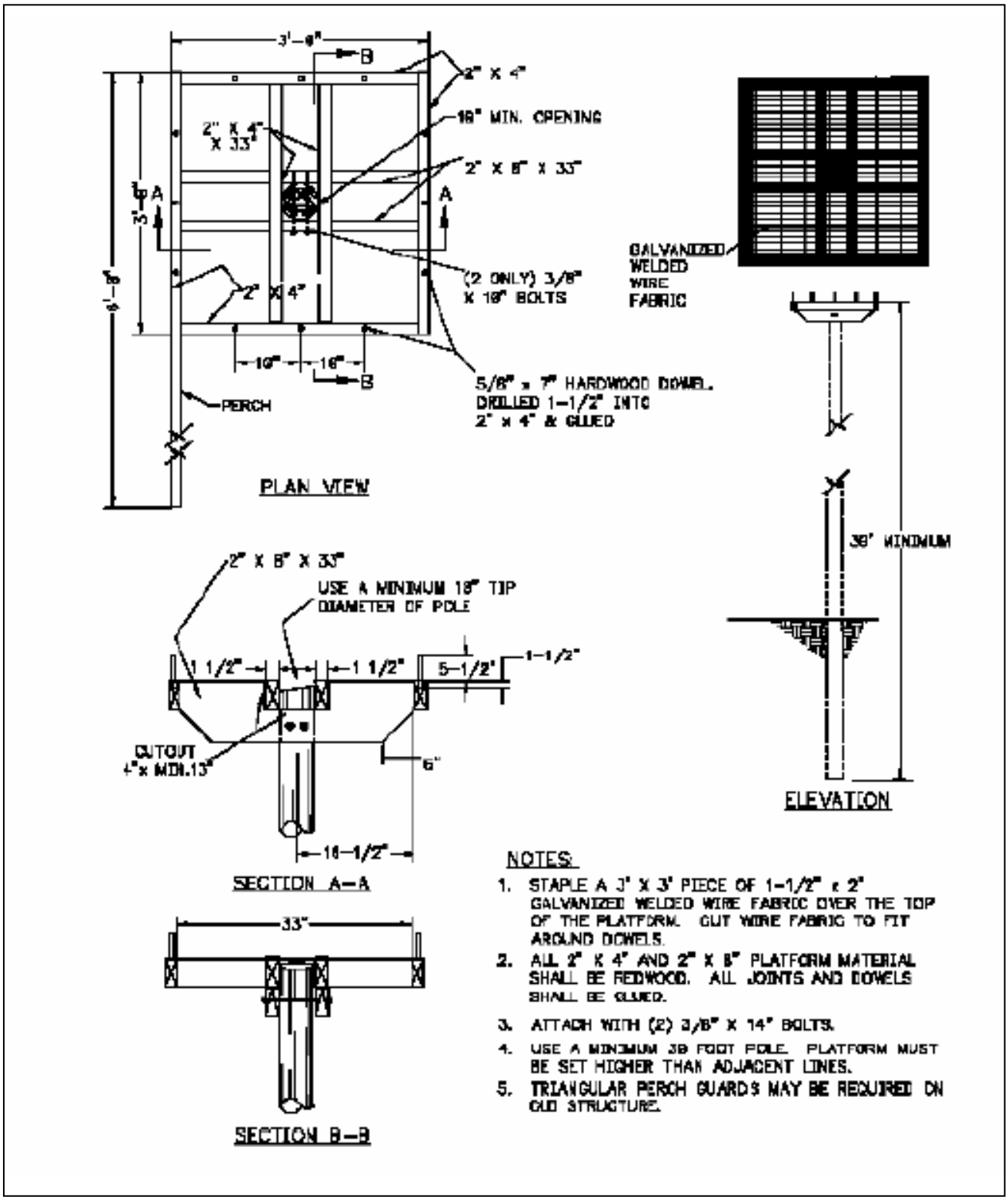

Figure 14. Raptor nest platform, pole mounted.

QUALITY CONTROL

A quality control mechanism can and should be incorporated into an APP to evaluate the effectiveness of a company's avian protection procedures. Some examples of quality control assessments include:

- assessing remedial action techniques through follow-up surveys to evaluate their effectiveness in reducing avian mortality;
- assessing avian protection devices to identify products preferred for avian protection as well as ease of application and durability;
- assessing mortality reporting procedures to ensure that discoveries of avian mortalities are properly documented;
- assessing response to avian mortalities to ensure that appropriate actions are taken in a timely manner;
- assessing compliance with company procedures to ensure that personnel are consistently following company methods for avian-safe construction, mortality reporting, nest management, etc.;
- assessing public and agency opinions on system reliability and avian protection.

The quality control component of an APP is an ongoing process. Information gathered during assessments of existing practices should be used to improve the effectiveness and timeliness of avian protection efforts, which, in turn, can help to reduce costs associated with such efforts.

PUBLIC AWARENESS

A public awareness program can be an integral part of an APP. This program can be used to enhance general public awareness and support for an electric utility's APP. It allows stakeholders such as government agencies, Tribes, non-profit organizations, wildlife rehabilitators and other interested parties an opportunity to provide input to the decision-making process, enabling all parties to work openly and collaboratively towards recommendations that can be effectively implemented. This collaboration often leads to improved relationships within the community and to more efficient and positive projects. The relationships developed through this process may also encourage the public to report bird mortalities and encourage them to seek assistance for birds that have been injured in power line related accidents.

Effectively communicating the components involved in an APP can be done through a variety of public outreach tools including fact sheets, newsletters, brochures, videos, websites and speaker bureau presentations. These tools can also be used to record the successes of an APP, thereby documenting the utility and electric industry's efforts to reduce avian mortalities. The goal of these outreach efforts is to convey to the public that electric utilities are responsible stewards of the environment working cooperatively with wildlife agencies towards reducing avian mortalities while continuing to provide safe, reliable, affordable electricity to their customers.

Many utilities have specific examples of their environmental stewardship and innovative ways they have taken into consideration reducing environmental impacts in their business decisions. A company’s cooperative and innovative efforts to minimize avian mortalities should be shared with the public and resource agencies.

KEY RESOURCES

U.S. Fish and Wildlife Service Migratory Bird Permit Regional Offices 67
U.S. Fish and Wildlife Service Office of Law Enforcement 69
Other Resource Agency Contacts 71
State Agencies 74
Bird Conservation Organizations/Centers/Resources 77
Wildlife Rehabilitation Resources 82
Utility Resources 83

U.S. Fish and Wildlife Service Migratory Bird Permit Regional Offices

Region 1: (California, Hawaii, Idaho, Nevada, Oregon, Washington, Guam, CNMI, American Samoa)
U.S. Fish and Wildlife Service Migratory Bird Permit Office
911 N.E. 11th Avenue
Portland, OR 97232-4181
Tel. (503) 872-2715. Fax (503) 231-2019.
Email: permitsR1MB@fws.gov

Region 2: (Arizona, New Mexico, Oklahoma, Texas)
U.S. Fish and Wildlife Service Migratory Bird Permit Office
P.O. Box 709
Albuquerque, NM 87103
Tel. (505) 248-7882. Fax (505) 248-7885.
Email: permitsR2MB@fws.gov

Region 3: (Iowa, Illinois, Indiana, Minnesota, Missouri, Michigan, Ohio, Wisconsin)
U.S. Fish and Wildlife Service Migratory Bird Permit Office
One Federal Drive
Fort Snelling, MN 55111
Tel. (612) 713-5436. Fax (612) 713-5393
Email: permitsR3MB@fws.gov

Region 4: (Alabama, Arkansas, Florida, Georgia, Kentucky, Louisiana, Mississippi, North Carolina, South Carolina, Tennessee, Virgin Islands, Puerto Rico)
U.S. Fish and Wildlife Service Migratory Bird Permit Office
P.O. Box 49208
Atlanta, GA 30359
Tel. (404) 679-7070. Fax (404) 679-4180
Email: permitsR4MB@fws.gov

Region 5: (Connecticut, District of Columbia, Delaware, Maine, Maryland, Massachusetts, New Hampshire, New Jersey, New York, Pennsylvania, Rhode Island, Virginia, Vermont, West Virginia)
U.S. Fish and Wildlife Service Migratory Bird Permit Office
P.O. Box 779
Hadley, MA 01035-0779
Tel. (413) 253-8643. Fax (413) 253-8424
Email: permitsR5MB@fws.gov

Region 6: (Colorado, Kansas, Montana, North Dakota, Nebraska, South Dakota, Utah, Wyoming)
U.S. Fish and Wildlife Service Migratory Bird Permit Office
P.O. Box 25486 DFC (60154)
Denver, CO 80225-0486
Tel. (303) 236-8171. Fax (303) 236-8017
Email: permitsR6MB@fws.gov

Region 7: (Alaska)
U.S. Fish and Wildlife Service Migratory Bird Permit Office
1011 E. Tudor Road
Anchorage, AK 99503
Tel. (907) 786-3693. Fax (907) 786-3641
Email permits: R7MB@fws.gov

U.S. Fish and Wildlife Service Office of Law Enforcement

National Headquarters:
Office of Law Enforcement
U. S. Fish and Wildlife Service
4401 North Fairfax Drive,
MS-LE-3000
Arlington, Virginia, USA 22203
Telephone: 703-358-1949
Fax: 703-358-2271

Regional Offices:

Pacific Region (1): California, Hawaii, Idaho, Nevada, Oregon, Washington, Guam, CNMI, American Samoa)
U. S. Fish & Wildlife Service
Office of Law Enforcement
911 N. E. 11th Avenue
Portland, Oregon, USA 97232-4171
Phone: (503) 231-6125 Fax: (503) 231-6197

Southwest Region (2): Arizona, New Mexico, Oklahoma, Texas
U. S. Fish & Wildlife Service
Office of Law Enforcement
P.O. Box 329
Albuquerque, New Mexico, USA 87103
Phone: (505) 248-7889 Fax: (505) 248-7899

Great Lakes - Big Rivers Region (3): Illinois, Indiana, Iowa, Michigan, Minnesota, Missouri, Ohio, Wisconsin
U. S. Fish & Wildlife Service
Office of Law Enforcement
One Federal Drive
Fort Snelling, Minnesota, USA 55111-0045
Phone: (612) 713-5320 Fax: (612) 713-5283

Southeast Region (4): Alabama, Arkansas, Florida, Georgia, Kentucky, Louisiana, Mississippi, North Carolina, South Carolina, Tennessee, Puerto Rico and the Virgin Islands
U. S. Fish & Wildlife Service
Office of Law Enforcement
P.O. Box 49226
Atlanta, Georgia, USA 30359
Phone: (404) 679-7057 Fax: (404) 679-7065

Northeast Region (5): Connecticut, Delaware, Maine, Maryland, Massachusetts, New Hampshire, New Jersey, New York, Pennsylvania, Rhode Island, Vermont, Virginia, West Virginia,
U. S. Fish & Wildlife Service
Office of Law Enforcement
300 Westgate Center Drive
Hadley, Massachusetts, USA 01035
Phone: (413) 253-8274 Fax: (413) 253-8459

Mountain-Prairie Region (6): Colorado, Kansas, Montana, Nebraska, North Dakota, South Dakota, Utah, Wyoming
U. S. Fish & Wildlife Service
Office of Law Enforcement
P.O. Box 25486 - DFC
Denver, Colorado, USA 80225
Phone: (303) 236-7540 Fax: (303) 236-7901

Alaska Region (7): Alaska
U. S. Fish & Wildlife Service
Office of Law Enforcement
1011 E. Tudor Road, Mail Stop 151
Anchorage, Alaska, USA 99503-6199
Phone: (907)786-3311 Fax: (907)786-3313

Other Resource Agency Contacts

BLM Snake River Birds of Prey National Conservation Area

- The Snake River Birds of Prey NCA is home to the largest concentration of nesting raptors in North America.
- http://id.blm.gov/bopnca/index.html

Canadian Wildlife Service

- http://cws-scf.ec.gc.ca/index_e.cfm

Code of Federal Regulations (CFR) websites

- Main CFR webpage
  - http://gpoaccess.gov/cfr/
- List of migratory birds, 50CFR10.13
  - http://a257.g.akamaitech.net/7/257/2422/01dec20031500/edocket.access.gpo.gov/cfr_2003/octqtr/50cfr10.13.htm
- General permit procedures, 50CFR13
  - http://access.gpo.gov/nara/cfr/waisidx_03/50cfr13_03.html
- Endangered and threatened wildlife and plants, 50CFR17
  - http://access.gpo.gov/nara/cfr/waisidx_03/50cfrv2_03.html
- Migratory bird permits, 50CFR21
  - http://access.gpo.gov/nara/cfr/waisidx_03/50cfr21_03.html
- Eagle permits, 50CFR22
  - http://access.gpo.gov/nara/cfr/waisidx_03/50cfr22_03.html

International Association of Fish and Wildlife Agencies

- The International Association of Fish and Wildlife Agencies (IAFWA) was founded in 1902 as a quasi-governmental organization of public agencies charged with the protection and management of North America's fish and wildlife resources. The Association has been a key organization in promoting sound resource management and strengthening federal, state, and private cooperation in protecting and managing fish and wildlife and their habitats in the public interest. The Association's governmental members include the fish and wildlife agencies of the states, provinces, and federal governments of the U.S. and Canada. All 50 states are members.
- http://iafwa.org

National Biological Information Infrastructure

- The National Biological Information Infrastructure (NBII) is a broad, collaborative program to provide increased access to data and information on the nation's biological resources. The NBII links diverse, high-quality biological databases, information products, and analytical tools maintained by NBII partners and other contributors in government agencies, academic institutions, non-government organizations, and private industry. NBII partners and collaborators also work on new standards, tools, and technologies that make it easier to find,

integrate, and apply biological resources information. Resource managers, scientists, educators, and the general public use the NBII to answer a wide range of questions related to the management, use, or conservation of this nation's biological resources.

- http://birdcon.nbii.gov

NOAA Photo Library

- Public domain images for download
- http://photolib.noaa.gov/index.html

U.S. Fish and Wildlife Service

- http://fws.gov

U.S. Fish and Wildlife Service National Eagle Repository

- http://mountain-prairie.fws.gov/law/eagle
  U. S. Fish and Wildlife Service
  National Eagle Repository
  Rocky Mountain Arsenal, Building 619
  Commerce City, Colorado 80022
  phone: (303) 287-2110
  fax: (303) 287-1570

U.S. Fish and Wildlife Service National Image Library

- Public domain images for download
- http://images.fws.gov

USGS Bird Banding Laboratory

- http://pwrc.usgs.gov/bbl/

USGS Patuxent Bird Identification InfoCenter

- Presents photographs, songs, videos, identification tips, maps, and life history information for North American birds.
- http://mbr-pwrc.usgs.gov/id/framlst/framlst.html

USGS Patuxent Wildlife Research Center

- Patuxent's mission is to excel in wildlife and natural resource science, providing the information needed to better manage the nation's biological resources
- http://pwrc.usgs.gov

USGS Raptor Information System

- The Raptor Information System (RIS) is a computerized literature retrieval system. It deals with raptor management, human impacts on raptors, the mitigation of adverse impacts, and basic raptor biology (with an emphasis on population dynamics and predation). The RIS may be the largest collection of literature on birds of prey found anywhere in the world, with approximately

30,000 references on raptor biology and management. RIS staff members regularly update the files and accompanying data base with recently published and/or newly acquired references on raptors. The collection includes reprints of published papers as well as a significant amount of "gray literature" in the form of popular articles, theses, dissertations, unpublished government reports, and progress reports.
http://ris.wr.usgs.gov

State Agencies

Alabama Division of Wildlife and Freshwater Fisheries
- http://dcnr.state.al.us/agfd/index.html

Alaska Department of Fish and Game
- http://adfg.state.ak.us

Arkansas Game and Fish Commission
- http://agfc.com

Arizona Game and Fish Department
- http://gf.state.az.us

California Department of Fish and Game
- http://dfg.ca.gov

Colorado Division of Wildlife
- http://wildlife.state.co.us

Connecticut Bureau of National Resources, Wildlife Division
- http://dep.state.ct.us/burnatr/wildlife/wdhome.htm

Delaware Division of Fish and Wildlife
- http://dnrec.state.de.us/fw

Florida Fish and Wildlife Conservation Commission
- http://floridaconservation.org

Georgia Division of Wildlife Resources
- http://georgiawildlife.dnr.state.ga.us

Hawaii Department of Land and Natural Resources
- http://state.hi.us/dlnr

Iowa Department of Natural Resources
- http://iowadnr.com

Idaho Fish and Game
- http://state.id.us/fishgame

Illinois Department of Natural Resources
- http://dnr.state.il.us

Indiana Department of Natural Resources
- http://in.gov/dnr

Kansas Department of Wildlife and Parks
- http://kdwp.state.ks.us

Kentucky Department of Fish and Wildlife
- http://kdfwr.state.ky.us

Louisiana Department of Wildlife and Fisheries
- http://wlf.state.la.us/apps/netgear/page1.asp

Massachusetts Division of Fisheries and Wildlife
- http://state.ma.us/dfwele/dfw/dfw_toc.htm

Maryland Department of Natural Resources
- http://dnr.state.md.us

Maine Department of Inland Fisheries and Wildlife
- http://state.me.us/ifw

Michigan Department of Natural Resources
- http://michigan.gov/dnr

Minnesota Department of Natural Resources
- http://dnr.state.mn.us/index.html

Missouri Department of Conservation
- http://conservation.state.mo.us

Mississippi Department of Wildlife, Fisheries and Parks
- http://mdwfp.com

Montana Department of Fish, Wildlife and Parks
- http://fwp.state.mt.us

Nebraska Game and Parks Commission
- http://ngpc.state.ne.us/homepage.html

Nevada Department of Wildlife
- http://ndow.org

New Hampshire Fish and Game Department
- http://wildlife.state.nh.us

New Jersey Division of Fish and Wildlife
- http://state.nj.us/dep/fgw

New Mexico Game and Fish Department
- http://gmfsh.state.nm.us

New York Division of Fish, Wildlife and Marine Resources
- http://dec.state.ny.us/website/dfwmr/index.html

North Carolina Wildlife Resources
- http://ncwildlife.org

North Dakota Game and Fish Department
- http://state.nd.us/gnf

Ohio Division of Wildlife
- http://ohiodnr.com/wildlife/default.htm

Oklahoma Department of Wildlife Conservation
- http://wildlifedepartment.com

Oregon Department of Fish and Wildlife
- http://dfw.state.or.us

Pennsylvania Fish and Boat Commission
- http://pgc.state.pa.us

Rhode Island Division of Fish and Wildlife
- http://state.ri.us/dem/programs/bnatres/fishwild/index.htm

South Carolina Department of Natural Resources
- http://water.dnr.state.sc.us

South Dakota Department of Game, Fish and Parks
- http://state.sd.us/gfp

Tennessee Wildlife Resources Agency
- http://state.tn.us/twra/index.html

Texas Parks and Wildlife Department
- http://tpwd.state.tx.us

Utah Division of Wildlife Resources
- http://wildlife.utah.gov

Virginia Department of Game and Inland Fisheries
- http://dgif.state.va.us

Vermont Department of Fish and Wildlife
- http://vtfishandwildlife.com

Washington Department of Fish and Wildlife
- http://wdfw.wa.gov

Wisconsin Department of Natural Resources
- http://dnr.state.wi.us

West Virginia Division of Natural Resources
- http://wvdnr.gov

Wyoming Game and Fish Department
- http://gf.state.wy.us

Bird Conservation Organizations/Centers/Resources
(Includes organization's mission statement/description followed by website)

Alaska Bird Observatory
- The Alaska Bird Observatory is an Alaska nonprofit corporation. The mission of ABO is to advance the appreciation, understanding, and conservation of birds and their habitats through research and education.
- http://alaskabird.org

American Bird Conservancy
- American Bird Conservancy (ABC) is a 501(c)3 not-for-profit organization, whose mission is to conserve wild birds and their habitats throughout the Americas. It is the only U.S.-based, group dedicated solely to overcoming the greatest threats facing birds in the Western Hemisphere.
- http://abcbirds.org

Cornell Lab of Ornithology
- The Lab is a nonprofit membership institution whose mission is to interpret and conserve the earth's biological diversity through research, education, and citizen science focused on birds. Our programs work with citizen scientists, government and nongovernment agencies across North America and beyond.
- http://birds.cornell.edu

50 Birds
- Wood bird house designs for more than 50 North American birds
- http://50birds.com/Default.htm

Gulf Coast Bird Observatory
- The mission of the Gulf Coast Bird Observatory is the study and conservation of birds and their habitat in and around the Gulf of Mexico. Our purpose is to be a catalyst for bird conservation through individual and community partnerships and the sharing of expertise and knowledge.
- http://gcbo.org

Hawk Mountain Sanctuary Association
- Hawk Mountain's mission is to foster the conservation of birds of prey worldwide and to create a better understanding of, and further the conservation of, the natural environment, particularly the Central Appalachian region.
- http://hawkmountain.org

Hawks Aloft, Inc.
- Hawks Aloft, Inc. (HAI) was founded in February of 1994 in Albuquerque, New Mexico. Our mission is to conserve indigenous wild birds and their habitats through research and public education. HAI projects take place almost entirely within the state of New Mexico. We have become a leader in providing quality

education programs and field research. Using live raptors as educational aids, our naturalists reach more than 30,000 students annually. Our long-term research projects monitor raptor and songbird populations, as they relate to land management practices.
- http://hawksaloft.org

HawkWatch International
- Mission: To monitor and protect hawks, eagles, and other birds of prey and their environment through research, education, and conservation.
- http://hawkwatch.org

Idaho Bird Observatory
- IBO's Mission: To contribute to the conservation of western migratory birds and their habitats through cooperative research and public education.
- http://boisestate.edu/biology/ibo

Klamath Bird Observatory
- A nonprofit research and educational organization
- http://klamathbird.org/kbohome.htlm

Massachusetts Audubon Society
- Massachusetts Audubon Society is the largest conservation organization in New England, concentrating its efforts on protecting the nature of Massachusetts for people and wildlife. Mass Audubon protects more than 30,000 acres of conservation land, conducts educational programs for 250,000 children and adults annually, and advocates for sound environmental policies at the local, state, and federal levels. Established in 1896 and supported by 68,000 member households, Mass Audubon maintains 42 wildlife sanctuaries that are open to the public and serve as the base for its conservation, education, and advocacy work across the state.
- http://massaudubon.org

Montana Raptor Conservation Center
- Mission: Montana Raptor Conservation Center was founded in response to the rapid development of southwest Montana and resulting negative conflicts between humans and birds of prey. Through education, habitat enhancement, research, and the rehabilitation and release of injured birds of prey, our mission is to conserve and restore raptors, as well as other avian species that are endangered, threatened or of special concern.
- http://montanaraptor.org

National Audubon Society
- Audubon's mission is to conserve and restore natural ecosystems, focusing on birds, other wildlife, and their habitats for the benefit of humanity and the earth's biological diversity.

- http://audubon.org

National Fish and Wildlife Foundation

- The National Fish and Wildlife Foundation conserves healthy populations of fish, wildlife and plants, on land and in the sea, through creative and respectful partnerships, sustainable solutions, and better education. The Foundation meets these goals by awarding matching grants to projects benefiting conservation education, habitat protection and restoration, and natural resource management.
- http://nfwf.org

The Nature Conservancy

- Mission: To preserve the plants, animals and natural communities that represent the diversity of life on Earth by protecting the lands and waters they need to survive.
- http://nature.org

New Jersey Audubon Society

- The New Jersey Audubon Society fosters environmental awareness and a conservation ethic among New Jersey's citizens; protects New Jersey's birds, mammals, other animals, and plants, especially endangered and threatened species; and promotes preservation of New Jersey's valuable natural habitats.
- http://njaudubon.org

North American Bird Conservation Initiative (NABCI)

- US NABCI Vision: Populations and habitats of North America's birds are protected, restored, and enhanced through coordinated efforts at international, national, regional, state, and local levels, guided by sound science and effective management. US NABCI Goal: To deliver the full spectrum of bird conservation through regionally based, biologically driven, landscape-oriented partnerships.
- http://nabci-us.org

Partners in Flight

- Partners in Flight (PIF) is a cooperative effort involving partnerships among federal, state and local government agencies, philanthropic foundations, professional organizations, conservation groups, industry, the academic community, and private individuals. PIF's goal is to focus resources on the improvement of monitoring and inventory, research, management, and education programs involving birds and their habitats.
- http://partnersinflight.org

Partners in Flight – Canada

- http://cws-scf.ec.gc.ca/birds/lb_ot_e.cfm

Partners in Flight – International

- http://partnersinflight.org/pubs/latangara.htm

The Peregrine Fund/World Center for Birds of Prey

- Established in 1970, The Peregrine Fund works nationally and internationally, working to conserve birds of prey in nature. We conserve nature by achieving results - results restoring species in jeopardy, conserving habitat, educating students, training conservationists, providing factual information to the public, and by accomplishing good science. The World Center for Birds of Prey in Boise, Idaho is The Peregrine Fund's world headquarters. At the World Center we propagate birds of prey for release to the wild. Research and educational programs are also conducted.
- http://peregrinefund.org

Point Reyes Bird Observatory

- PRBO Conservation Science is dedicated to conserving birds, other wildlife, and ecosystems through innovative scientific research and outreach. Founded in 1965 as Point Reyes Bird Observatory, our 120 staff and seasonal biologists study birds to protect and enhance biodiversity in marine, terrestrial and wetland systems in western North America.
- http://prbo.org

The Raptor Center

- The Raptor Center at the University of Minnesota College of Veterinary Medicine specializes in the medical care, rehabilitation, and conservation of birds of prey. Working with about 30 eagles, hawks, owls, and falcons that are permanent residents, we reach 250,000 people each year through educational programs and events. The essence of our mission is to strengthen the bond between humans and birds, to improve the quality of life for both, and to contribute to the preservation of the natural world.
- http://raptor.cvm.umn.edu

Rocky Mountain Bird Observatory (formerly Colorado Bird Observatory)

- RMBO was founded in 1988 to address a bird conservation and related public education need in the western U.S. Our mission is the conservation of Rocky Mountain and Great Plains birds through research and public education. We accomplish our mission through numerous research and public education programs which have dual goals: to conserve birds and bird habitat, and to increase people's understanding of birds--how they interact with humans, what habitats they use, and what factors threaten their survival.
- http://rmbo.org

Smithsonian Migratory Bird Center

- Dedicated to fostering greater understanding, appreciation, and protection of the grand phenomenon of bird migration.
- http://nationalzoo.si.edu/ConservationAndScience/MigratoryBirds

Southeast Arizona Bird Observatory

- The Southeastern Arizona Bird Observatory (SABO) is a non-profit organization dedicated to the conservation of the birds of southeastern Arizona, their habitats and the diversity of species that share those habitats through research, monitoring and public education.
- http://sabo.org

Vermont Institute of Natural Science

- Protecting Vermont's natural heritage through education and research designed to engage individuals and communities in the active care of their environment.
- http://vinsweb.org

Whitefish Point Bird Observatory

- WPBO is a non-profit membership organization established in 1978 to document and study the birds in the Great Lakes Region, with special emphasis on migration.
- http://wpbo.org

Wildlife Rehabilitation Resources

How to contact a wildlife rehabilitator

- http://tc.umn.edu/~devo0028/contact.htm

National Wildlife Rehabilitators Association

- http://nwrawildlife.org

Wildlife International

- http://wildlife-international.org

The Wildlife Rehabilitation Information Directory

- http://tc.umn.edu/~devo0028/

Utility Resources

Avian Power Line Interaction Committee (APLIC)
- http://aplic.org

Edison Electric Institute (EEI)
- http://eei.org

Electric Power Research Institute (EPRI)
- http://epri.com

Institute of Electrical and Electronics Engineers (IEEE)
- http://ieee.org

National Rural Electric Cooperative Association (NRECA)
- http://nreca.org

Rural Utilities Service (RUS)
- http://usda.gov/rus

V. LIST OF ACRONYMS

APLIC – Avian Power Line Interaction Committee

APP – Avian Protection Plan

BGEPA – Bald and Golden Eagle Protection Act

BMTS – Bird Mortality Tracking System

DMBM – Division of Migratory Bird Management

EEI – Edison Electric Institute

EPRI – Electric Power Research Institute

ESA – Endangered Species Act

GIS – Geographic Information System

HCP – Habitat Conservation Plan

MBTA – Migratory Bird Treaty Act

NESC – National Electric Safety Code

NMFS – National Marine Fisheries Service

NRECA – National Rural Electric Cooperative Association

REA – Rural Electricification Association (currently RUS)

RUS – Rural Utilities Service

USFWS – U.S. Fish and Wildlife Service